L

November 2000

Attention Service Manage

Elise Service Notes Manu

Dear Sir/Madam,

Please find the enclosed u
manual A111T0327J, whi
conditioning/heater system
that this new section does r
'97/'98 with a.c. only (no he
Insert this package into you

Discard

Introduction page 1/2
(stamped '2000/03')

Please ensure that your ma
are made aware of the n
available under part numbe
any copies of the manual he

Yours faithfully

Dave Massey – Senior Tec

A111UPsn

Hethel, Norwich, Norfolk, 1
Registered Office: Norwich, Norfolk, NR14 8

Air Distribution Airflow
The distribution control knob provides four settings as follows:

Face Level:
Turned fully counterclockwise, all the airflow is directed to the four face level vents, each of which may be individually adjusted via a volume control thumbwheel and direction control knob.
No solenoids are energised. When engine vacuum is generated, the screen flap closes.

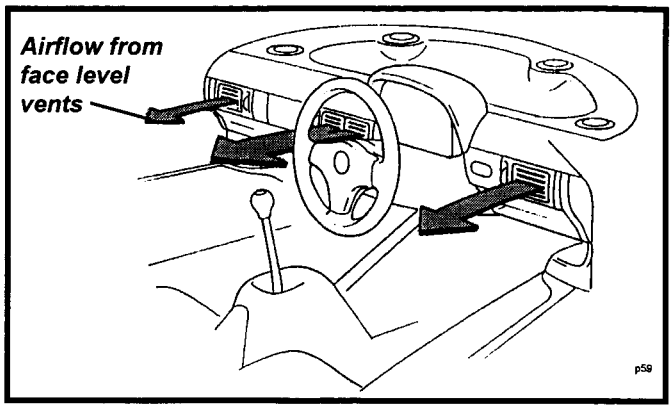

Footwell:
At this position, air is supplied to the footwell vents and to the face level vents. For maximum footwell ventilation, close off the face level vents via their individual thumbwheels.
Footwell solenoid energised; vacuum opens footwell flap.

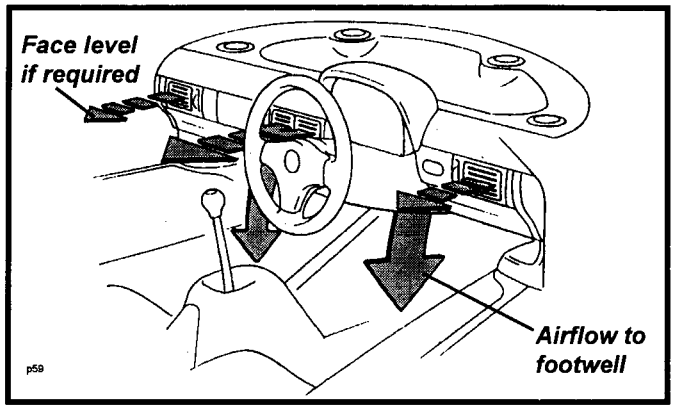

Footwell & Screen:
At this position, air is supplied to the windscreen, footwell, and face level vents. Each of the windscreen outlet vents may be manually rotated and directed as required.
To boost airflow from the windscreen and footwell vents, close off the face level vents using their individual thumbwheels.
Footwell and screen solenoids energised; vacuum opens footwell flap; vacuum shut off from screen flap which opens.

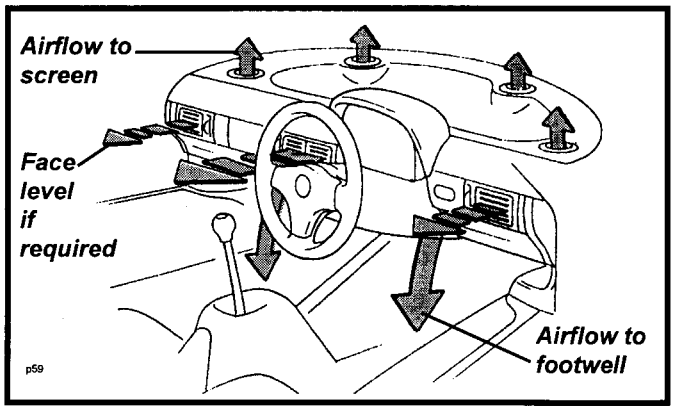

Windscreen:
At this position, airflow is directed to the windscreen and face level vents. Each of the windscreen outlet vents may be manually rotated and directed as required.
For maximum defrost performance, select full heat and fan speed, and close off the face level vents using their individual thumbwheels. Turn the screen vent vanes to align with the screen, and open to about 45° angle to aim at the glass.
Screen solenoid energised; vacuum shut off from screen flap which opens.

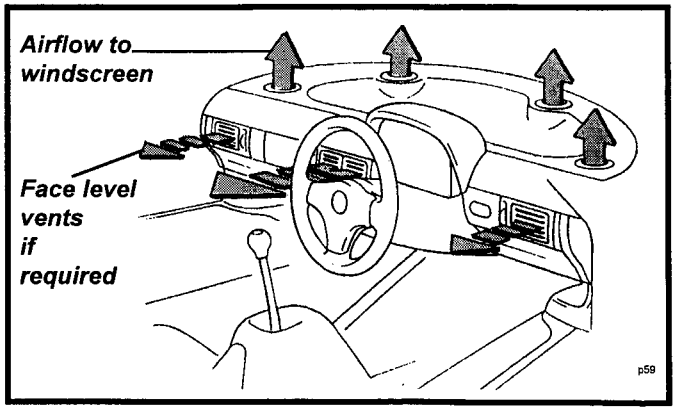

PH.3 - VACUUM CONTROL SYSTEM

Engine vacuum, tapped from the intake plenum, is used to operate the screen, footwell and re-circ. flaps, and the water valve. The vacuum supply to each of the actuators is controlled by separate solenoid valves mounted on a bracket above the pedal box, with the solenoids switched by the climate distribution control. In order to maintain flap operation during periods of high manifold pressure or after engine switch off, a vacuum reservoir with integral non-return valve is mounted within the RH rear wheelarch, accessible after removal of the wheelarch liner. The sector rack and pinion temperature control is equipped with an electrical micro-switch, closed at the full cold position to operate a solenoid valve and supply the water valve actuator. Note that the default position of the flaps (no electrical power or vacuum supply) is; screen flap open, footwell flap closed, fresh air intake open. The water valve default is open.

The vacuum pipes from reservoir to solenoid valves, and from water valve soleinoid valve to actuator, run along the outside of the RH chassis siderail. Note that the vacuum supply to the three identical solenoid valves is to the central of the two ports on each valve. The wiring harness to each of the three identical solenoid valves is colour coded with tape, with yellow (water valve) outermost, red (re-circ.) central, and blue (footwell) innermost. The fourth solenoid is of a different design to operate the screen flap.

Vacuum Schematic

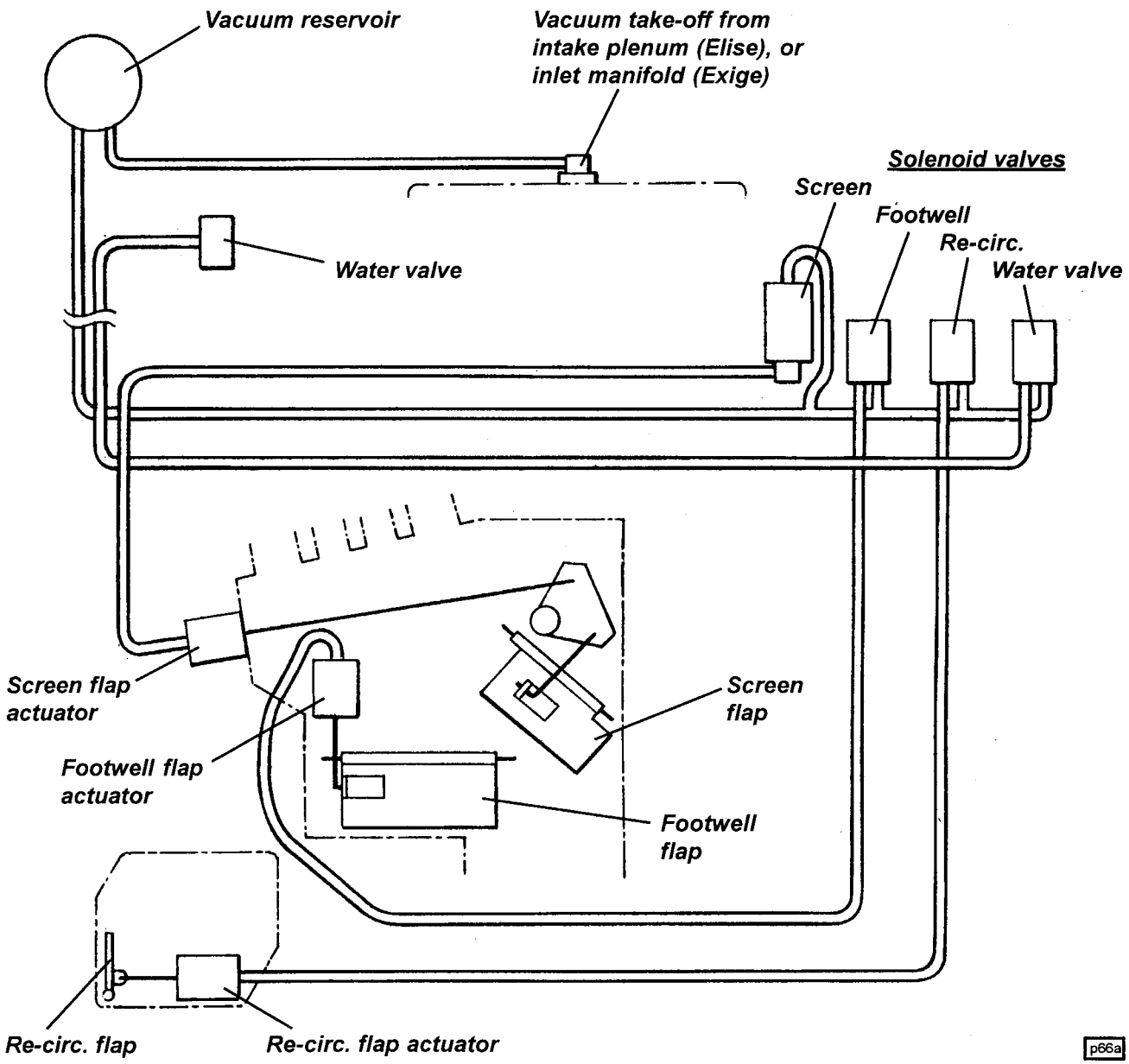

LHD shown

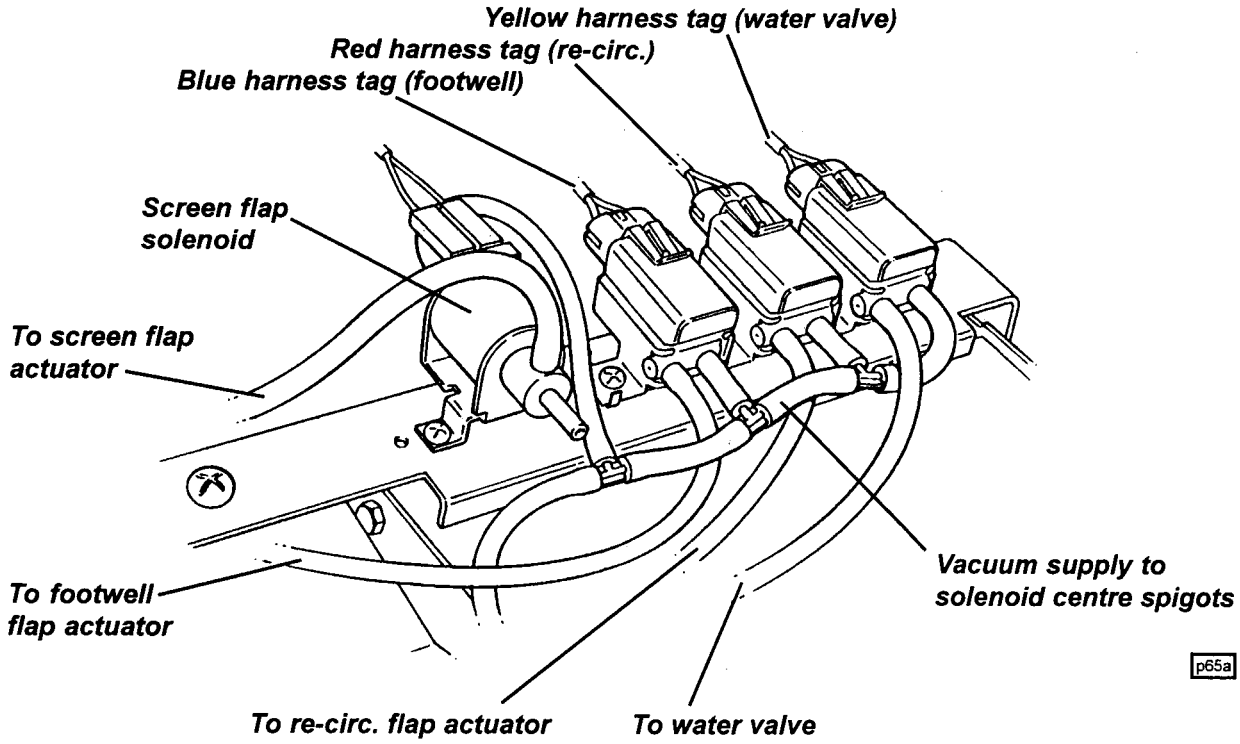

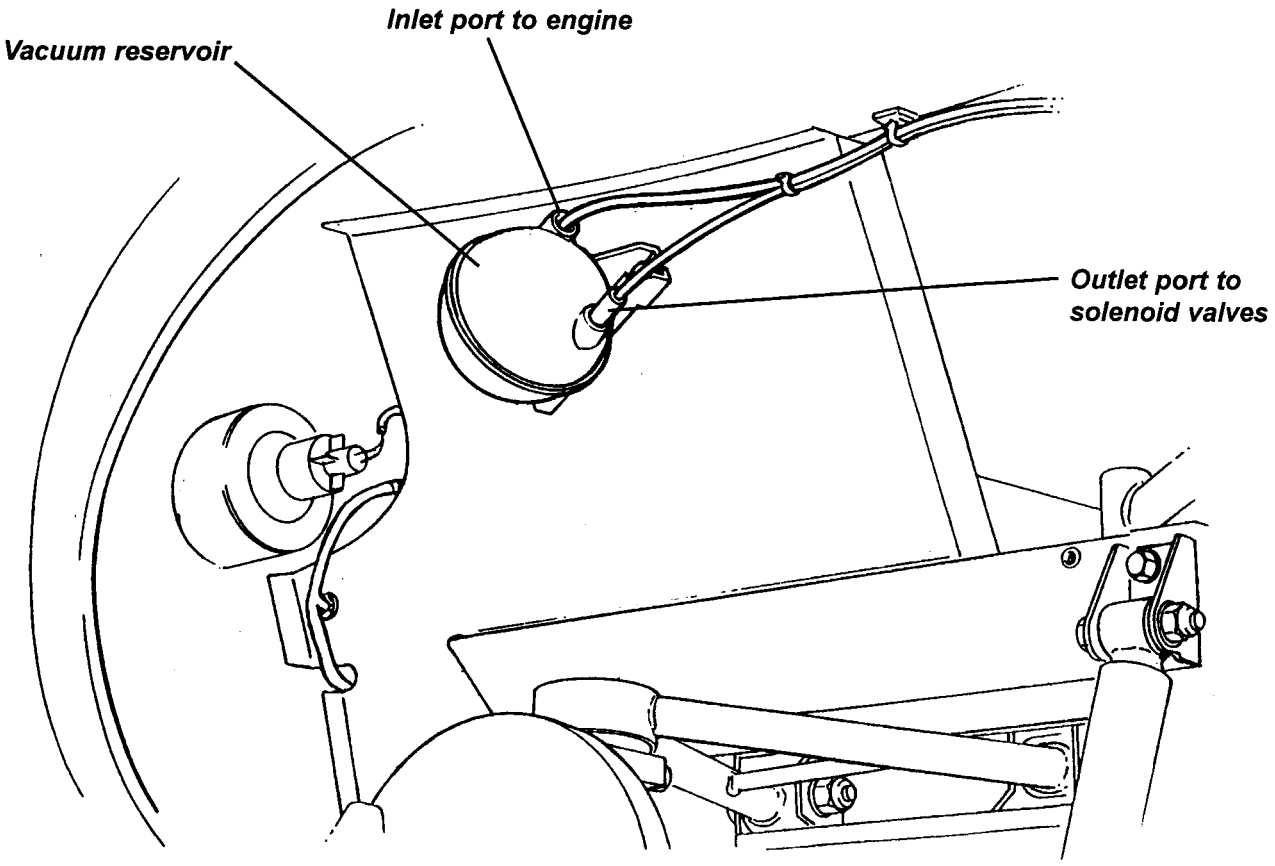

Shown with RH rear wheelarch liner removed

Distribution Control Details

The distribution control is an electrical selector switch with one input terminal and using 3 output terminals. Switch functionality is as follows:

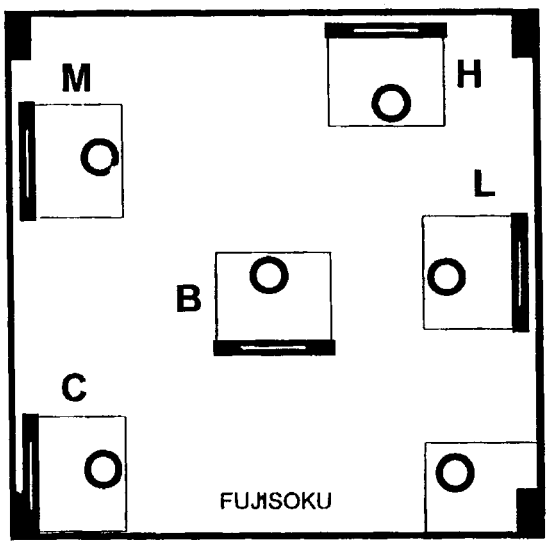

p86

Switch terminal	*Cable colour*	*Function*	*Fed at switch position*
C	Green	Ignition supply	All
L	Green & Black	Footwell flap	Footwell
M	Green & Purple	Footwell & sceen flaps	Footwell & Screen
H	Green & Orange	Screen flap	Screen

Note that diodes in the green/purple circuit isolate the footwell and screen flap actuator circuits from each other at control positions other than footwell/screen.

PH.4 - A.C. CLUTCH & COOLING FAN CONTROL

A.C. Control

When the a.c. request button on the fascia is pressed, the signal is routed through the evaporator thermostatic switch (to ensure no icing) and the trinary switch (to check acceptable refrigerant pressure) before feeding the ECM input. Before energising the compressor clutch, the ECM first adjusts the idle air control valve to compensate for the increased engine load. Compressor switching will be inhibited under certain conditions, including: engine cranking; wide open throttle; excessive coolant temperature.

Cooling Fan Control - Elise

Elise models with a.c. are fitted with two radiator fans, one switched by the engine ECM on the basis of coolant temperature (as for non-a.c. cars), with the second fan switched via the a.c. request push switch.

Cooling Fan Control - Exige

Exige models with a.c. are fitted with two radiator fans controlled by the engine ECM and a relay module (mounted in the front services compartment), and operate always as a pair, either;

- off;
- switched in series for half speed operation;
- switched in parallel for full speed operation.

Under normal conditions, the fans operate only at vehicle speeds below 25 mph (40 km/h). When coolant temperature reaches approx. 102°C, the fans operate at half speed, with full speed operation switching in if coolant should reach 108°C. When the trinary switch on the receiver-drier indicates that a.c. is operating and that condenser cooling is required, the fans will operate at fast speed regardless of coolant temperature.

Engine Malfunction

If the engine ECM detects certain types of engine malfunction, including misfire, or anomolies in coolant temperature or intake air temperature, the cooling fans will be switched to full speed as an engine protection strategy.

PH.5 - COOLANT RE-CIRCULATION PUMP

In order to control engine temperature in conditions of heat soak after engine switch off, a.c. cars are equipped with an electric pump to circulate coolant through the engine and prevent localised boiling. The pump is mounted at the rear of the cylinder head in the radiator by-pass circuit and when operating, pumps coolant from the engine outlet elbow back into the engine at the thermostat housing. A smaller flow will also occur through the radiator and heater circuits.

Pump Control

Elise: The re-circ. pump will operate with ignition off, when coolant temperature as sensed by a thermal switch in the radiator feed pipe at the bottom front of the engine bay, is above approx. 100°C. A relay/timer module mounted in the front services compartment, limits the operating time to 20 minutes.

Exige: The re-circ. pump is controlled by the engine management ECM and will operate the pump, with ignition off, at temperatures over 105°C (off at 100°C) as indicated by the engine coolant temperature sensor. A timer function limits pump operation time to 20 minutes.

PH.6 - REFRIGERANT HANDLING

The system is charged with 0.88 kg of refrigerant HFC R134a, and the following precautions MUST ALWAYS BE OBSERVED.

1. On no account should refrigerant ever be discharged to atmosphere - use a refrigerant recovery/recycling station in accordance with the manufacturer's instructions.

2. Standard R134a 'quick fit' connectors are provided in the compressor suction and discharge pipes at the right hand front of the engine bay;
   - the low pressure vapour line port is fitted in the pipe between the evaporator and compressor.
   - the high pressure liquid line port is fitted in the pipe between the compressor and condenser.

3. Heavy concentrations of refrigerant vapour can produce toxic gas if exposed to a naked flame. The gas can also attack metal.

4. Refrigerant drums must never be left open - always ensure the caps are securely fitted.

5. Never transport drums of refrigerant in the passenger compartment of a car.

6. Never expose refrigerant drums to high temperature.

7. Never weld or use a steam cleaner in close proximity to any part of the air conditioning system.

8. Never expose the eyes to vapourised or liquid refrigerant - ALWAYS wear safety goggles and gloves when handling refrigerant.

PH.7 - REFRIGERANT PIPEWORK PRECAUTIONS

The following precautions must be observed when carrying out any work on the refrigerant pipework: Before disconnecting any refrigerant pipework, the refrigerant must first be recovered using suitable equipment connected to the service valves at the right hand front of the engine bay. Ensure that the equipment is suitable for R134a.

1. All replacement components and flexible end connections are sealed when new, and should only be opened IMMEDIATELY PRIOR TO FITTING, AND AT ROOM TEMPERATURE, to prevent condensation of any moisture which may enter when the sealing is removed.

2. Pipes, flexible end connections and components, must be capped immediately they are opened to prevent the ingress of moisture and/or dirt.

3. The receiver-drier should be the LAST component to be connected, to ensure optimum dehydration and maximum moisture protection of the system.

4. All joints should be coated with refrigeration oil before making any connections, to aid seating.

5. Great care must be taken to prevent damage to the pipe fittings and connections, since due to the high pressures involved, a leak can be caused by the slightest imperfection. Always use two spanners of the correct size when releasing or tightening any pipe joint so that the fixed part of the union may be prevented from twisting and damaging the component. This is especially important with the aluminium condenser.

6. All pipes and hoses must be free from any kinking. The efficiency of the system can be impaired by a single kink, or restriction. Flexible hoses should not be bent to a radius which is less than ten times the diameter of the hose.

Recommended Pipework Tightening Torques

Ref.	*Description*	*Qty*	*Thread*	*Torque*	*Washer*
1	Compressor to mounting bracket	3	M10	43-47	no
2	Belt tensioner pulley securing nut	1	M8	25 Nm	as supplied
3	Pipe union to compressor	2	M8	23-27 Nm	no
4	Pipe support bracket	1	M5	5-6 Nm	yes
5	Pipes to connector blocks	4	M6	7-9 Nm	yes
6	Elbow pipe, condenser inlet	2	3/4-16 UNF	25-30 Nm	n/a
7	Condenser outlet pipe to condenser and receiver-drier	2	5/8-18 UNF	20-25 Nm	n/a
8	Trinary switch to receiver-drier	1	3/8-24 UNF	10-13 Nm	n/a
9	Outlet pipe to receiver-drier	1	5/8-18 UNF	20-25 Nm	n/a
10	Clamp plate - pipes to exp. valve	1	M6	7-9 Nm	yes
11	Clamp plate - exp. valve to evaporator	2	M5	5-6 Nm	no

All 'O' rings and connector union threads should be coated with refrigerant oil (Sanden SP20 or Seiko SK20) prior to assembly. (Gloves should be worn when handling refrigeration oil)

REFRIGERANT PIPEWORK TORQUE CHART

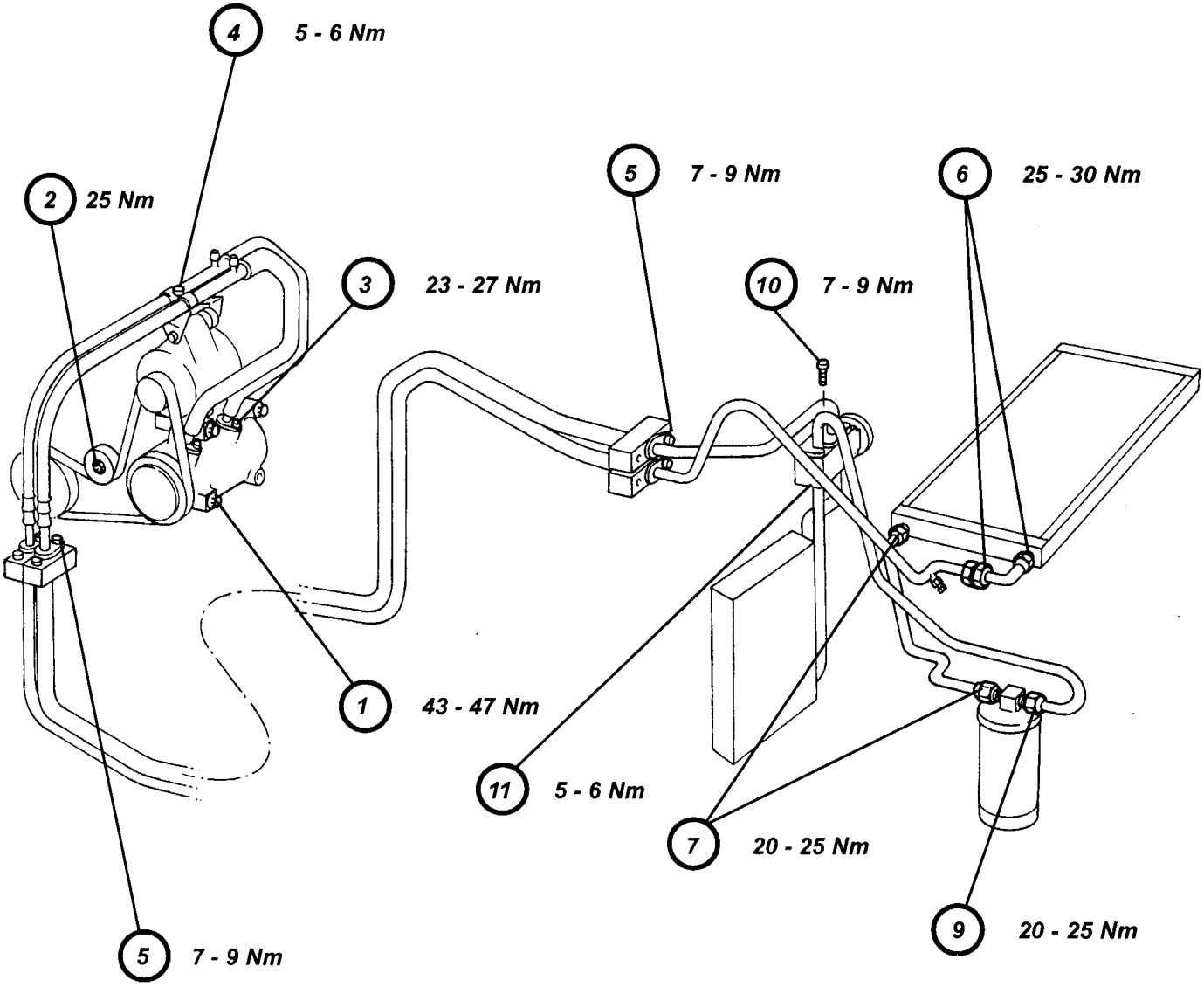

p75a

PH.8 - REFRIGERANT OIL

The internal working parts of the compressor are lubricated by refrigerant oil. This is a special type of oil which has an affinity with the refrigerant, such that a proportion of the oil circulates with the refrigerant, around the whole system. Under normal operating conditions, the oil never needs changing or replenishing, and if the correct procedure for system depressurisation and re-charging is followed, minimal oil will be lost from the system during these operations. If, however, the system suffers a major leak or sudden de-pressurisation, most of the oil held in suspension will be lost as the refrigerant escapes, necessitating the addition of a specified quantity of oil to the compressor on re-assembly (see section PH.7).

If a refrigeration component is to be replaced, the removed item will contain a certain amount of oil, and a corresponding amount of new oil must be added to the system on re-assembly:

Condenser;	30 cm^3
Evaporator;	30 cm^3
Any major pipe or hose;	10 cm^3
Receiver-drier;	30 cm^3

Approved Oils

Use a refrigerant oil from only the following list:
Seiko SK-20
Unipart SK-20
Idemitsu SK-20

Refrigerant oil absorbs water and should not be exposed to the atmosphere for any longer than is strictly necessary to perform the operation. Never return decanted oil back into the storage container.

PH.9 - COMPRESSOR

Drive Belt Tension

The compressor is mounted at the front side of the engine, and shares a multi-rib drive belt with the alternator which is mounted above it. A jockey wheel runs against the smooth back of the belt, and provides a means of tension adjustment.

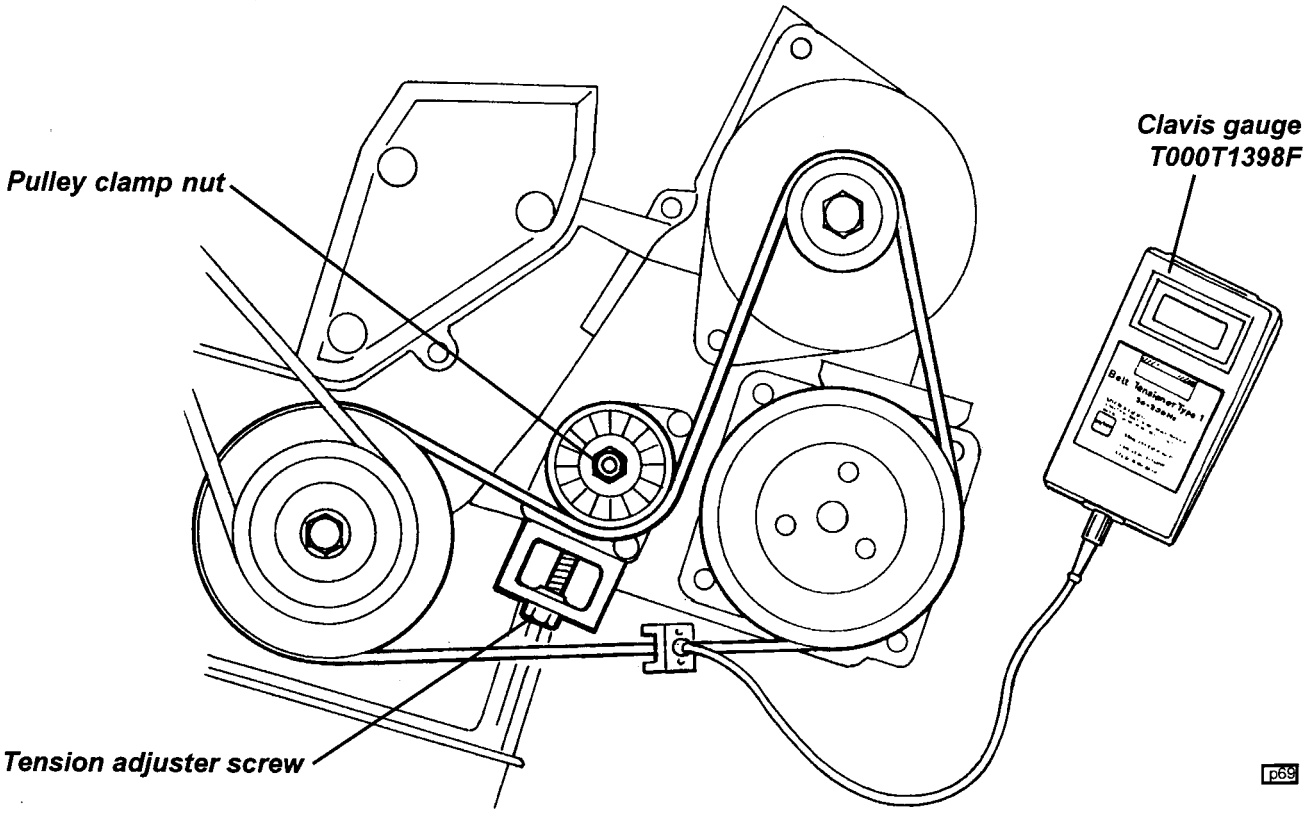

Tension should be checked using a Clavis frequency meter T000T1398F on ***only*** the lowermost belt run. Specification: 135 to 150 Hz

Alternatively, the belt is correctly adjusted when a force of 10 kg (firm finger pressure) at the centre of the lowermost belt run produces a one way deflection of 9 - 10 mm.

To adjust the belt, slacken the tensioner pulley nut and move the pulley using the adjuster bolt, turning clockwise to increase tension. When tension is correct, tighten the pulley nut to 25 Nm and recheck tension.

Compressor Removal

1. Recover the refrigerant using equipment connected to the service ports at the right hand front of the engine bay.

2. Remove the RH rear wheel and engine bay undertray (if fitted). Access to the compressor mounting bolts and pipe connections will be improved if the engine mounting tie bar at the back of the engine is released, and the engine is moved backwards slightly.

3. Release the pipe support clamp adjacent to the service ports, and from beneath the car, release the suction and discharge pipes from the compressor and immediately cap the pipes and compressor ports to prevent ingress of dirt and moisture.

4. Disconnect the compressor clutch cable.

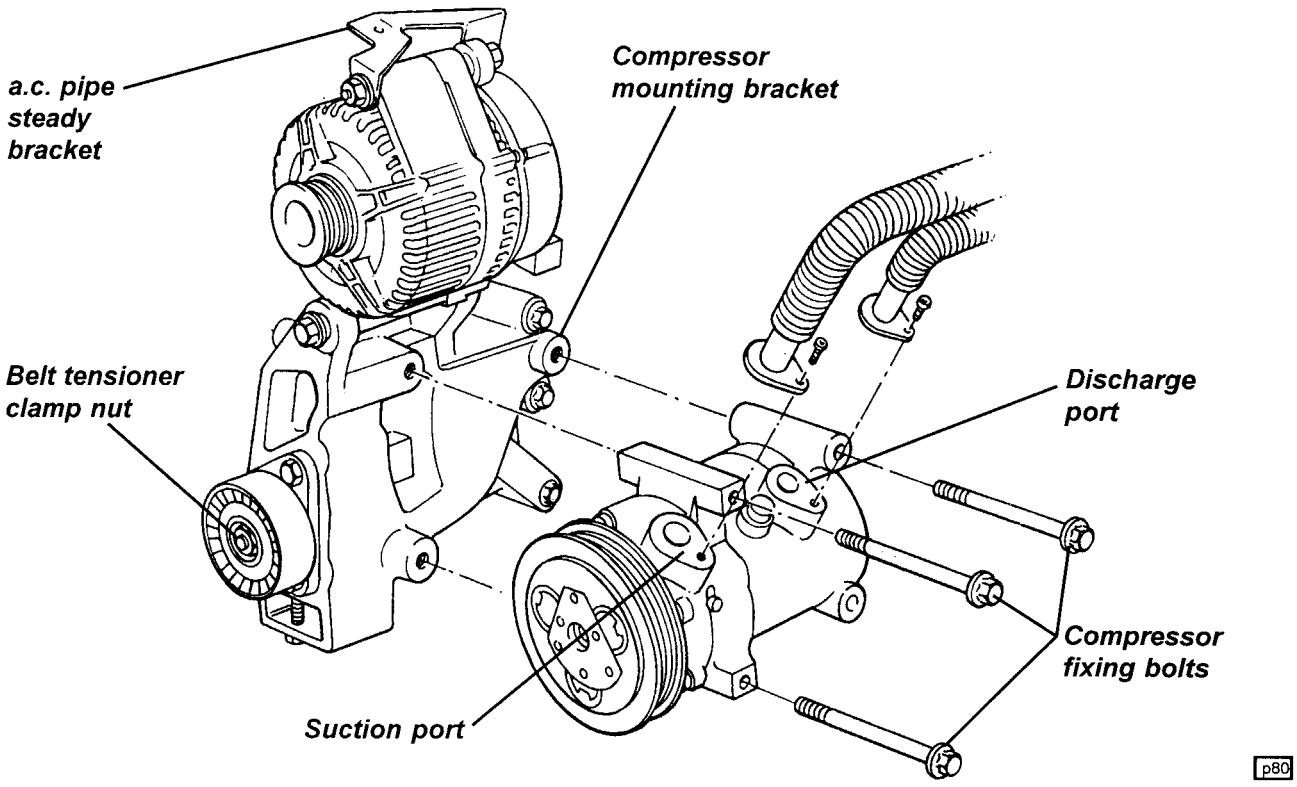

5. Slacken the belt tensioner pulley nut and release belt tension. Release the three M10 compressor fixing bolts, and remove the compressor from the engine. Retain the compressor for oil quantity measurement if a new unit is to be fitted.

Oil Quantity Adjustment Prior to Compressor Refitment

Refitting Existing Compressor

i) If the existing compressor is to be refitted after normal refrigerant recovery has been performed, a quantity of oil equivalent to that recovered must be added to that already held in the compressor.

ii) If the system has suffered a rapid discharge, caused for example by accident damage, most of the refrigerant oil will have been lost. Drain and measure the remaining oil from the compressor by removing the drain plug and rotating the clutch plate. Add 170 cm^3 of new refrigerant oil (see above) to the compressor before refitment.

Fitting New Compressor

New compressors are sealed and pressurised with nitrogen gas. The sealing caps should be removed only immediately prior to compressor fitment, at which time the gas pressure should be heard to escape as a cap is slowly released. New compressors are supplied with an oil fill of 170 cm^3.

i) If normal refrigerant recovery has been performed, the required oil level in the new compressor must be calculated, and the appropriate quantity drained off:
   - Drain and measure the oil quantity in the ***OLD*** compressor by removing the drain plug and rotating the clutch plate. Quantity = X cm^3
   - Calculate the quantity of oil (Q cm^3) to be drained from the new compressor using the formula: Q cm^3 = 170 - (X + 20)
   - Remove the drain plug from the NEW compressor, and drain this quantity of oil before refitting and tightening the plug.

ii) If the system has suffered a rapid discharge, caused for example by accident damage, most of the refrigerant oil will have been lost. In this case, the 170 cm^3 of oil contained in the new compressor is to be retained.

Compressor Fitment

1. Fit the compressor to the engine with the drive belt positioned, and secure with the three M10 bolts; Tighten to 43 - 47 Nm. Tension the drive belt as detailed above.

2. Using new 'O' rings lubricated with an approved refrigerant oil, fit the two refrigerant pipes to the compressor and tighten the fixing screws to 23 - 27 Nm. Secure the pipe clamp adjacent to the service ports.

3. Connect the compressor clutch cable.

4. Recharge the system with R134a refrigerant.

PH.10 - CONDENSER

The condenser is mounted beneath the engine cooling radiator in the front services compartment. To replace the condenser the radiator mounting panel must be removed complete with radiator, condenser and cooling fans:

1. Remove the front clamshell (see section BP).

2. Release the fixings securing the water shield to the top rear edge of the radiator mounting panel, and withdraw the shield.

3. Drain the coolant and disconnect the feed and return hoses from the radiator.

4. Recover the refrigerant using suitable equipment connected to the service ports at the right hand front of the engine bay.

5. Unplug the fan harness connector.

6. Using two spanners on each connection to avoid twisting the union, release the two refrigerant pipes from the condenser and immediately cap both the pipes and the condenser unions to prevent the ingress of dirt and moisture.

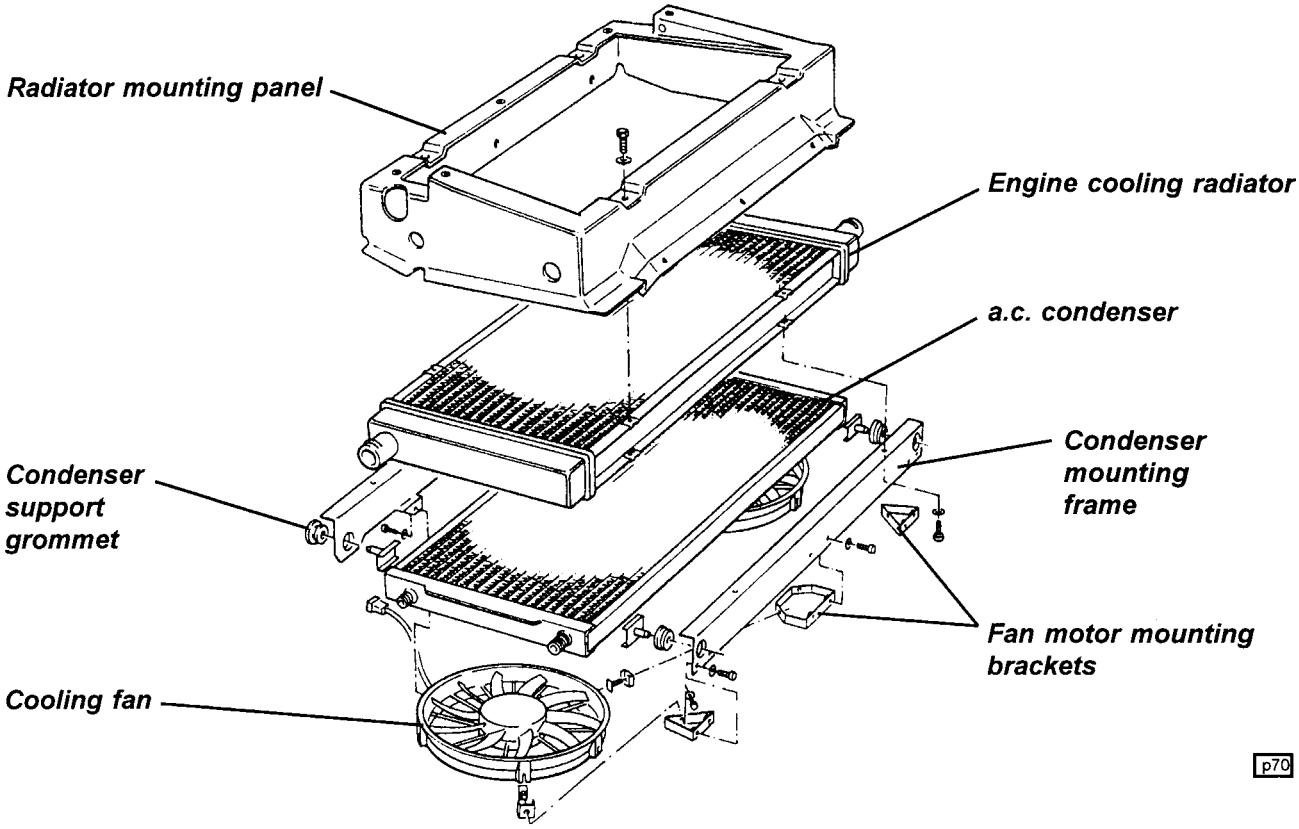

7. Release the radiator mounting panel from the crash structure and lift away the complete assembly.

8. To remove the condenser from the pack, remove the cooling fans and release the condenser mounting frame from the radiator. The condenser is supported in the frame by four spigots in rubber grommets.

9. Refit the condenser in reverse order to removal, with the following notes:
   - If a new condenser is to be fitted, add 30 cm^3 of approved refrigerant oil to the system.
   - Use new 'O' rings on the pipe connections, and lubricate with refrigerant oil.
   - Using two spanners, tighten the condenser inlet connection to 25 - 30 Nm.
   - Using two spanners, tighten the condenser outlet connection to 20 - 25 Nm.
   - Recharge the system with 0.88 kg of R134a.
   - Refill the cooling system (see sub-section KF.3).

PH.11 - RECEIVER-DRIER

If the system has been open to atmosphere for any length of time, e.g. following accident damage or a burst hose or damaged component, the receiver-drier unit must be renewed, and should be the last component to be fitted, and uncapped only immediately prior to connection and recharging.

The receiver-drier is mounted on the RH side of the front crash structure, and houses the trianry switch. If the switch or receiver-drier is to be replaced, the refrigerant must first be recovered using suitable equipment connected to the service ports at the right hand front of the engine bay.

- Cap all pipes and ports immediately after disconnection to prevent the ingress of dirt and moisture.
- When reconnecting the pipes, use new 'O' rings coated in an approved refrigerant oil, and tighten to 20 - 25 Nm.
- Tighten the trianry switch to 10 - 13 Nm.

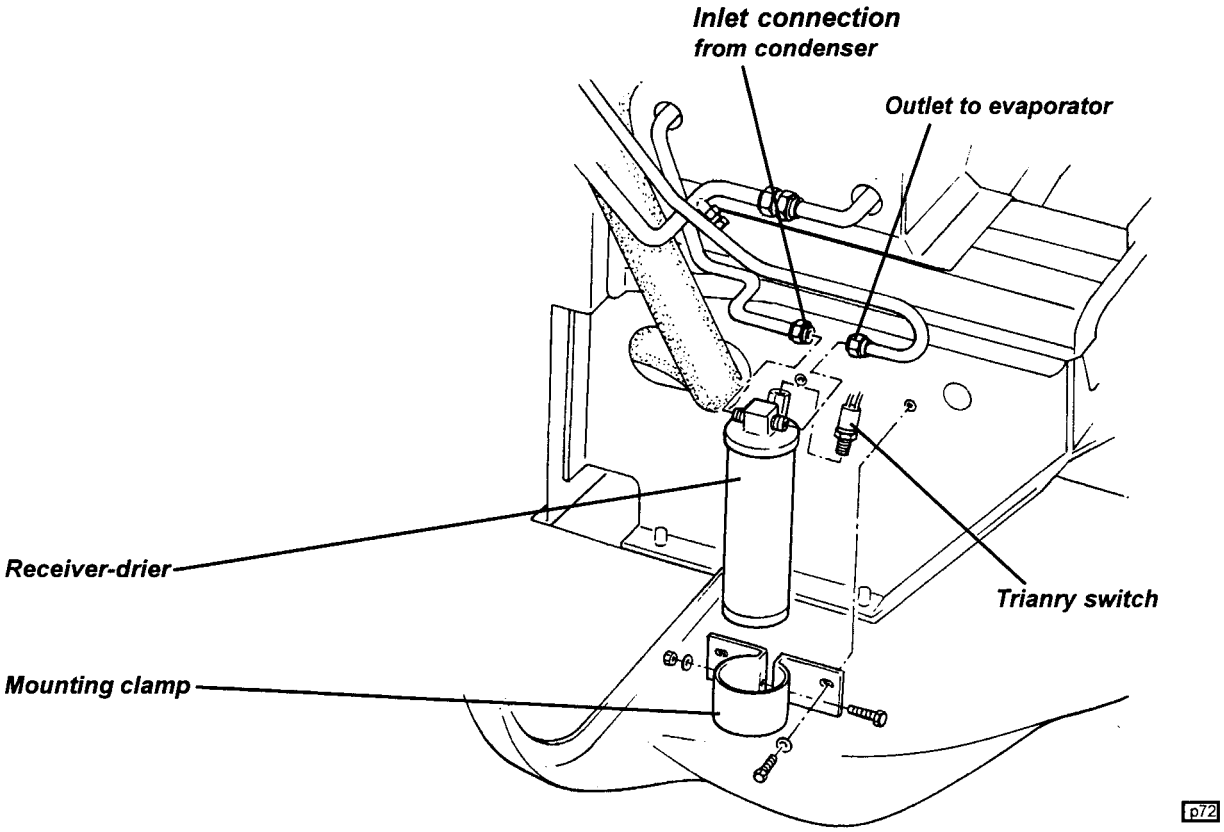

PH.12 - EXPANSION VALVE

The expansion valve is fitted onto the evaporator pipes at the front of the a.c. housing in the climate chamber, and is accessible from within the front services compartment. To replace the valve:

1. Recover the refrigerant using suitable equipment connected to the service ports at the right hand front of the engine bay.

2. Release the single M6 screw securing the clamp plate to the top of the expansion valve, and withdraw the plate and both pipes from the valve. Immediately cap the pipes and ports to prevent the ingress of dirt and moisture.

3. Release the two M5 screws securing the valve to the evaporator pipes, and withdraw the valve from the pipes. Immediately cap the pipes and ports to prevent the ingress of dirt and moisture.

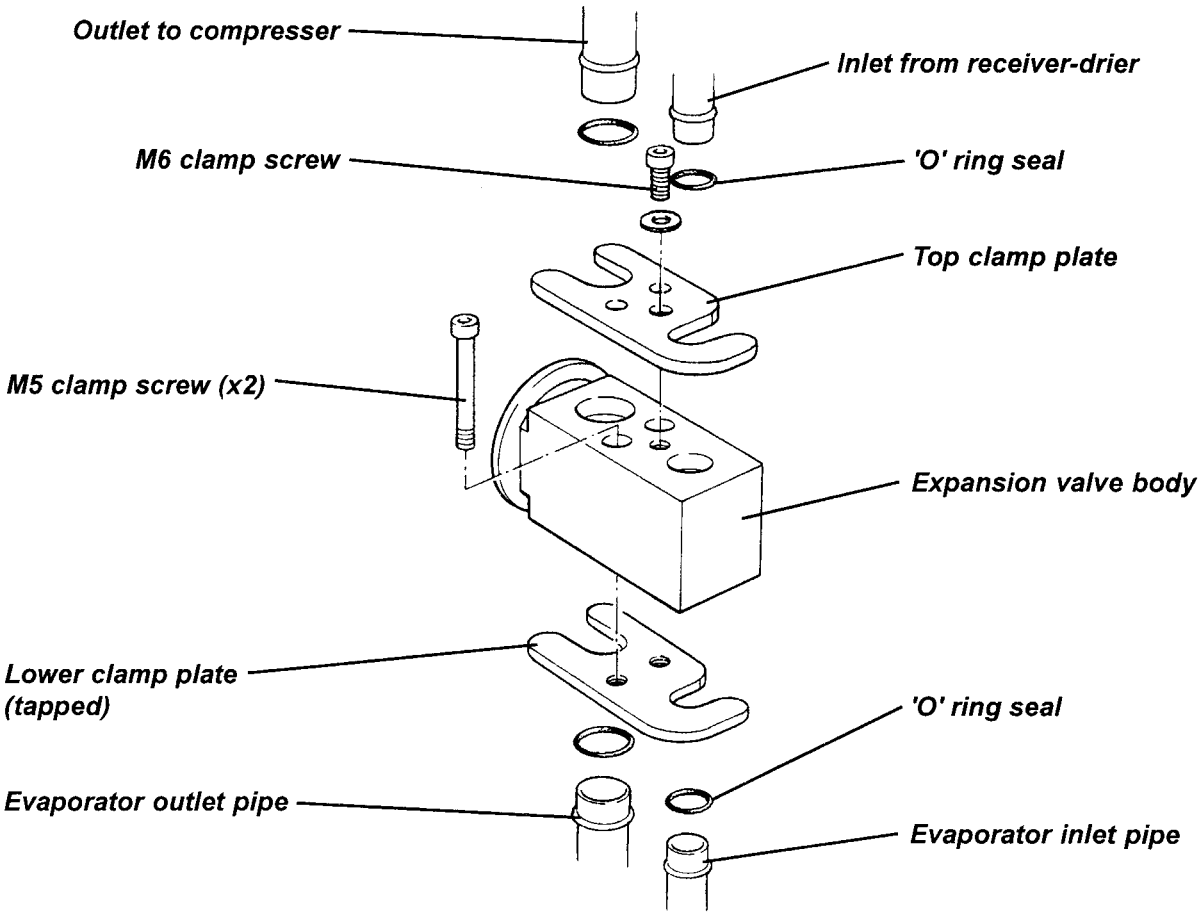

4. Before refitting, renew all the connector 'O' rings, and coat with an approved refrigerant oil.

5. Fit the threaded clamp plate around the evaporator pipes, and secure the expansion valve onto the pipes with the two M5 screws tightened to 5 - 6 Nm.

6. Use the second clamp plate to secure the two pipes to the expansion valve, tightening the single M6 screw to 7 - 9 Nm.
7. Recharge the system with 0.88 kg of R134a.

PH.13 - EVAPORATOR UNIT

The a.c. evaporator is mounted in a housing which includes the fresh air/recirc. flap, flap actuator, and a.c. thermostatic switch. The unit sits on foam pads in the passenger side of the chassis climate chamber, sealed to the fresh air and recirc. ports with foam strip. No direct fixings are used to secure the unit, which is retained by the clamping action of the battery tray mounted above it.

To Remove Evaporator Unit

1. Remove the front clamshell.

2. Remove the radiator duct outlet fence.

3. Disconnect and remove the battery. Remove the battery tray from the chassis.

4. Recover the refrigerant. Remove the a.c. pipe between expansion valve and receiver-drier, and between expansion valve and sill connector block.

5. Disconnect the harness connector to the thermostatic switch, and the vacuum pipe to the intake flap actuator.

6. Ease the evaporator unit out of the chassis.

7. Before refitting the unit in reverse order to the above, first check that the battery earth cable is correctly secured to the chassis earth point at the left hand side of the climate chamber, and on LHD cars, is correctly routed across the chamber floor to the passenger side front corner. Also check that the battery breather pipe is routed through the aperture at the bottom centre rear of the chamber. Feed the evaporator drain hose through the aperture when installing the evaporator unit.

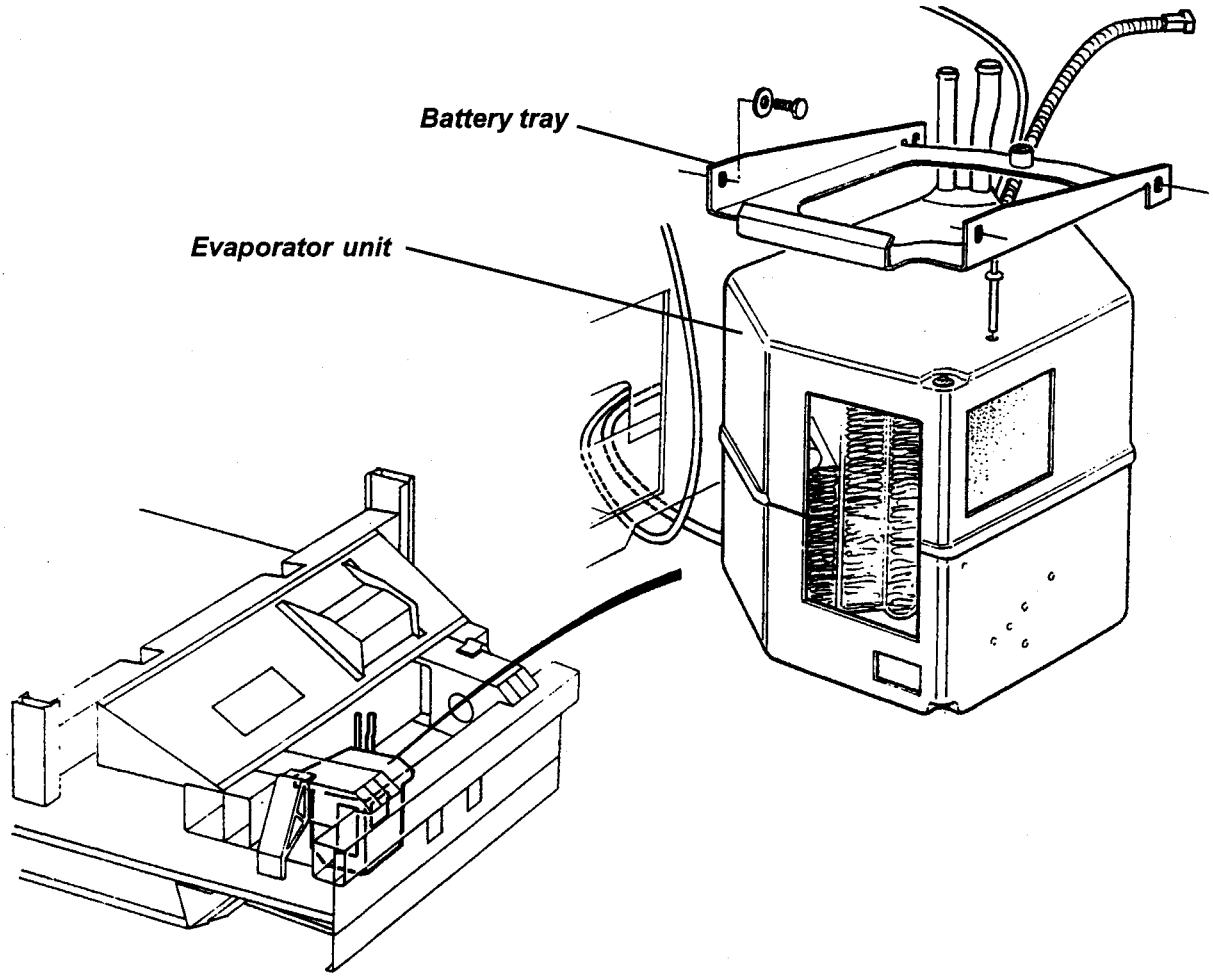

PH.14 - HEATER/BLOWER FAN ASSEMBLY

The heater/blower fan assembly comprises the heater matrix, air blend flap and blower fan and motor, contained within a rivetted plastic housing, fitted in the driver's side of the chassis climate chamber. A pair of resistors used in the fan speed switch circuit are mounted on an aluminium heat sink bracket and secured to the chassis at the drivers side front corner of the climate chamber. To remove the heater assembly, the evaporator assembly must first be removed.

1. Remove the evaporator assembly (sub-section PH.13).

2. Take suitable precautions to protect paintwork from coolant splashes, before releasing the two heater hoses from the matrix and plugging both hoses to minimise coolant loss.

3. Remove the trunking between the fan scroll and distribution plenum.

4. Disconnect the blender flap control cable from the flap lever and abutment, and unplug the fan harness connector.

5. Release the single fixing securing a bracket on the top rear of the unit to the chassis, and withdraw the unit from the chassis climate chamber.

6. Before refitting the unit in reverse order to the above, first check that the battery earth cable is correctly secured to the chassis earth point at the left hand side of the climate chamber, and on LHD cars, is correctly routed across the chamber floor to the passenger side front corner. Also check that the battery breather pipe is routed through the aperture at the bottom centre rear of the chamber.

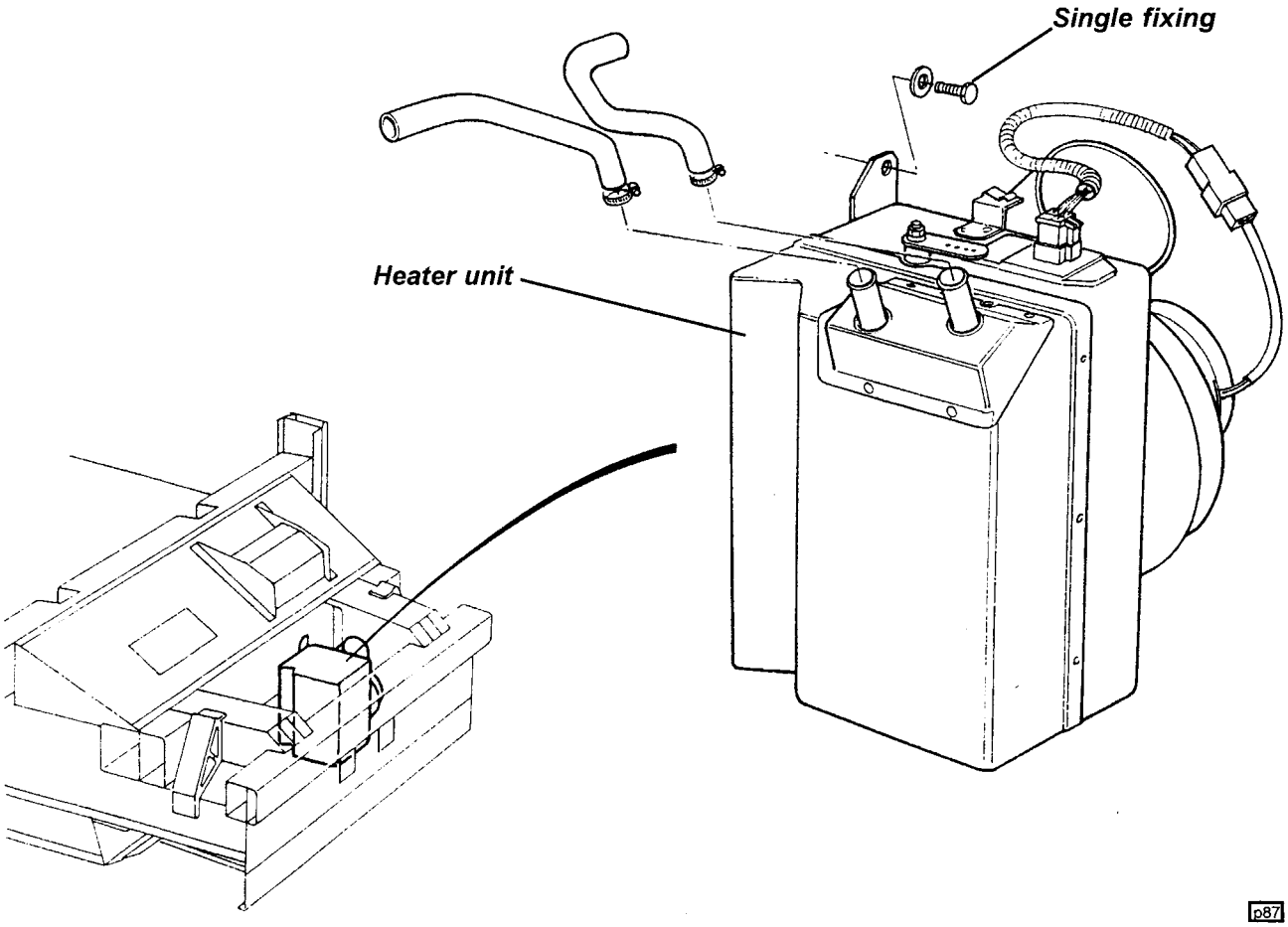

p87

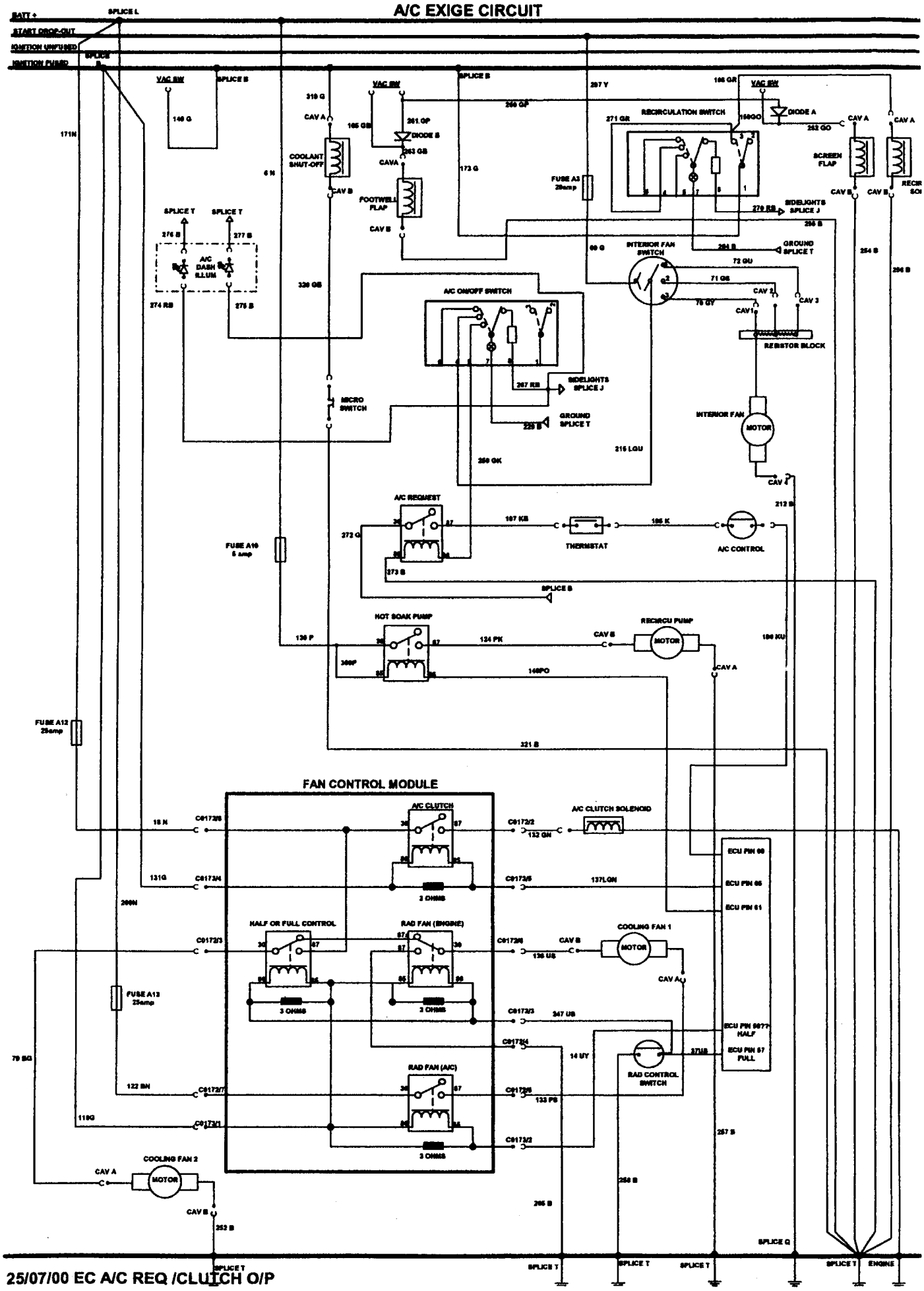
A/C EXIGE CIRCUIT
BATT +
START DROP-OUT
IGNITION UNFUSED
IGNITION FUSED
SPLICE L
SPLICE B
VAC SW
COOLANT SHUT-OFF
FOOTWELL FLAP
DIODE B
DIODE A
RECIRCULATION SWITCH
SCREEN FLAP
FUSE A3 20amp
SIDELIGHTS SPLICE J
GROUND SPLICE T
INTERIOR FAN SWITCH
A/C DASH ILLUM
A/C ON/OFF SWITCH
REBISTOR BLOCK
MICRO SWITCH
INTERIOR FAN
MOTOR
A/C REQUEST
THERMSTAT
A/C CONTROL
FUSE A10 5 amp
HOT SOAK PUMP
RECIRCU PUMP
FUSE A12 25amp
FAN CONTROL MODULE
A/C CLUTCH
A/C CLUTCH SOLENOID
HALF OR FULL CONTROL
RAD FAN (ENGINE)
COOLING FAN 1
FUSE A13 25amp
RAD FAN (A/C)
RAD CONTROL SWITCH
COOLING FAN 2
ECU PIN 60
ECU PIN 65
ECU PIN 61
ECU PIN 56/77 HALF
ECU PIN 57 FULL
3 OHMS
SPLICE T
SPLICE Q
ENGINE

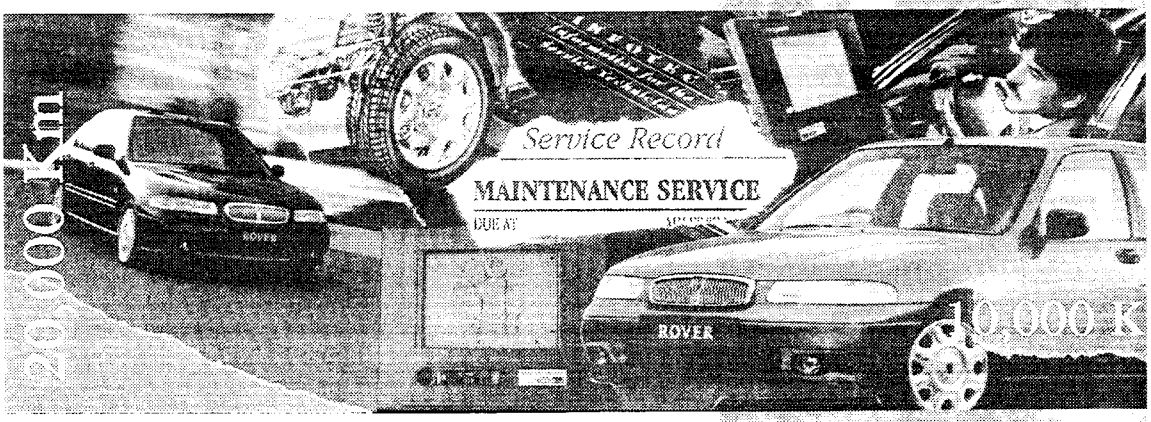

PG1 Manual
Gearbox
Overhaul Manual

PG1 Handgeschakelde versnellingsbak revisiehandboek

PG1 Boîte de vitesses manuelle Manuel de révision

PG1 Schaltgetriebe Überholungsanleitung

PG1 Cambio meccanico Manuale di revisione

PG1 Caja de cambios manual Manual de revisión

PG1 Caixa de velocidades manual Manual de revisão

ROVER

RCL 0124

'K' SERIES ENGINE

OVERHAUL MANUAL

This overhaul manual is applicable to 'K' Series engines fitted with either VVC or non VVC cylinder heads and 'damp' cylinder liners.

This engine is fitted to the following models:
MGF,
Rover 114 and 214/414
New Rover 214, 216, 218 and BRM
New Rover 414 and 416 Coupe,
Cabriolet, Tourer and Sports Models
Rover 25, Rover 45 and Rover 75

Publication Part No. RCL 0057ENG (5th Edition)
Published by Rover Technical Communication
© 2000 Rover Group Limited

CONTENTS

Page

INTRODUCTION

INTRODUCTION 1
REPAIRS AND REPLACEMENTS 1
SPECIFICATION 2
ENGINE NUMBER LOCATION 2
ENGINE SERIAL NUMBER PREFIXES 2
COMMENCING ENGINE NUMBERS 2
K16 Non VVC engines fitted with automatic timing belt tensioner 2
K16 Non VVC engines fitted with modified camshafts and cylinder heads 3
Cylinder heads fitted with triple angle valve seats 3
Modified - Type B crankshafts 3

INTRODUCTION

How to use this manual

To assist in the use of this manual the section title is given at the top and the relevant sub-section is given at the bottom each page.

To help readers find the information they need, the first page of each section is marked with a black tab. In addition the symbol at the top of each RH page identifies each section or group of sections.

Each section starts with a contents page, listing the information contained within. Some sections are divided into sub- sections such as Description and Operation, Adjustments, Repairs and Data, Torque and Tools. To assist filing of revised information each of the sub-sections is numbered from page 1.

Each Adjustment and Repair procedure is fully illustrated showing a number against each text item. Service tools are shown in use where usage is not obvious. Each illustration appears before the text which refers to it. Adjustment and Repair operations also include relevant data, torque figures and useful assembly details.

WARNINGS, CAUTIONS and Notes have the following meanings:

WARNING: Procedures which must be followed precisely to avoid the possibility of injury.

CAUTION: Calls attention to procedures which must be followed to avoid damage to components.

NOTE: Gives helpful information.

References

References to the LH or RH side given in this manual are made when viewing the vehicle from the rear. With the engine and gearbox assembly removed, the crankshaft pulley end of the engine is referred to as the front.

Operations covered in this manual do not include reference to testing the vehicle after repair. It is essential that work is inspected and tested after completion and if necessary a road test of the vehicle is carried out particularly where safety related items are concerned.

Dimensions

The dimensions quoted are to design engineering specification with Service limits where applicable.

During the period of running-in from new, certain adjustments may vary from the specification figures given in this manual. These will be reset by the Dealer at the First Service, and thereafter should be maintained at the figures specified in this manual.

REPAIRS AND REPLACEMENTS

When replacement parts are required it is essential that only Rover recommended parts are used.

Attention is particularly drawn to the following points concerning repairs and the fitting of replacement parts and accessories.

Safety features and corrosion prevention treatments embodied in the car may be impaired if other than Rover recommended parts are fitted. In certain territories, legislation prohibits the fitting of parts not to the manufacturer's specification. Torque wrench setting figures given in this Manual must be used. Locking devices, where specified, must be fitted. If the efficiency of a locking device is impaired during removal it **must be renewed.**

Owners purchasing accessories while travelling abroad should ensure that the accessory and its fitted location on the car conform to legal requirements.

The Terms of the vehicle Warranty may be invalidated by the fitting of other than Rover recommended parts.

All Rover recommended parts have the full backing of the vehicle Warranty.

Rover Dealers are obliged to supply only Rover recommended parts.

INTRODUCTION

SPECIFICATION

Rover are constantly seeking to improve the specification, design and production of their vehicles and alterations take place accordingly. While every effort has been made to ensure the accuracy of this Manual, it should not be regarded as an infallible guide to current specifications of any particular vehicle.

This Manual does not constitute an offer for sale of any particular vehicle. Rover Dealers are not agents of Rover and have no authority to bind the manufacturer by any expressed or implied undertaking or representation.

ENGINE NUMBER LOCATION

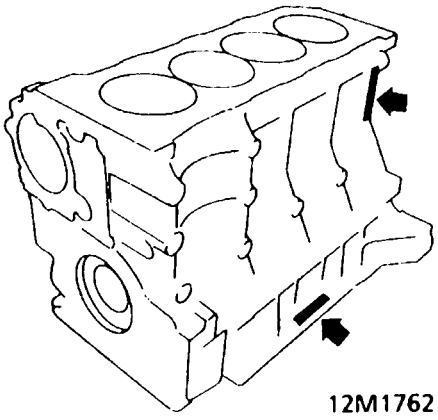

The engine number will be found stamped either on the LH side of the bearing ladder or cast on the rear LH side of the cylinder block.

ENGINE SERIAL NUMBER PREFIXES

Engines covered by this overhaul manual have the following prefixes in the engine serial number:
H63, H64, H67, H71, H72, H75, H76, H77, H78
J31, J32, J78, J79, J89, J90
K38, K39, K40, K41, K43, K44, K45, K51, K53, K61, K63, K67, K68, K74, K76, K77, K78, K79, K80, K88, K89
L06, L07, L08, L09, L10, L24,L25, L28, L30, L31, L32, L33, L34, L35, L36, L37, L44, L45, L46, L47, L48, L49, L50, L51, L64, L67, L68, L69, L82, L97, L98, L99 K79, K80, K88, K89
M01, M21, M22, M23, M26, M27, M28, M29, M30, M31, M36, M37. M38, M39, M41, M42, M47, M48, M49, M50, M51, M52, M53, M54, M55, M56, M62, M64, M65, M67, M68, M70, M71, M72, M73, M75, M76, M79, M80, M81, M82, M83, M84, M85, M86, M87, M88, M89, M90, M91, M92, M93, M94, M95, M96, M97, M98, M99
N01

COMMENCING ENGINE NUMBERS

NOTE: The following modifications have been introduced at the following engine numbers. Engines fitted to Rover 25, 45 and 75 models incorporate these modifications from commencement of production.

K16 Non VVC engines fitted with automatic timing belt tensioner

14K4FK76 646038, 14K4FK76 885300
14K4FK77 655218, 14K4FK77 885300

14K4FL30 153524, 14K4FL30 885300
14K4FL31 154156, 14K4FL31 885300

16K4FK79 654924, 16K4FK79 885300
16K4FK80 655078, 16K4FK80 885300

16K4FL32 153217, 16K4FL33 152709
16K4FL34 149204, 16K4FL35 145785

18K4FJ31 153993, 18K4FJ32 147263
18K4FJ78 151555, 18K4FJ79 153785
18K4FJ89 146503, 18K4FJ90 141815
18K4FL66 148135, 18K4FL67 665464
18K4KL36 118709, 18K4KL37 102149

K16 Non VVC engines fitted with modified camshafts and cylinder heads

14K4FK76 872191, 14K4FK77 872382
14K4FL30 114520, 14K4FL30 872041
14K4FL31 104073

16K4FK79 872751, 16K4FK80 872285
16K4FL32 114135, 16K4FL33 112837
16K4FL34 110965, 16K4FL35 110541

18K4FJ31 112397, 18K4FJ32 111281
18K4FJ78 115630, 18K4FJ79 112575
18K4FL66 674985, 18K4FL67 110704
18K4KJ89 110206, 18K4KJ90 683004
18K4KL36 703592, 18K4KL37 703768

Cylinder heads fitted with triple angle valve seats

14K4FK76 853697, 14K4FK77 853547
14K4FL30 684272, 14K4FL31 682772

16K4FK79 853606, 16K4FK80 853676
16K4FL32 6847[illegible]5, 16K4FL33 684141
16K4FL34 6748[illegible]3, 16K4FL35 675041

18K4FJ31 685002, 18K4FJ32 678009
18K4FJ78 679210, 18K4FJ79 682294
18K4FL66 658261, 18K4FL67 615758
18K4KL36 667388, 18K4KL37 657611
18K4KJ89 673981, 18K4KJ90 637368

Modified - type B crankshafts

11K2FK42 602582

14K2FH67 601998
14K2FK43 604022, 14K2FK44 585572
14K2FL64 589869
14K4FH71 589479, 14K4FH72 603771
14K4FK76 580134, 14K4FK77 602717

16K4FH75 597254, 16K4FH76 597902
16K4FK79 581514, 16K4FK80 583009
16K4FK88 605066, 16K4FK89 600785

18K4FJ31 599800, 18K4FJ32 577734
18K4FJ79 581514, 18K4FJ89 597466
18K4FK61 547750, 18K4FK67 526547
18K4FK68 323456, 18K4FL50 527882
18F4FL51 551737, 18K4FL82 589737
18K4KH77 585941, 18K4KH78 588402
18K4KJ90 568275

This page is intentionally left blank

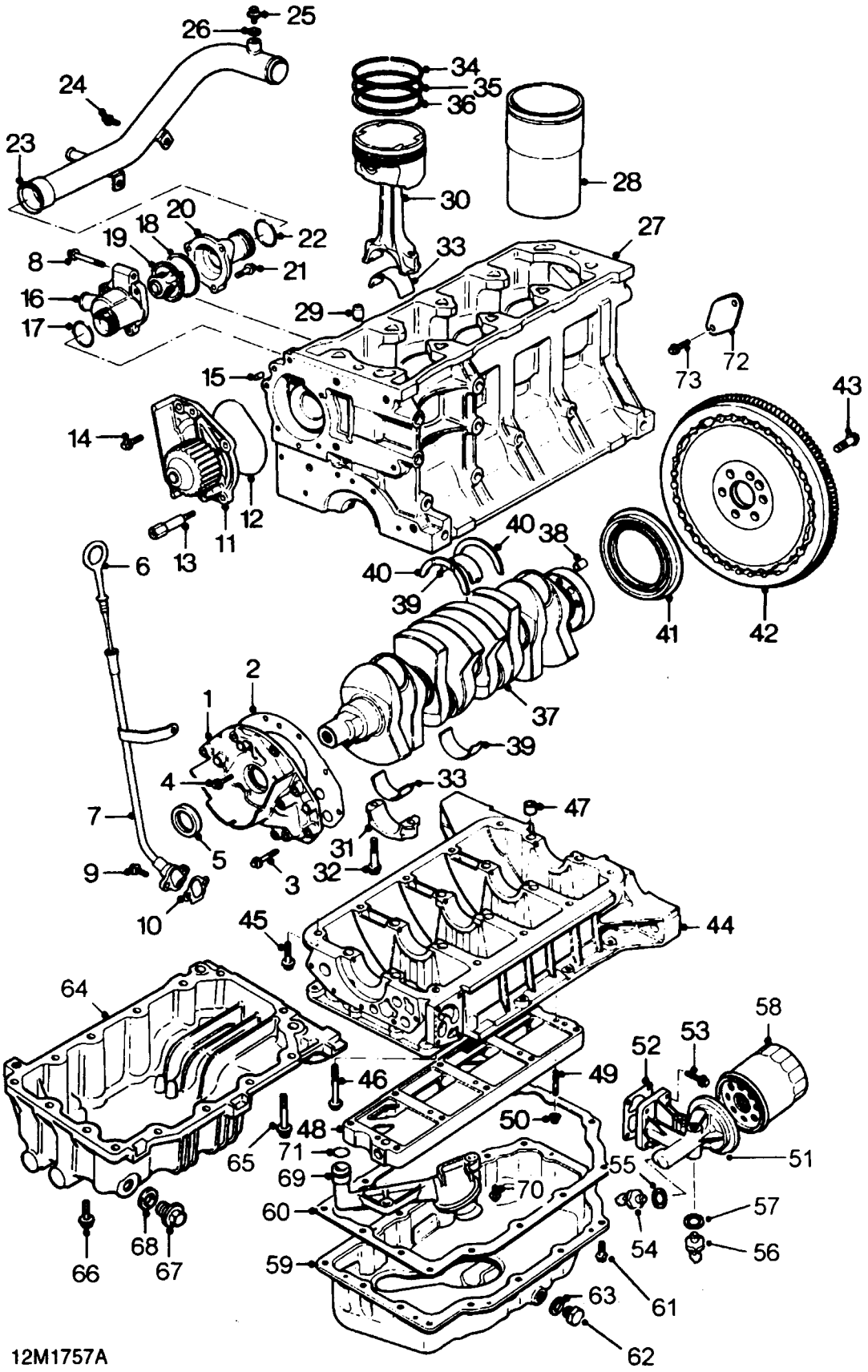
25
26
24
23
34
35
36
28
30
20
18
19
22
8
21
33
27
16
17
29
73
72
15
43
14
12
11
13
40
38
6
40
39
41
42
2
1
37
39
4
33
7
47
5
31
9
3
32
10
45
44
64
58
53
52
46
49
48
50
65
71
51
69
55
70
60
57
68
54
56
66
67
59
63
61
62
12M1757A

This page is intentionally left blank

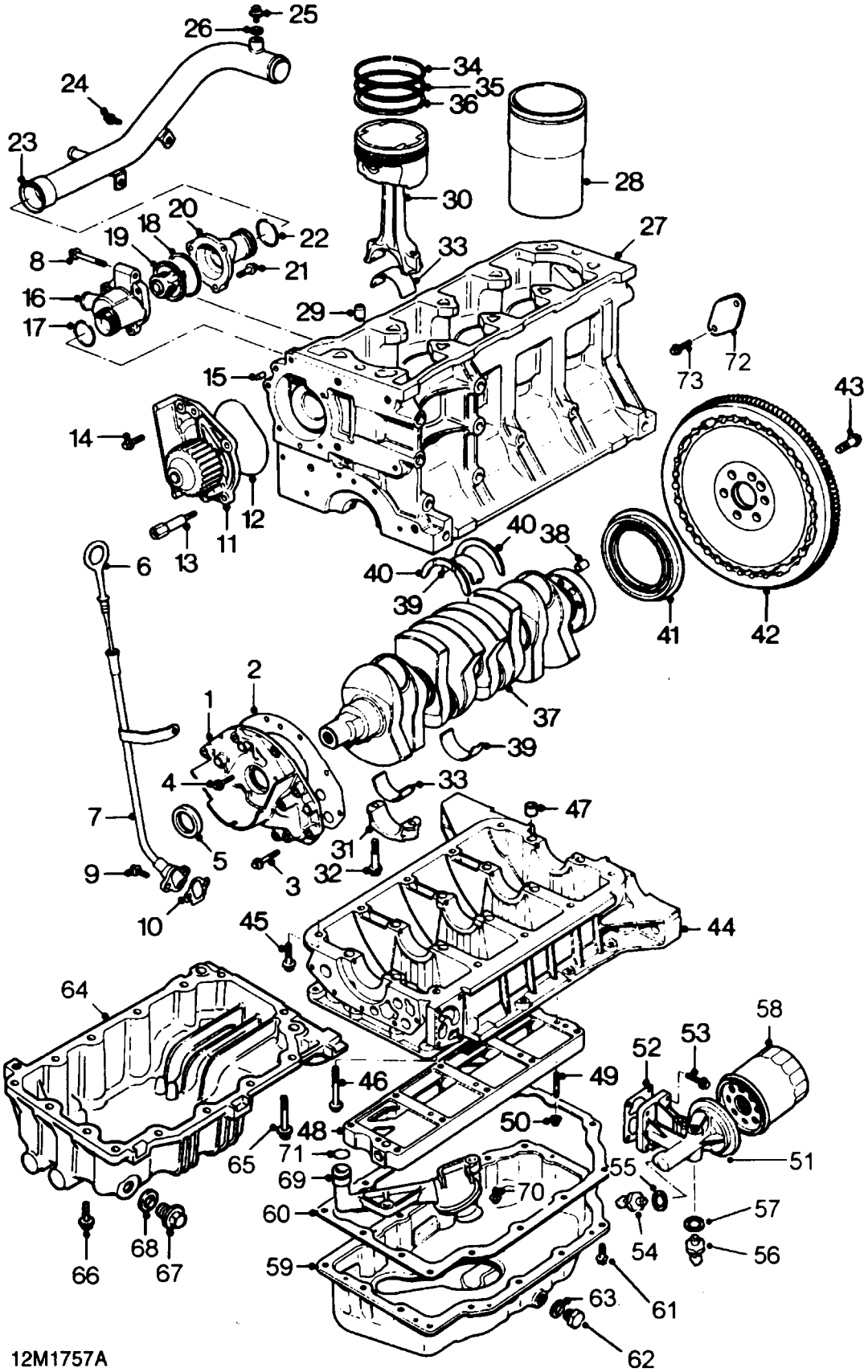
25
26
24
23
34
35
36
28
30
20
18
19
22
8
21
16
17
33
27
29
15
73
72
43
14
12
11
13
40
38
6
40
39
41
42
2
1
37
39
4
33
7
47
5
31
9
3
32
10
45
44
64
58
53
52
46
49
48
50
65
71
51
69
55
70
57
60
68
54
56
66
67
59
63
61
62
12M1757A

CYLINDER BLOCK COMPONENTS

1. Oil pump assembly
2. Gasket - oil pump
3. Screw - M6 x 30 - oil pump
4. Screw M6 x 20 - oil pump
5. Crankshaft front oil seal
6. Dipstick
7. Dipstick tube
8. Screw - dipstick tube and thermostat housing
9. Screw - dipstick tube
10. Gasket
11. Coolant pump
12. 'O' ring - coolant pump
13. Pillar bolt - if fitted
14. Bolt - coolant pump
15. Locating dowel
16. Thermostat housing - plastic
17. 'O' ring
18. Seal thermostat
19. Thermostat
20. Cover - plastic
21. Screw
22. 'O' ring
23. Coolant rail
24. Screw - coolant rail
25. Vent screw - if fitted
26. Sealing washer
27. Cylinder block
28. Cylinder liner
29. Ring dowel
30. Piston and connecting rod assembly
31. Big-end bearing cap
32. Connecting rod bolt
33. Big-end bearing shells
34. Top compression ring
35. 2nd compression ring
36. Oil control ring
37. Crankshaft
38. Ring dowel
39. Main bearing shells
    Plain in block Nos.1 and 5
    Grooved in block Nos. 2, 3 and 4
    Plain in bearing ladder
40. Thrust washers
41. Crankshaft rear oil seal
42. Flywheel assembly
43. Flywheel bolt - Patchlok
44. Bearing ladder
45. Bolt - bearing ladder
46. Bolt - bearing ladder
47. Ring dowel
48. Oil rail
49. Stud - oil rail
50. Nut - oil rail
51. Oil filter adapter
52. Gasket
53. Bolt
54. Oil pressure switch
55. Sealing washer
56. Oil temperature sensor - if fitted
57. Sealing washer
58. Oil filter element
59. Pressed steel sump
60. Gasket
61. Sump bolt - M6 - Patchlok
62. Drain plug
63. Sealing washer
64. Alloy sump
65. Sump bolt - M8 x 25
66. Sump bolt - M8 x 60
67. Drain plug
68. Sealing washer
69. Oil suction pipe
70. Screw - oil suction pipe
71. 'O' ring
72. Blanking plate
73. Screw - blanking plate

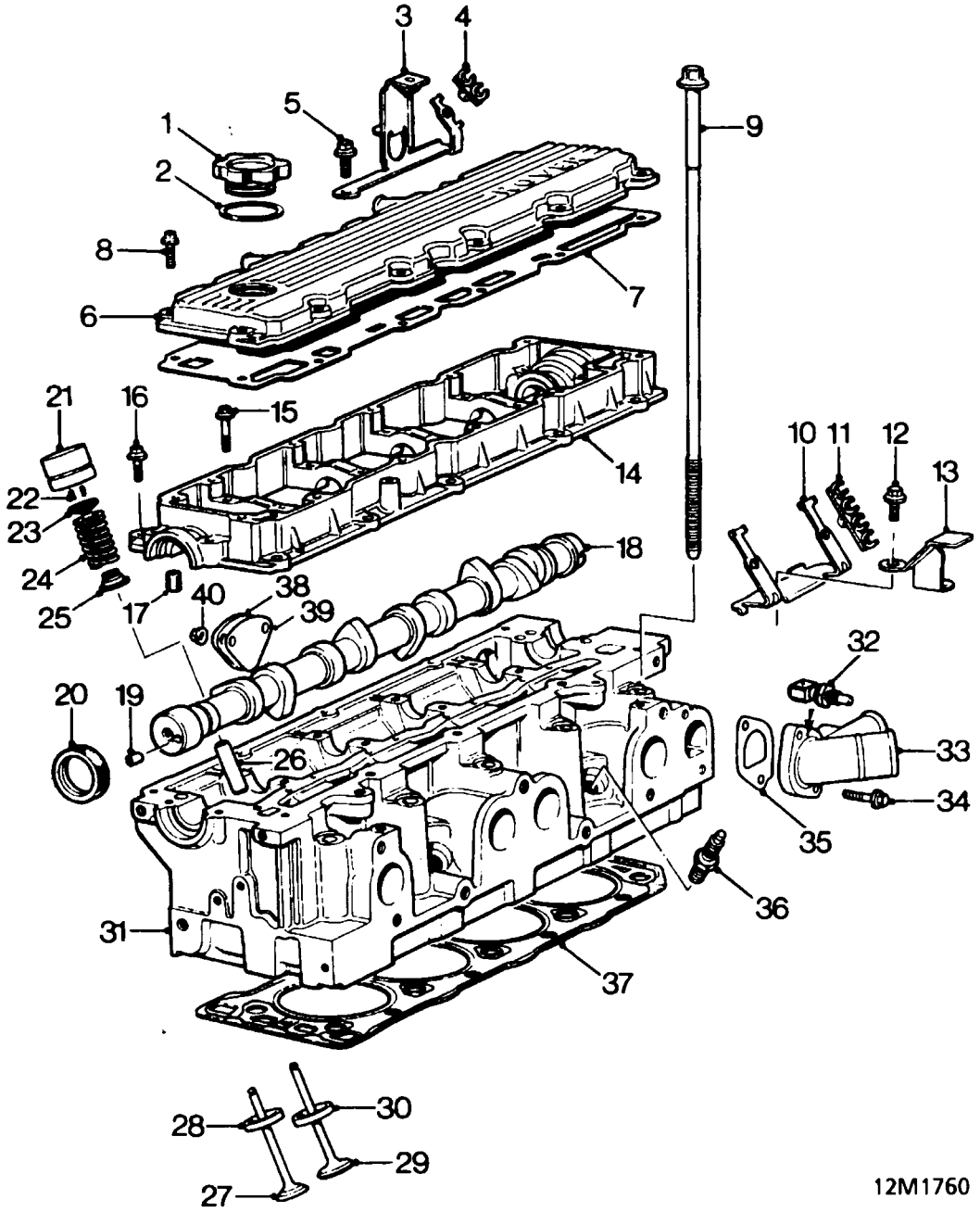
1
2
3
4
5
6
7
8
9
10
11
12
13
14
15
16
17
18
19
20
21
22
23
24
25
26
27
28
29
30
31
32
33
34
35
36
37
38
39
40
12M1760

CYLINDER HEAD COMPONENTS - K8 ENGINES

1. Engine oil filler cap
2. Filler cap seal
3. ht clip mounting bracket
4. Clip - 2 ht leads
5. Bolt, bracket
6. Camshaft cover
7. Gasket
8. Bolt - camshaft cover
9. Cylinder head bolt
10. ht clip mounting bracket
11. Clip - 4 ht leads
12. Bolt, bracket
13. Mounting bracket - duct
14. Camshaft carrier
15. Bolt - camshaft carrier - long
16. Bolt - camshaft carrier - short
17. Locating dowel - camshaft carrier
18. Camshaft
19. Drive pin - camshaft gear
20. Camshaft oil seal
21. Hydraulic tappet
22. Collets - valve
23. Valve spring cap
24. Valve spring
25. Valve stem oil seal
26. Valve guide
27. Exhaust valve
28. Valve seat insert - exhaust
29. Inlet valve
30. Valve seat insert - inlet
31. Cylinder head
32. Coolant temperature sensor
33. Coolant outlet elbow
34. Bolt - coolant outlet elbow
35. Gasket - coolant outlet elbow
36. Spark plug
37. Cylinder head gasket
38. Fuel pump blanking plate - if fitted
39. Gasket
40. Nuts - blanking plate

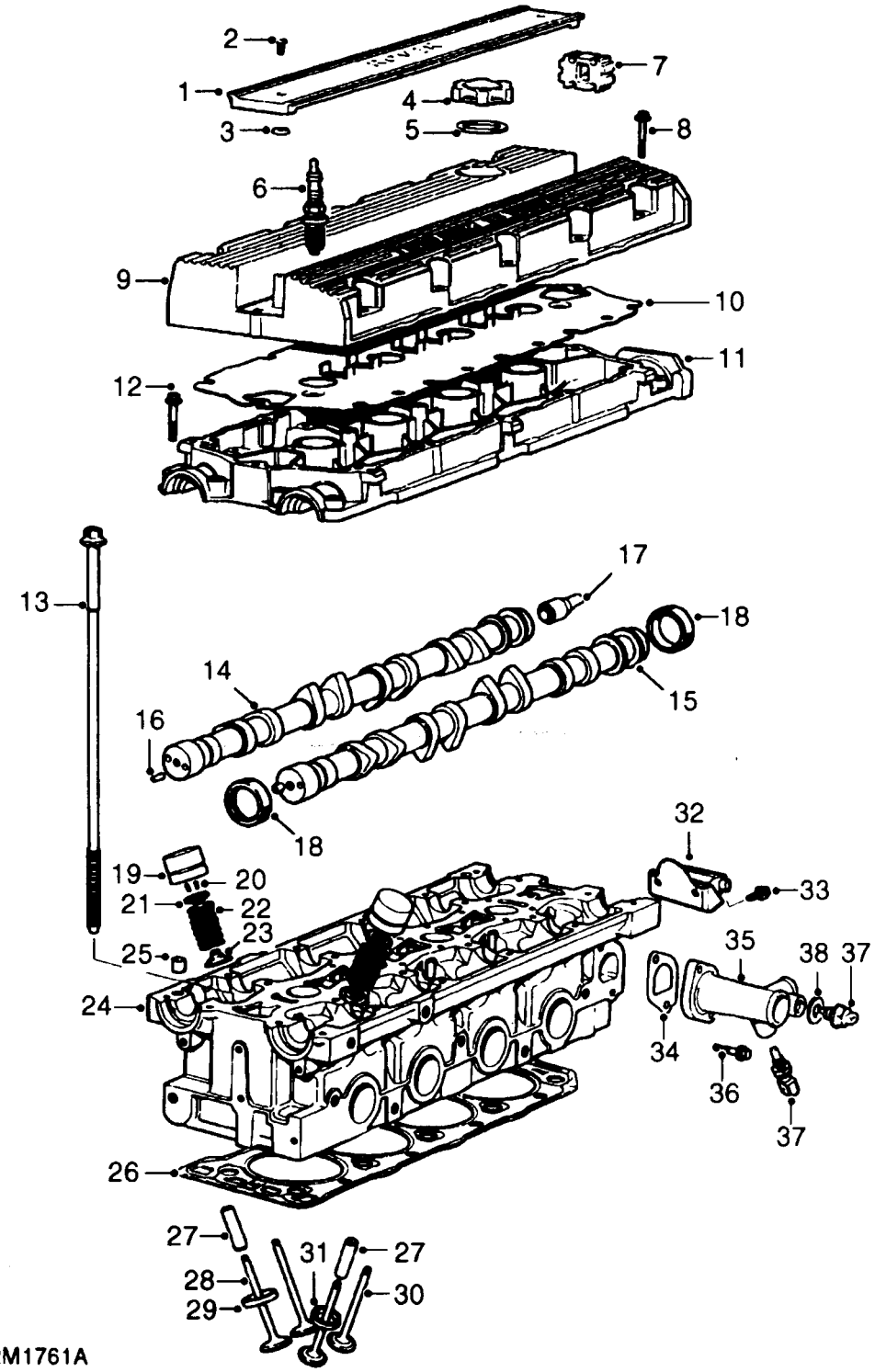
1
2
3
4
5
6
7
8
9
10
11
12
13
14
15
16
17
18
18
19
20
21
22
23
24
25
26
27
27
28
29
30
31
32
33
34
35
36
37
37
38
12M1761A

CYLINDER HEAD COMPONENTS - K16 NON VVC ENGINES FITTED WITH DISTRIBUTOR

1. Spark plug cover
2. Screw M4 - cover
3. Screw retaining washer
4. Engine oil filler cap
5. Filler cap seal
6. Spark plug
7. Clip - ht leads
8. Bolt M6 - camshaft cover
9. Camshaft cover
10. Camshaft cover gasket
11. Camshaft carrier
12. Bolt M6 - camshaft carrier
13. Cylinder head bolt
14. Camshaft - inlet
15. Camshaft - exhaust
16. Drive pin - camshaft gear
17. Drive spindle - rotor arm
18. Camshaft oil seal
19. Hydraulic tappet
20. Collets - cap
21. Valve spring cap
22. Valve spring
23. Valve stem oil seal
24. Cylinder head
25. Ring dowel - cylinder head to camshaft carrier
26. Cylinder head gasket
27. Valve guide
28. Inlet valve
29. Valve seat insert - inlet
30. Exhaust valve
31. Valve seat insert - exhaust
32. Blanking plate
33. Screw M6
34. Gasket - coolant outlet elbow
35. Coolant outlet elbow
36. Screw M6 - coolant outlet elbow
37. Coolant temperature sensors
38. Sealing washer

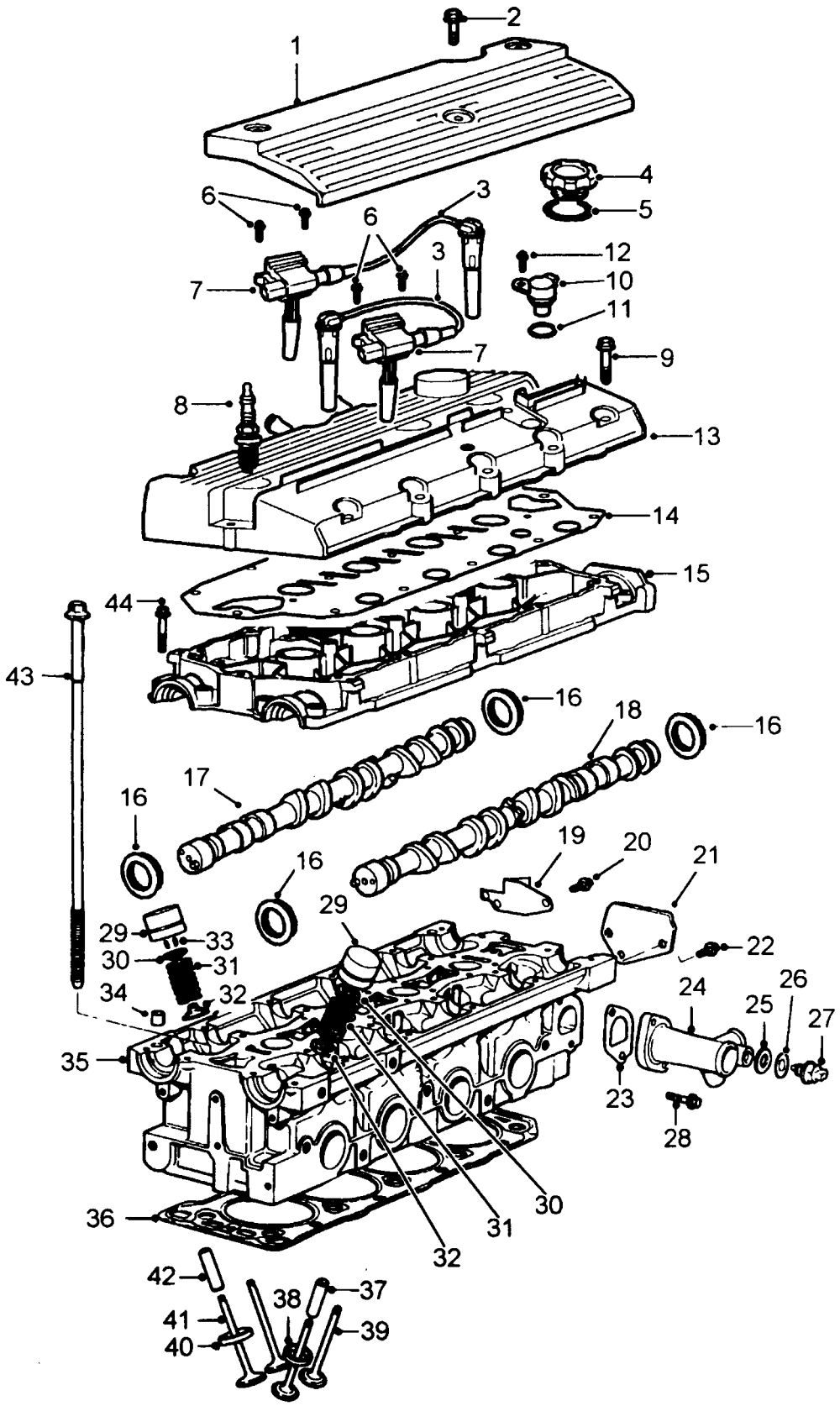
1
2
3
4
5
6
7
8
9
10
11
12
13
14
15
16
17
18
19
20
21
22
23
24
25
26
27
28
29
30
31
32
33
34
35
36
37
38
39
40
41
42
43
44

M124971

CYLINDER HEAD COMPONENTS - K16 NON VVC ENGINES FITTED WITH PLUG TOP COIL IGNITION SYSTEM

1. Spark plug cover
2. Screw - spark plug cover
3. ht lead and plug tube
4. Oil filler cap
5. Seal - oil filler cap
6. Screws - coils to camshaft cover
7. Coil
8. Spark plug
9. Bolt - camshaft cover
10. Camshaft sensor
11. 'O' ring
12. Bolt - camshaft sensor
13. Camshaft cover
14. Gasket - camshaft cover
15. Camshaft carrier
16. Camshaft oil seal
17. Inlet camshaft
18. Exhaust camshaft
19. Bracket - multiplug
20. Bolt - multiplug bracket
21. Blanking plate - 2 off
22. Bolt - blanking plate
23. Gasket - coolant outlet elbow
24. Coolant outlet elbow
25. Sealing washer
26. Gasket
27. Coolant temperature sensor
28. Bolt - coolant outlet elbow
29. Hydraulic tappet
30. Valve spring cap
31. Valve spring
32. Valve stem oil seal
33. Collets
34. Locating dowel
35. Cylinder head
36. Gasket - cylinder head
37. Exhaust valve guide
38. Valve seat insert - exhaust
39. Exhaust valve
40. Valve seat insert - inlet
41. Inlet valve
42. Inlet valve guide
43. Bolt - cylinder head
44. Bolt - camshaft carrier

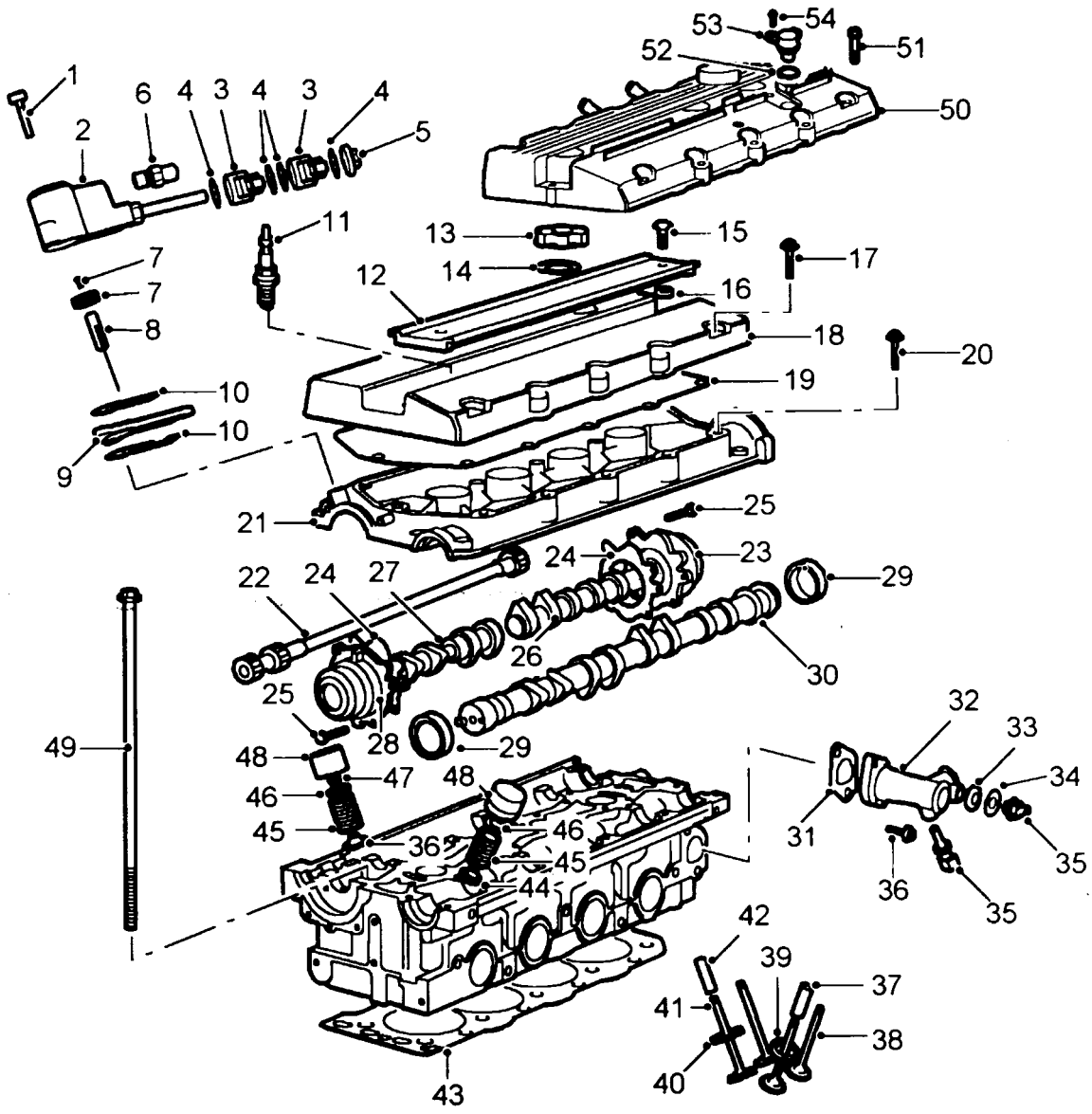
1
2
6
4
3
4
3
4
5
53
54
52
51
50
11
13
15
7
7
8
12
14
16
17
18
20
19
10
10
9
21
25
24
23
22
24
27
29
26
30
25
28
29
49
48
47
48
46
45
36
46
45
44
32
33
34
31
36
35
35
42
39
37
41
38
40
43

M12 7257

CYLINDER HEAD COMPONENTS - K16 VVC ENGINES

1. Bolts - hydraulic control unit
2. Hydraulic control unit body and spool valve
3. Solenoids
4. 'O' rings
5. Spool valve nut
6. Oil temperature transmitter
7. Piston screw, piston and seal assembly
8. Rack
9. Seal plate
10. Labyrinth seals
11. Spark plug
12. Spark plug cover
13. Oil filler cap
14. Filler cap seal
15. Screw - spark plug cover
16. Washer
17. Bolt - camshaft cover *
18. Camshaft cover *
19. Gasket - camshaft cover
20. Bolt - camshaft carrier
21. Camshaft carrier
22. Control shaft
23. Rear VVC housing and mechanism
24. Gasket - VVC housing
25. Bolt - VVC housing
26. Rear inlet camshaft
27. Front inlet camshaft
28. Front VVC housing and mechanism
29. Exhaust camshaft oil seals
30. Exhaust camshaft
31. Gasket - coolant outlet elbow
32. Coolant outlet elbow
33. Sealing washer
34. Gasket
35. Coolant temperature sensors
36. Bolt - coolant outlet elbow
37. Exhaust valve guide
38. Exhaust valve
39. Valve seat insert - exhaust
40. Valve seat insert - inlet
41. Inlet valve
42. Inlet valve guide
43. Cylinder head gasket
44. Valve stem oil seal
45. Valve spring
46. Valve spring cap
47. Collets
48. Hydraulic tappet
49. Bolt - cylinder head
50. Camshaft cover **
51. Bolt - camshaft cover **
52. 'O' ring - camshaft sensor **
53. Camshaft sensor **
54. Bolt - camshaft sensor **

* Early engines
** Later engines

TIMING BELT COMPONENTS - K8 ENGINES

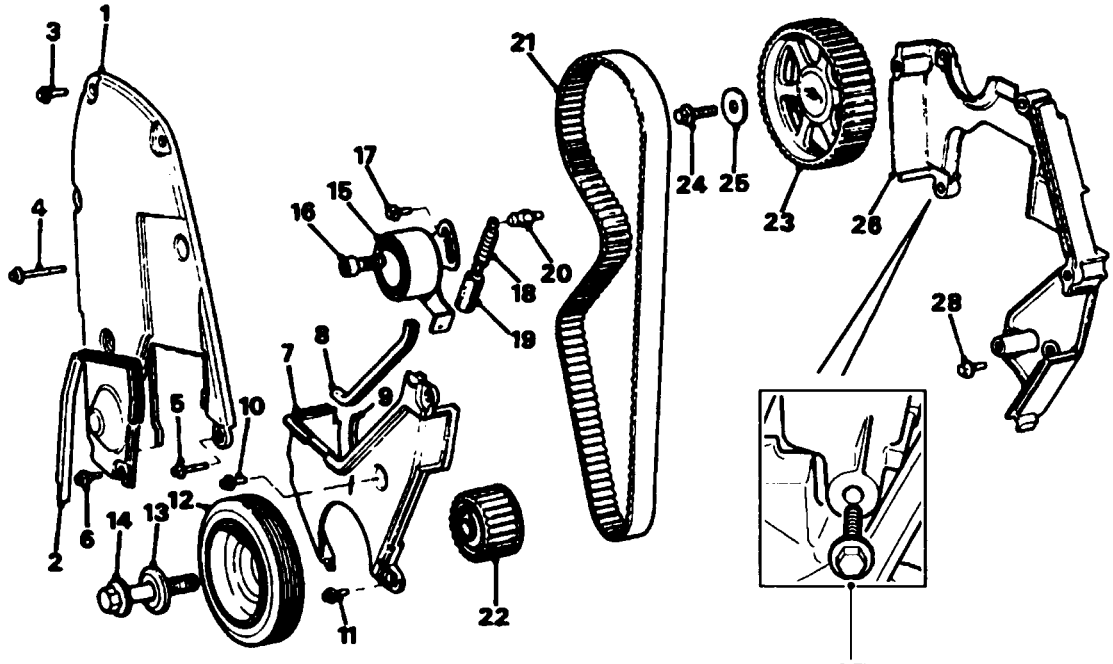

M124934

1. Upper front cover - timing belt
2. Seal - upper cover
3. Screw M6 x 16 - upper cover
4. Bolt M6 x 40 - upper cover
5. Bolt M6 x 20 - upper cover
6. Flange shoulder screw - upper cover
7. Lower cover - timing belt
8. Seal - lower cover to mounting
9. Seal - lower cover to cylinder block
10. Screw - lower cover
11. Screw M6 x 16 - lower cover
12. Crankshaft pulley
13. Special washer - pulley bolt
14. Crankshaft pulley bolt
15. Tensioner pulley and backplate
16. Allen screw - tensioner to cylinder head
17. Flange head screw - tensioner backplate
18. Tensioner spring
19. Sleeve - spring
20. Pillar bolt
21. Camshaft timing belt
22. Crankshaft timing gear
23. Camshaft timing gear
24. Camshaft gear bolt
25. Plain washer
26. Upper rear cover - timing belt
27. Screw - rear cover to coolant pump
28. Screw - rear cover

TIMING BELT COMPONENTS - K16 NON VVC ENGINES FITTED WITH MANUAL TIMING BELT TENSIONER

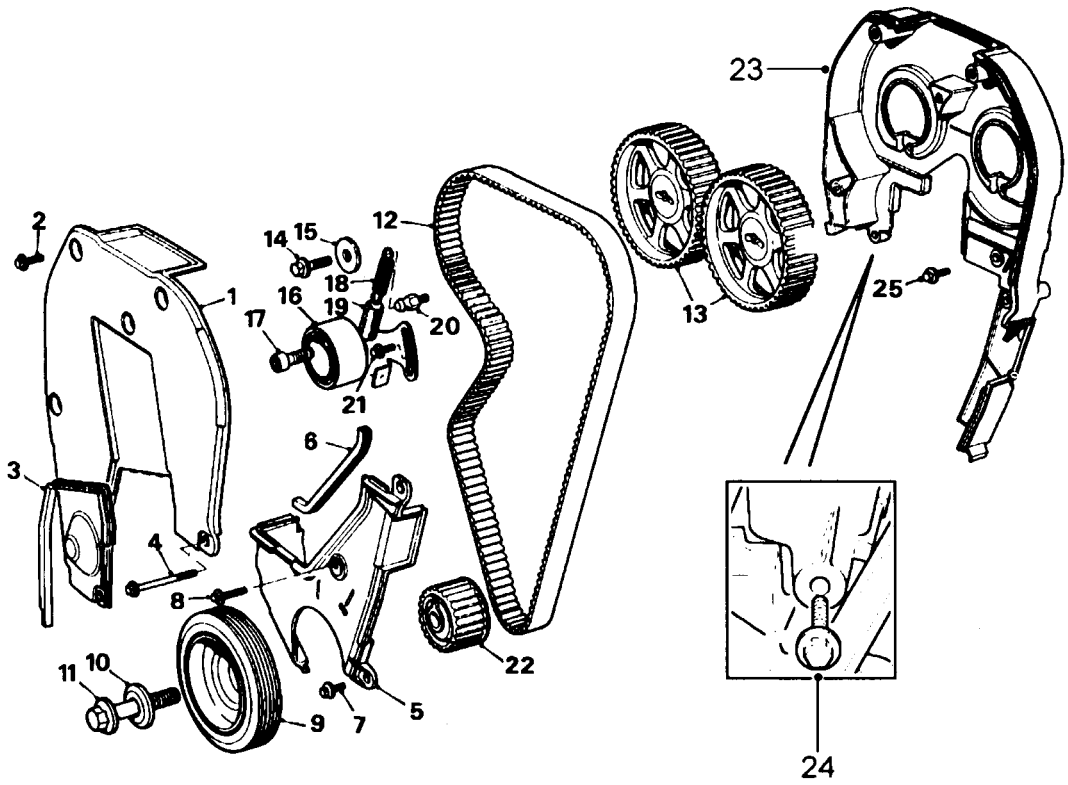

M124933

1. Upper front cover - timing belt
2. Screw M6 - upper cover
3. Seal - upper cover
4. Bolt M6 x 90 - upper and lower cover
5. Lower cover - timing belt
6. Seal - lower cover
7. Screw M6 - lower cover
8. Screw M6 x 16 - lower cover
9. Crankshaft pulley
10. Special washer - pulley bolt
11. Crankshaft pulley bolt
12. Camshaft timing belt
13. Camshaft timing gears
14. Camshaft gear bolt
15. Plain washer
16. Tensioner pulley and backplate
17. Allen screw - pulley
18. Tensioner spring
19. Sleeve - spring
20. Pillar bolt
21. Flange head screw - tensioner backplate
22. Crankshaft timing gear
23. Rear cover - timing belt
24. Screw - rear cover to coolant pump
25. Screw - rear cover

TIMING BELT COMPONENTS - K16 NON VVC ENGINES FITTED WITH AUTOMATIC TIMING BELT TENSIONER

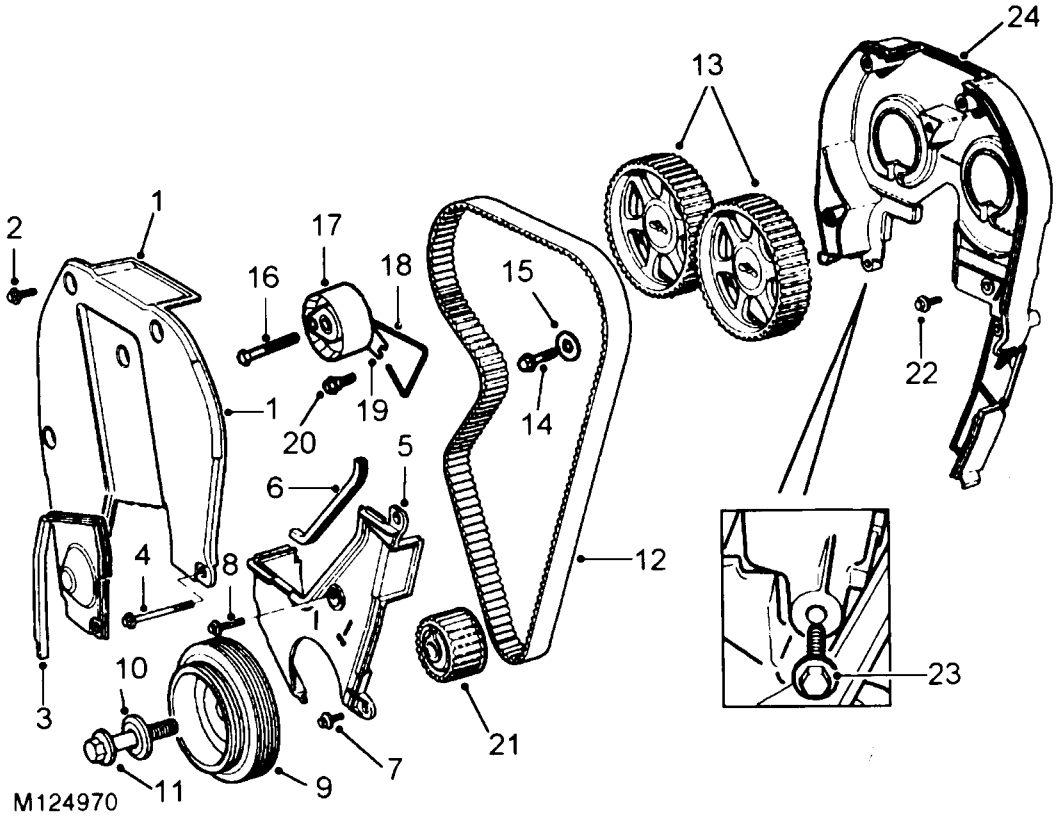

1. Upper front cover - timing belt
2. Screw M6 - upper cover
3. Seal - upper cover
4. Bolt M6 x 90 - upper and lower covers
5. Lower cover - timing belt
6. Seal - lower cover
7. Screw M6 - lower cover
8. Screw M6 x 16 - lower cover
9. Crankshaft pulley
10. Special washer - pulley bolt
11. Crankshaft pulley bolt
12. Camshaft timing belt
13. Camshaft timing gears
14. Camshaft gear bolt
15. Plain washer
16. Bolt - tensioner *
17. Tensioner
18. Index wire
19. Pointer
20. Pillar bolt
21. Crankshaft timing gear
22. Screw - rear cover
23. Screw - rear cover to coolant pump
24. Rear cover

* New Patchlok bolt must be used when tensioner is refitted

FRONT TIMING BELT COMPONENTS - K16 VVC ENGINES

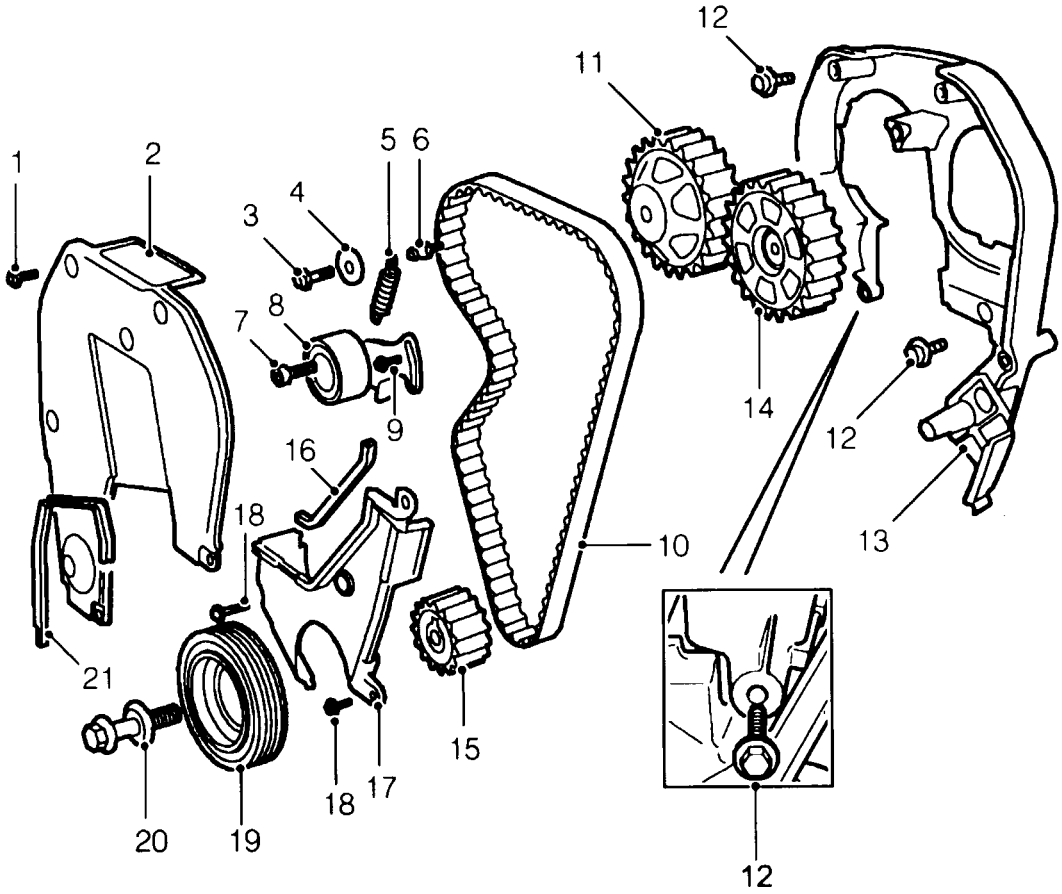

12M3527A

1. Screw - upper front cover
2. Upper front cover - timing belt
3. Camshaft gear bolt
4. Washer
5. Tensioner spring *
6. Pillar bolt *
7. Allen screw - tensioner pulley
8. Tensioner pulley and backplate
9. Flanged head screw - tensioner backplate
10. Camshaft timing belt
11. Front inlet camshaft timing gear
12. Screw - timing belt rear cover
13. Timing belt rear cover
14. Exhaust camshaft front timing gear
15. Crankshaft timing gear
16. Seal - lower front cover
17. Lower front cover
18. Screw - lower front cover
19. Crankshaft pulley
20. Crankshaft pulley bolt and washer
21. Seal - upper front cover

*These items are not fitted on production but are supplied with replacement timing belts.They must be removed and discarded on completion of belt tensioning.

REAR TIMING BELT COMPONENTS - K16 VVC ENGINES

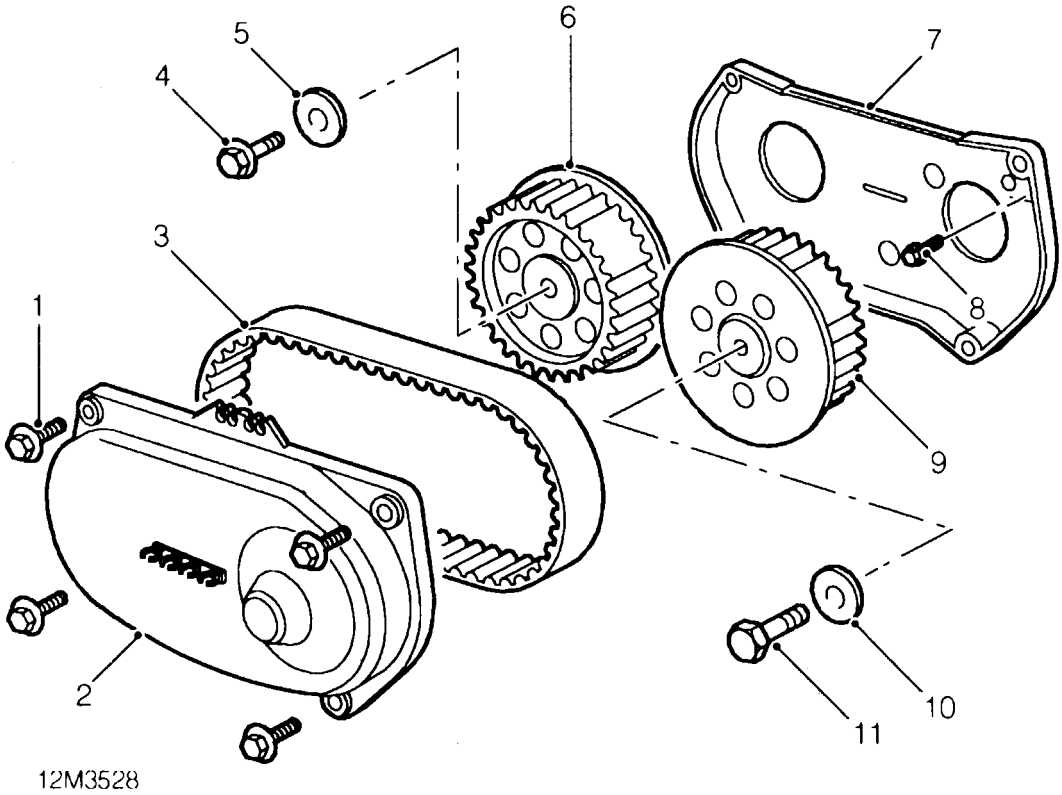

1. Screw - rear timing belt cover
2. Rear timing belt cover
3. Rear timing belt
4. Bolt - M8 - rear timing gear
5. Washer - rear timing gear bolt
6. Exhaust camshaft rear timing gear
7. Rear timing belt backplate
8. Bolt - rear timing belt backplate
9. Rear inlet camshaft timing gear
10. Washer - rear timing gear bolt
11. Bolt - M10 - rear timing gear

OPERATION

The K Series engine is built up from aluminium castings bolted together. These consist of three major castings; the cylinder head, cylinder block and a bearing ladder which is line bored to provide the main bearing bores. Attached to these are three minor castings; above the cylinder head, the camshaft carrier and the camshaft cover. Below the bearing ladder is an oil rail.

Each of the ten cylinder head bolts passes through the cylinder head, cylinder block and bearing ladder to screw into the oil rail. This puts the cylinder head, cylinder block and bearing ladder into compression with all the tensile loads being carried by the cylinder head bolts.

When the cylinder head bolts are removed; additional fixings are used to retain the bearing ladder to the cylinder block and the oil rail to the bearing ladder.

K8 engine: The cross flow cylinder head has two valves for each cylinder and the spark plugs set at an angle. The inlet ports are of equal tract, designed to ensure a balanced mixture throughout the speed range to improve combustion and reduce exhaust emissions. The single, overhead camshaft operates both inlet and exhaust valves via hydraulic tappets and is driven from the crankshaft by a timing belt. Belt tension is maintained by a spring loaded tensioner. The camshaft is retained by a one-piece camshaft carrier sealed and bolted to the cylinder head. Positive location is by means of a flange which also controls camshaft end-float.

K16 engine: The cross flow cylinder head is based on a four valve, central spark plug, combustion chamber with the inlet ports designed to induce swirl and control the speed of the induction charge. This serves to improve combustion and hence fuel economy, performance and exhaust emissions. The twin overhead camshafts operate the valves via hydraulic tappets, one camshaft operates the exhaust valves whilst the other operates the inlet valves. The camshafts are driven from the crankshaft by a timing belt, belt tension being maintained by either a spring loaded, manually adjusted tensioner or, on later engines by an automatic tensioner. The camshafts are retained by the camshaft carrier, which is line bored with the cylinder head.

Later engines are fitted with a plug top coil ignition system in which the conventional distributor is replaced by a camshaft sensor located in the camshaft carrier adjacent to the exhaust camshaft. Camshafts fitted to some early engines and all engines with plug top coil ignition have an integral reluctor ring which provides an input to the camshaft sensor. Twin coils are fitted on top of the camshaft cover, each coil supplying ht voltage to one pair of spark plugs.

Variable valve control (VVC): This system is fitted to some K16 engines. VVC is designed to provide variation in the valve open and close periods by independent positioning of the two inlet camshaft assemblies thereby giving optimum low speed driveability with no detriment to high speed performance.

Whilst the exhaust camshaft is similar to camshafts fitted to non VVC K16 engines, there are four inlet camshafts, assembled in pairs, each individual camshaft operating the inlet valves on one cylinder. The front pair of camshafts are driven, via the front VVC mechanism, by the camshaft timing belt; the rear pair of camshafts being driven via the rear VVC mechanism by the rear timing belt which is itself, driven by the exhaust camshaft. Independent positioning of each inlet camshaft is controlled by its respective VVC mechanism. The front and rear VVC mechanisms are connected to each other by the control shaft. Movement of the control shaft is controlled by the piston and rack assembly located within the hydraulic control unit. The piston and rack assembly moves in response to engine speed and load signals received from the MEMS ECM via two solenoids mounted on the hydraulic control unit housing. As the piston and rack moves up or down in response to the signals received, the control shaft rotates and alters the position of the valve timing mechanisms.

All engines: Self adjusting hydraulic tappets are fitted on top of each valve and are operated directly by the camshaft(s). The valve stem oil seals are moulded onto a metal base which also act as the valve spring seat on the cylinder head.

Exhaust valves fitted to later engines are of the carbon break type. A machined profile on the valve stem removes any build up of carbon in the combustion chamber end of the valve guide thereby preventing valves from sticking. These valves may be fitted to all early engines.

The stainless steel cylinder head gasket has moulded seals around all coolant, breather and oil apertures and has steel cylinder bore eyelets. Compression of the gasket is controlled by limiters at each end of the gasket.

The cylinder block is fitted with 'damp' cylinder liners, the bottom, stepped half of the damp liner, being a sliding fit into the lower part of the cylinder block. The liners are sealed in the block with a bead of Hylomar applied around the stepped portion of the liner. The seal at the cylinder head is effected by the cylinder head gasket with the liner top acting as a break between the combustion chamber and gasket.

The aluminium alloy, thermal expansion pistons have a semi- floating gudgeon pin which is offset towards the thrust side and has an interference fit in the small end of the connecting rod. Pistons and cylinder liners are supplied in two grades. Big-end bearing diametric clearance is controlled by three grades of selective shell bearing.

The five bearing, eight balance weight crankshaft has its end-float controlled by thrust washer halves at the top of the central main bearing. Bearing diametric clearance is controlled by three grades of selective shell bearing. Oil grooves are provided in the upper halves of main bearings No. 2, 3 and 4 to supply oil, via drillings in the crankshaft, to the connecting rod big-end bearings.

K8 engine lubrication system

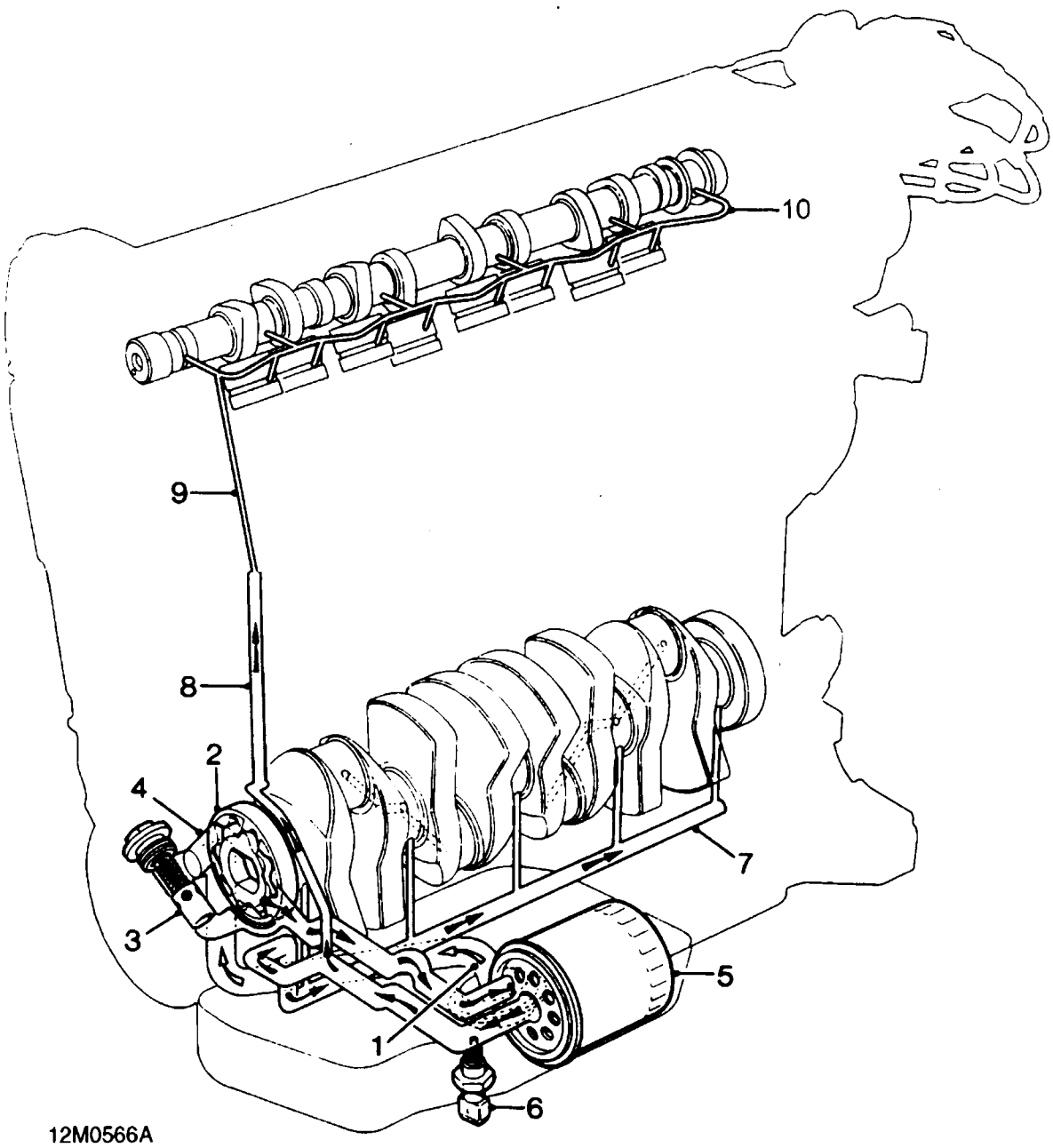

K16 engine lubrication system

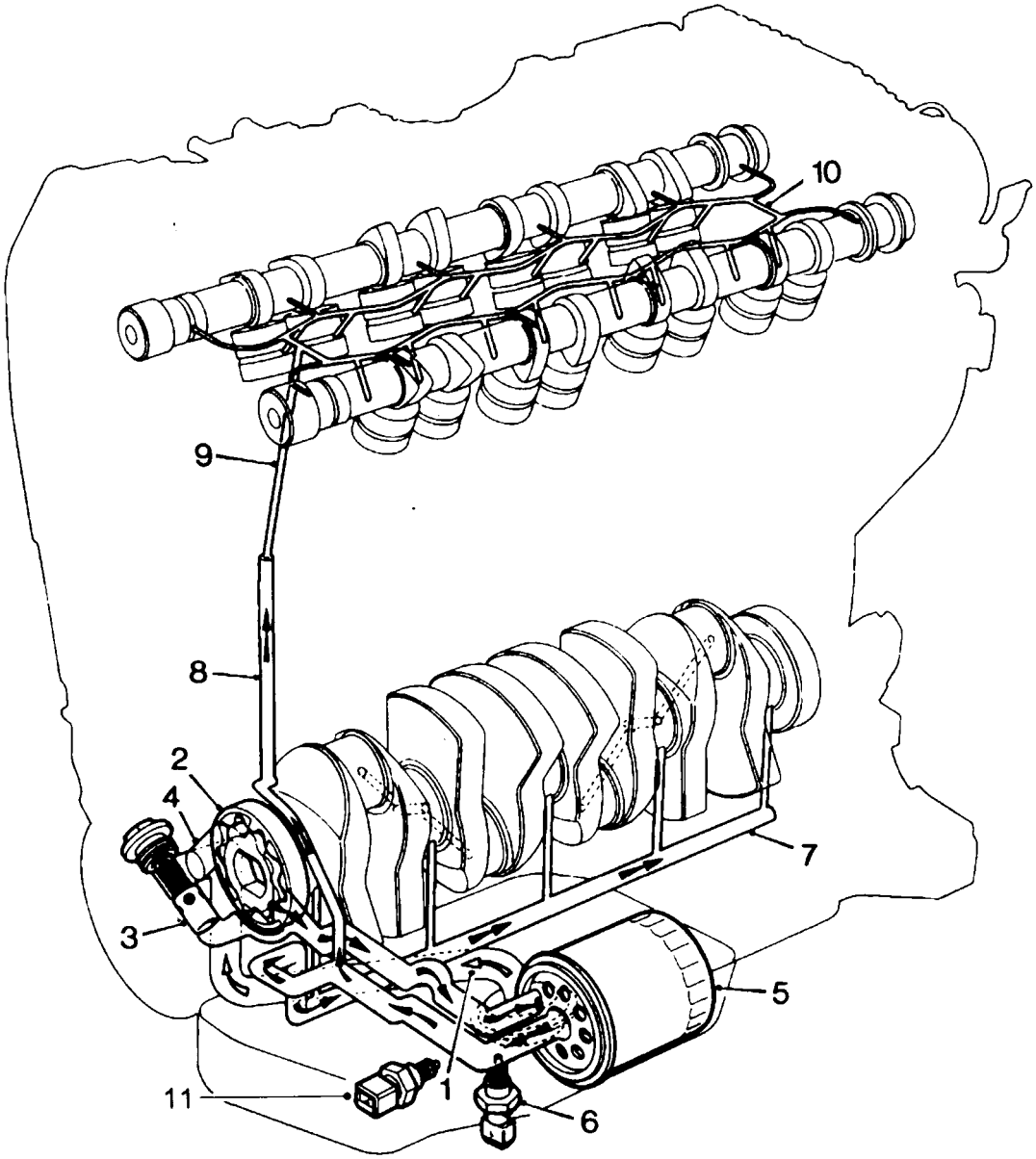

12M1758A

Non VVC camshafts illustrated

Lubrication

The lubrication system is of the full-flow filtration, forced fed type. The oil sump is of either pressed steel or alloy manufacture. Pressed steel sumps are sealed to the bearing ladder using a positively located gasket incorporating compression limiters. Alloy sumps are sealed to the bearing ladder with a bead of sealant applied to the sump flange.

Oil is drawn, via a strainer and suction pipe (1) in the sump, into the crankshaft driven oil pump (2) of the trochoid type which has an integral pressure relief valve (3), excess oil is diverted into the intake (4) of the oil pump. Oil is pumped through the full-flow cartridge type oil filter (5), mounted on an adapter attached to the oil pump housing. The low oil pressure sensor (6) is also screwed into the adapter and registers the oil pressure in the main oil gallery on the outflow side of the filter.

The main oil gallery (7) is fed through the oil rail below the main bearing ladder in which drillings direct the oil to the main bearings. Cross drillings in the crankshaft from No. 2 and 4 main bearings carry the oil to the big-end bearings. A passage in the oil pump housing connects to a drilling (8) in the cylinder block to oilways (9) in the cylinder head.

K8 engine: Oil is fed through the cylinder head to a drilling (10) in the one piece camshaft carrier to supply oil to each hydraulic tappet and camshaft bearing.

k16 engine: Oil is fed through the cylinder head to twin full length oilways (10) in the camshaft carrier to supply oil to each hydraulic tappet and camshaft bearing.

VVC engines: The VVC mechanisms are lubricated by oil fed via the inlet camshafts.

An oil temperature switch (11) is fitted in the oil filter head for certain models. In the event of engine oil temperature rising above a pre-set level, a warning light will illuminate on the instrument panel.

Crankcase ventilation

A positive crankcase ventilation system is used to vent blow-by gas from the crankcase to the air intake system.

K8 engine: Crankcase gas is drawn through a gauze oil separator in the camshaft cover and passes via a hose into either the carburetter or throttle body ahead of the throttle disc.

K16 engine: Crankcase gas is drawn through a gauze oil separator in the camshaft cover and passes via hoses into the throttle housing.

CONTENTS

Page

DESCRIPTION AND OPERATION

CYLINDER BLOCK COMPONENTS 3
CYLINDER HEAD COMPONENTS - K8 ENGINES 5
CYLINDER HEAD COMPONENTS - K16 NON VVC ENGINES FITTED WITH DISTRIBUTOR 7
CYLINDER HEAD COMPONENTS - K16 NON VVC ENGINES FITTED WITH PLUG TOP COIL IGNITION SYSTEM 9
CYLINDER HEAD COMPONENTS - K16 VVC ENGINES 11
TIMING BELT COMPONENTS - K8 ENGINES 12
TIMING BELT COMPONENTS - K16 NON VVC ENGINES FITTED WITH MANUAL TIMING BELT TENSIONER 13
TIMING BELT COMPONENTS - K16 NON VVC ENGINES FITTED WITH AUTOMATIC TIMING BELT TENSIONER 14
FRONT TIMING BELT COMPONENTS - K16 VVC ENGINES 15
REAR TIMING BELT COMPONENTS - K16 VVC ENGINES 16
OPERATION 17

OVERHAUL

CAMSHAFT TIMING BELT - K8 ENGINES 1
CAMSHAFT TIMING BELT - K16 ENGINES 4
OIL PUMP 15
COOLANT PUMP 19
THERMOSTAT 20
FLYWHEEL AND STARTER RING GEAR 21
CYLINDER HEAD 23
CYLINDER HEAD BOLTS INSPECTION 78
CRANKSHAFT, MAIN & BIG-END BEARINGS 79
PISTONS, RINGS & CYLINDER LINERS 92

DATA, TORQUE & TOOLS

DATA 1
TORQUE WRENCH SETTINGS 5
SERVICE TOOLS 7

CAMSHAFT TIMING BELT - K8 ENGINES

Remove

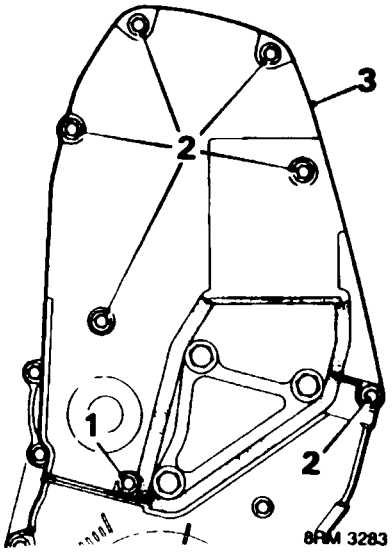

1. Slacken bottom bolt securing timing belt upper front cover.

NOTE: Remove bottom bolt when cover is not slotted.

2. Remove 6 bolts from timing belt upper front cover.
3. Remove timing belt upper front cover and seal.

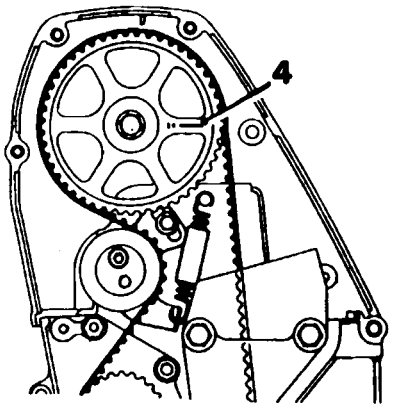

4. Rotate crankshaft clockwise to align camshaft gear timing marks with top face of cylinder head - 90° BTDC.

CAUTION: Do not use camshaft gear, gear retaining bolt or timing belt to rotate crankshaft.

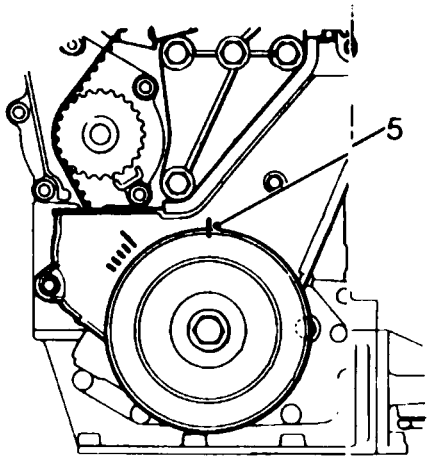

M124960

5. Check that timimg mark on crankshaft pulley is aligned with mark on timing belt lower cover.

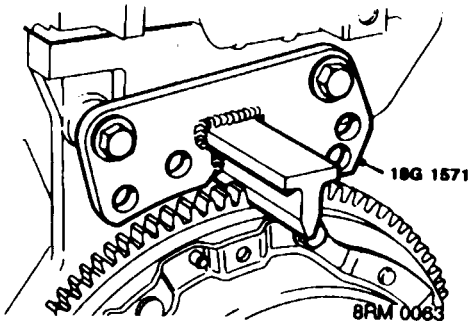

6. Position flywheel locking tool **18G 1571** to flywheel.
7. Secure with 2 bolts.

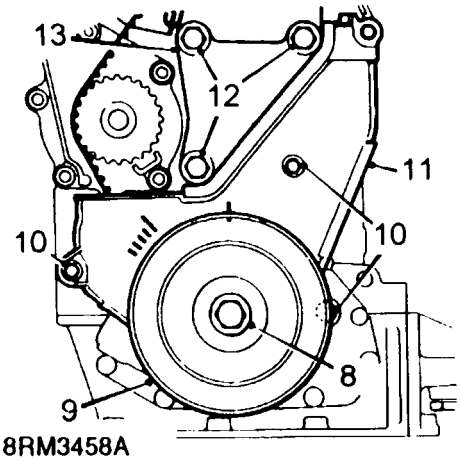

8. Remove crankshaft pulley bolt and washer.
9. Remove crankshaft pulley.
10. Remove 3 bolts securing timing belt lower cover.
11. Remove timing belt lower cover together with seals.
12. Remove 3 bolts, mounting bracket to engine.
13. Remove mounting bracket.

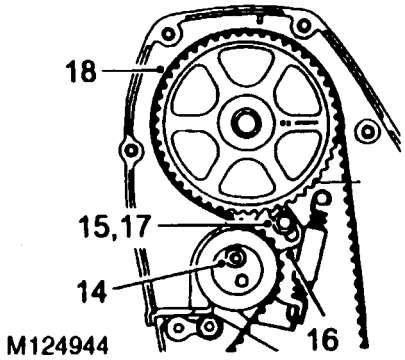

14. Slacken tensioner pulley Allen screw.
15. Slacken tensioner backplate screw.
16. Push tensioner pulley down to fully OFF position.
17. Tighten backplate screw to 10 Nm.
18. Ease timing belt from gears using the fingers only.
19. Discard timing belt.

CAUTION: Timing belt must always be replaced during engine overhaul. Do not rotate crankshaft with timing belt removed and cylinder head fitted.

Refit

1. Clean timing gears, coolant pump drive gear and tensioner pulley .

CAUTION: If the sintered gears have been subjected to prolonged contamination, they must be soaked in a solvent bath and then thoroughly washed in clean solvent before refitting. Because of the porous construction of sintered material, oil impregnated in the gears will emerge and contaminate the belt.

2. Check correct alignment of timing marks for 90° BTDC:
   Crankshaft gear dots align with flange on oil pump.
   Camshaft gear mark to right aligns with top face of cylinder head.

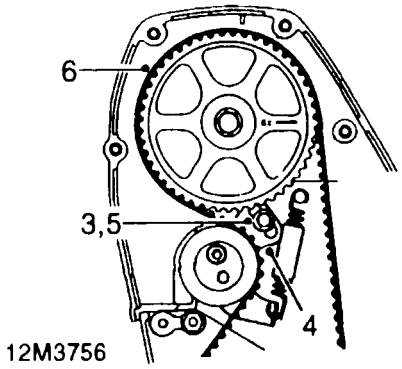

3. Slacken tensioner backplate screw, ensure tensioner moves fully through its adjustment range and returns under spring tension.
4. Push tensioner pulley down to fully OFF position.
5. Tighten backplate screw to 10 Nm.
6. Using the fingers only, fit a new timing belt over crankshaft timing gear, camshaft gear, tensioner pulley and coolant pump drive gear, ensure belt is positioned centrally on gears and pulley and that any slack in the belt is on the tensioner pulley side of the belt.
7. Clean all traces of Loctite from engine mounting bracket securing bolts and apply Loctite 542 to threads of bolts.
8. Fit engine mounting bracket, tighten bolts to 45 Nm.

9. Ensure inserts are fitted in timing belt lower cover.
10. Fit timing belt lower cover, ensuring correct position of seals, tighten screws to 10 Nm.

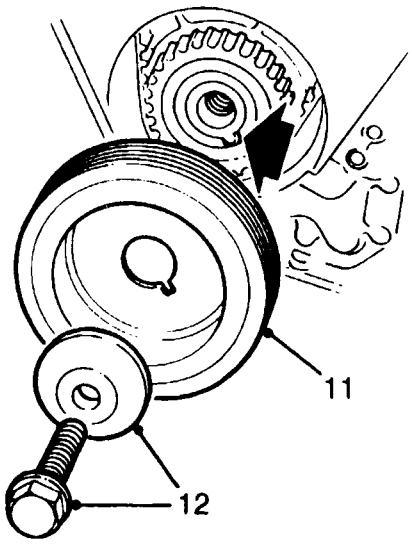

12M3757

11. Fit crankshaft pulley to crankshaft timing gear ensuring that indent on pulley locates over gear lug (arrowed).
12. Fit crankshaft pulley bolt and washer, tighten to 205 Nm.
13. Remove flywheel locking tool **18G 1571**.

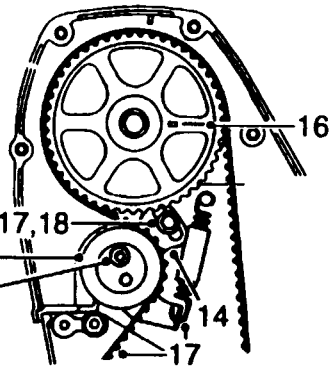

12M3758

14. Slacken tensioner backplate screw and tension timing belt by applying finger pressure to tensioner backplate.
15. With tensioner pulley against timing belt and backplate held in position, tighten backplate screw to 10 Nm.
16. Rotate crankshaft clockwise 2 complete revolutions and align camshaft gear timing mark with top face of cylinder head.

CAUTION: Do not use camshaft gear, gear retaining bolt or timing belt to rotate crankshaft.

17. Slacken tensioner backplate screw and check that belt is being tensioned by the tensioner spring.
18. Tighten tensioner backplate screw to 10 Nm and tensioner pulley Allen screw to 45 Nm.
19. Ensure inserts are fitted in timing belt upper front cover.
20. Fit timing belt upper front cover, ensuring correct position of seals, tighten screws and bolt to 5 Nm.

CAMSHAFT TIMING BELT - K16 ENGINES

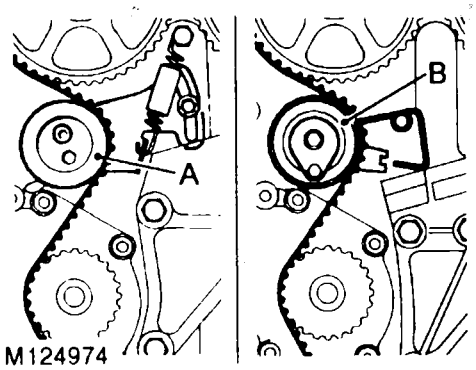

NOTE: Two types of timing belt tensioner are fitted to K16 engines, type A is a manual tensioner fitted to some K16 non VVC and all VVC engines. Type B is an automatic tensioner fitted to some K16 non VVC engines. Commencing engine numbers for the automatic tensioner are listed in Information. The tensioners and their timing belts are not interchangeable.
The manual timing belt tensioner spring fitted to K16 non VVC engines is fitted with a sleeve, whilst on VVC engines only a spring is fitted.

Camshaft timing belt - manual tensioner - remove

CAUTION: Timing belts fitted to engines with manual timing belt tensioners are not interchangeable with belts fitted to engines with automatic tensioners.

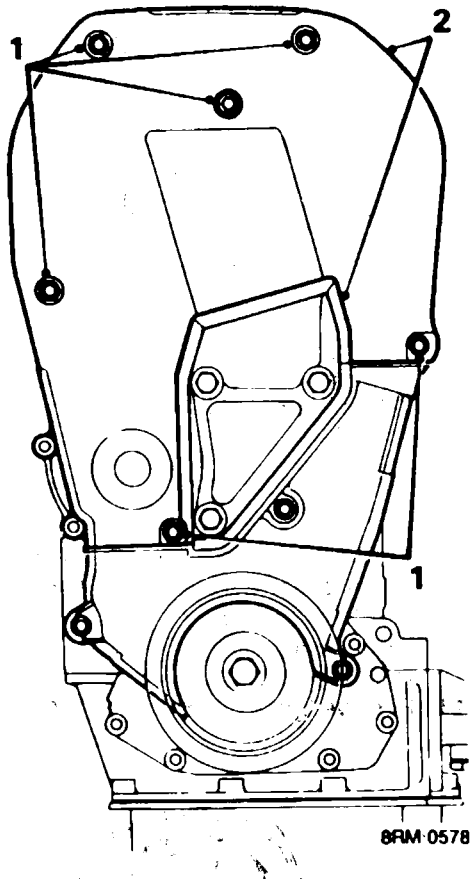

1. Slacken bottom bolt and remove 5 screws securing timing belt upper front cover.

NOTE: Remove bottom bolt when cover is not slotted.

2. Remove timing belt upper front cover and seal.

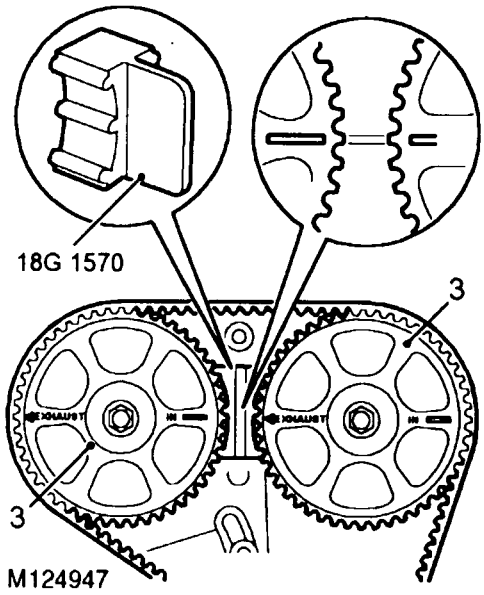

NOTE: VVC camshaft timing gear marks are shown in the inset on the illustration.

3. Rotate crankshaft clockwise to align camshaft gear timing marks - 90° BTDC.

CAUTION: Do not use camshaft gears, gear retaining bolts or timing belt to rotate crankshaft.

4. Fit camshaft gear locking tool **18G 1570.**

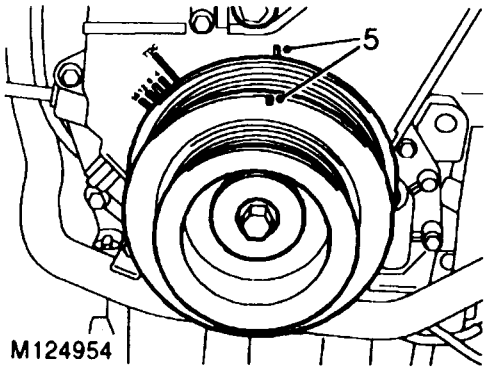

5. Check that timing mark on crankshaft pulley is aligned with mark on timing belt lower cover.

Flywheel not fitted with a reluctor ring

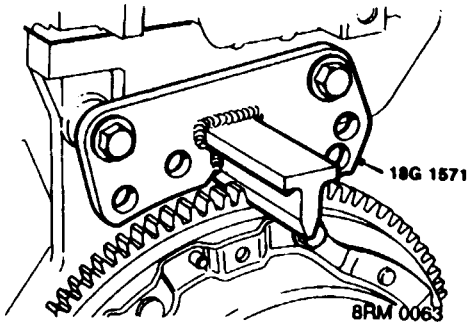

6. Fit flywheel locking tool **18G 1571.**
7. Secure with 2 bolts.

Flywheel fitted with a reluctor ring

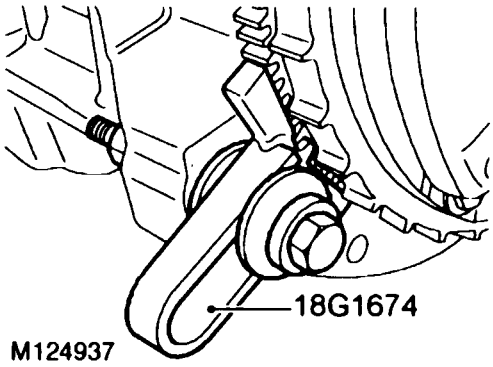

8. Fit flywheel locking tool **18G 1674,** tighten bolt.

CAUTION: Ensure tooth on tool 18G 1674 engages with teeth on flywheel not the reluctor ring

All engines

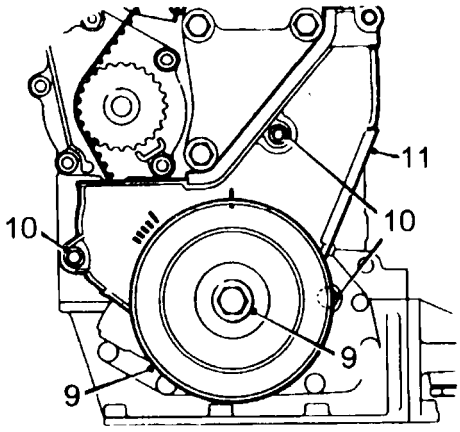

8RM3461A

9. Remove crankshaft pulley bolt and washer, remove crankshaft pulley.
10. Remove 3 bolts securing timing belt lower cover.
11. Remove timing belt lower cover together with seals.

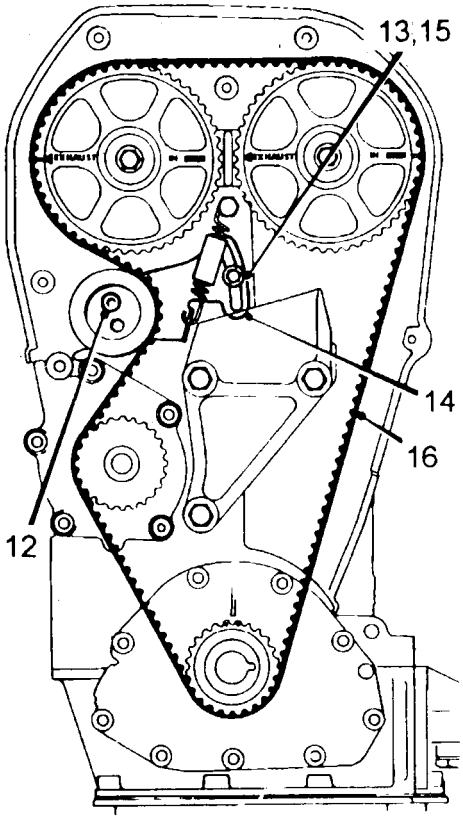

M124925

NOTE: Non VVC camshaft timing gears and tensioner spring illustrated.

12. Slacken tensioner pulley Allen screw.
13. Slacken tensioner backplate screw.
14. Push tensioner pulley down to fully OFF position.

NOTE: VVC engines:- Tensioner spring and pillar bolt are only fitted for tensioning replacement timing belts.

15. Tighten backplate screw to 10 Nm.
16. Ease timing belt from gears using the fingers only.
17. Discard timing belt.

CAUTION: Timing belt must always be replaced during engine overhaul. Do not rotate crankshaft with timing belt removed and cylinder head fitted.

Camshaft timing belt - manual tensioner - refit

CAUTION: VVC engines:- When a replacement timing belt is to be fitted, it will be necessary to fit the tensioner spring and pillar bolt supplied with the replacement belt to adjust belt tension.

1. Clean timing gears, coolant pump drive gear and tensioner pulley.

CAUTION: If the sintered gears have been subjected to prolonged oil contamination, they must be soaked in a solvent bath and then thoroughly washed in clean solvent before refitting. Because of the porous construction of sintered material, oil impregnated in the gears will emerge and contaminate the belt.

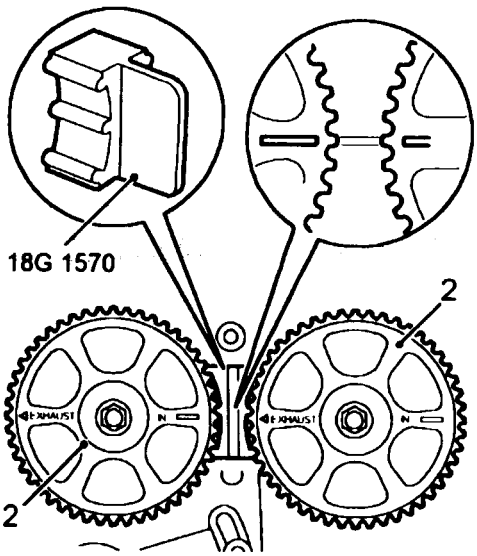

M124929

NOTE: VVC camshaft gear timing marks are shown in the inset on the illustration.

2. Check correct alignment of camshaft gear timing marks, fit camshaft gear locking tool **18G 1570.**

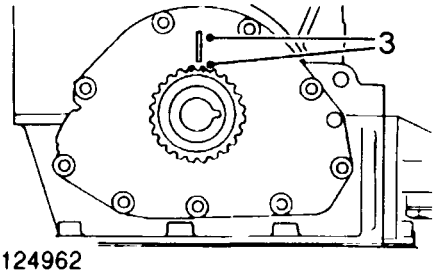

M124962

3. Check that crankshaft gear timing marks are aligned with flange on oil pump - 90° BTDC.

Flywheel not fitted with a reluctor ring

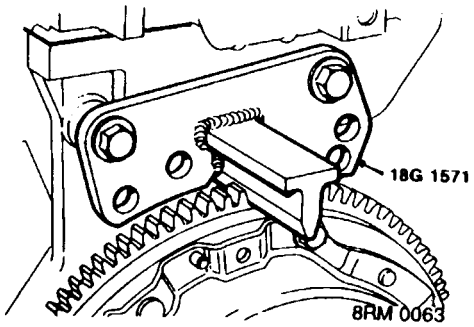

4. Fit flywheel locking tool **18G 1571**, secure with 2 bolts.

Flywheel fitted with a reluctor ring

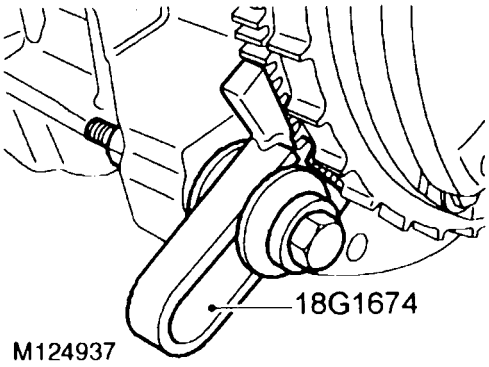

5. Fit flywheel locking tool **18G 1674**, tighten bolt.

CAUTION: Ensure tooth on tool 18G 1674 engages with teeth on flywheel not the reluctor ring.

6. *VVC engines:* Fit tensioner spring and pillar bolt supplied with replacement timing belt, connect spring to tensioner backplate and pillar bolt.

CAUTION: Ensure spring is the correct type for the engine being worked on:-

Non VVC engines:- Spring is fitted with a sleeve.
VVC engines:- Spring is not fitted with a sleeve.

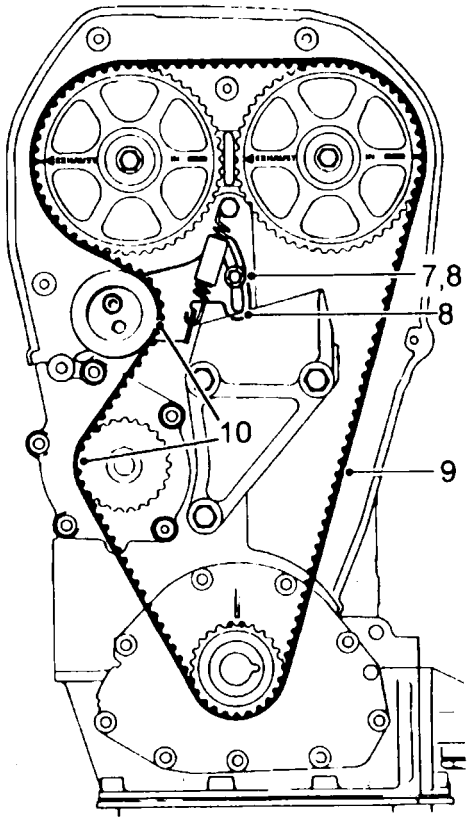

NOTE: Non VVC camshaft timing gears and tensioner spring illustrated.

7. Slacken tensioner backplate screw, ensure tensioner moves fully through its adjustment range and returns under spring tension.
8. Push tensioner down to fully OFF position, tighten tensioner backplate screw to 10 Nm.
9. Using the fingers only, fit a new timing belt over crankshaft timing gear and then over camshaft gears keeping belt taut between crankshaft timing gear and exhaust camshaft gear.
10. Ease timing belt over tensioner pulley and coolant pump drive gear ensuring belt is positioned centrally on gears and pulley.
11. Ensure inserts are fitted in timing belt lower cover.
12. Fit timing belt lower cover, ensuring correct position of seals, tighten screws to 9 Nm.

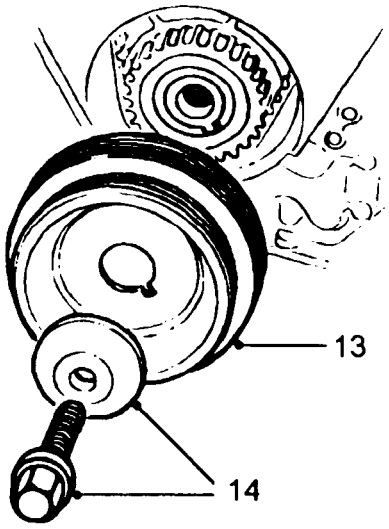

M124927

13. Fit crankshaft pulley to crankshaft timing gear ensuring that indent on pulley locates over lug on gear.
14. Secure with crankshaft pulley bolt and washer, tighten to 205 Nm.
15. Remove camshaft and flywheel locking tools.

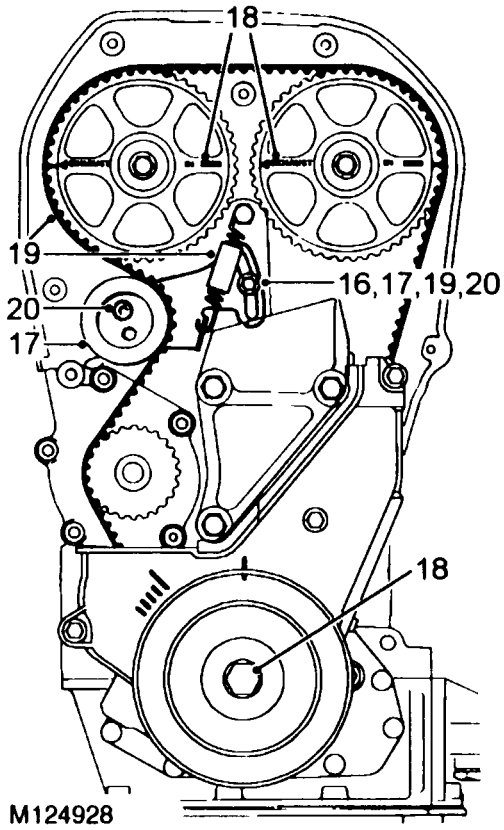

M124928

NOTE: Non VVC camshaft timing gears and tensioner spring illustrated.

16. Slacken tensioner backplate screw and tension timing belt by applying finger pressure to tensioner backplate.
17. With tensioner pulley against timing belt and backplate held in position, tighten backplate screw to 10 Nm.
18. Rotate crankshaft clockwise 2 complete revolutions and align camshaft gear timing marks.

CAUTION: Do not use camshaft gears, gear retaining bolts or timing belt to rotate crankshaft.

19. Slacken tensioner backplate screw and check that belt is being tensioned by the tensioner spring.
20. Tighten tensioner backplate screw to 10 Nm and tensioner pulley Allen screw to 45 Nm.

VVC engines

21. Disconnect tensioner spring from pillar bolt, release spring from tensioner; remove and discard spring.
22. Remove and discard pillar bolt.

All engines

23. Ensure inserts are fitted in timing belt front upper cover.
24. Fit timing belt upper front cover, ensuring correct position of seals, tighten screws and bottom bolt to 5 Nm.

Camshaft timing belt - automatic tensioner - remove

CAUTION: Timing belts fitted to engines with automatic timing belt tensioners are not interchangeable with those fitted to engines with manual tensioners.

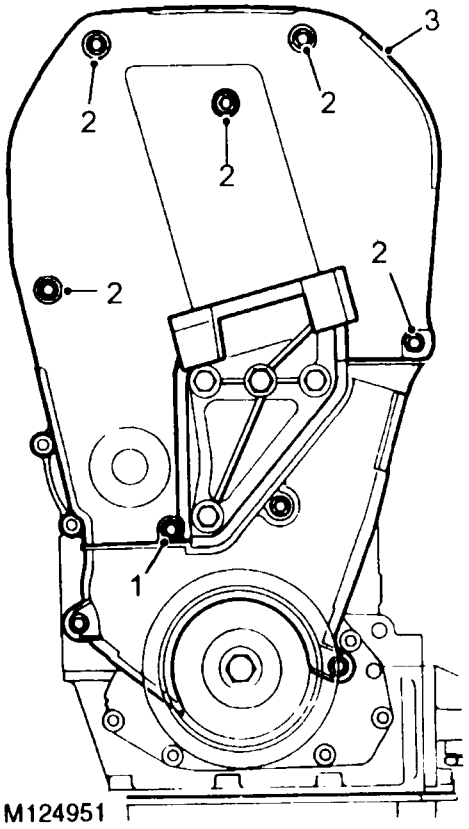

1. Slacken but do not remove bolt securing bottom of timing belt upper front cover.

NOTE: Remove bolt when cover is not slotted.

2. Noting fitted position of longest screw, remove 5 screws securing timing belt upper front cover.
3. Remove timing belt upper front cover together with seal.

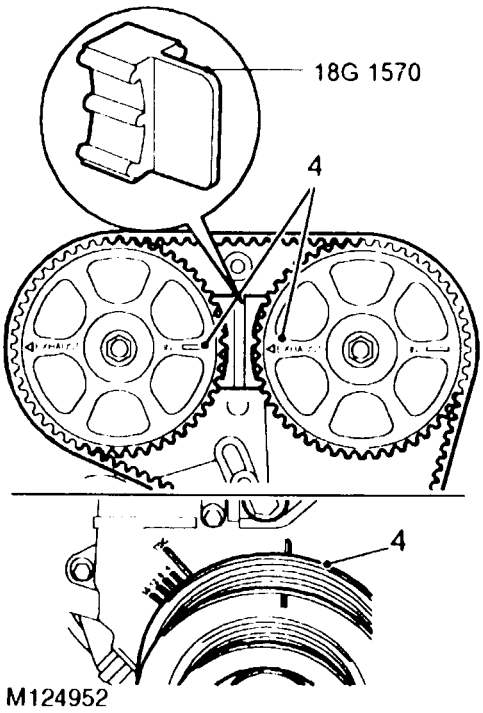

4. Rotate crankshaft clockwise to align camshaft gear timing marks - 90° BTDC.

CAUTION: Do not use camshaft gears, gear retaining bolts or timing belt to rotate crankshaft.

5. Fit camshaft gear locking tool **18G 1570**.

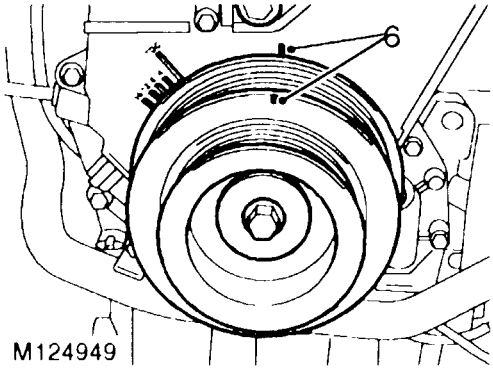

6. Check that timing mark on crankshaft pulley is aligned with mark on timing belt lower cover.

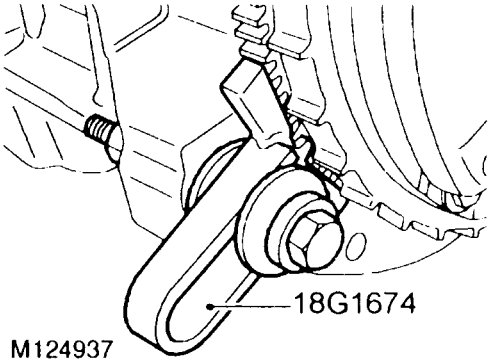

7. Fit flywheel locking tool **18G 1674**, tighten bolt.

CAUTION: Ensure tooth on tool 18G 1674 engages with teeth on flywheel not the reluctor ring.

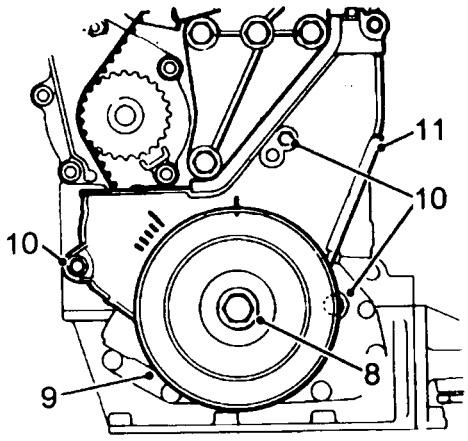

M124945

8. Remove crankshaft pulley bolt and washer.
9. Remove crankshaft pulley.
10. Remove 3 bolts securing timing belt lower cover.
11. Remove timing belt lower cover together with seals.

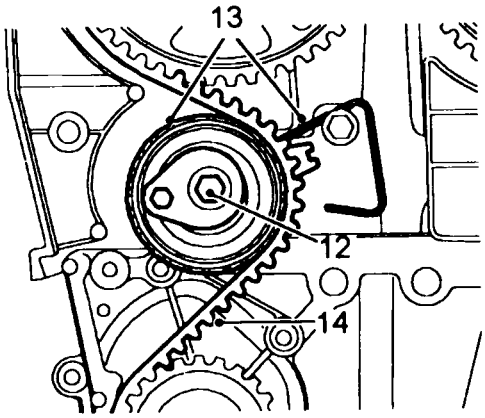

M124955

12. Remove and discard timing belt tensioner bolt.
13. Disengage index wire from its fitted position whilst at the same time removing the timing belt tensioner.
14. Ease timing belt from gears using the fingers only.
15. Discard timing belt.

CAUTION: Timing belt must always be replaced during engine overhaul. Do not rotate crankshaft with timing belt removed and cylinder head fitted.

Camshaft timing belt - automatic tensioner - refit

CAUTION: If the sintered gears have been subjected to prolonged oil contamination, they must be soaked in a solvent bath and then thoroughly washed in clean solvent before refitting. Because of the porous construction of sintered material, oil impregnated in the gears will emerge and contaminate the belt.

1. Clean timing gears, coolant pump drive gear and tensioner pulley.

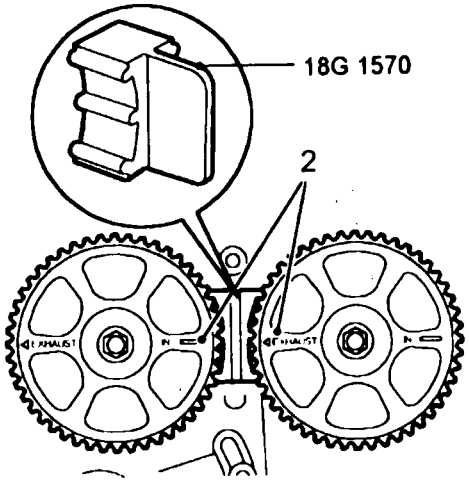

M124961

2. Check correct alignment of camshaft gear timing marks, fit camshaft gear locking tool **18G 1570.**

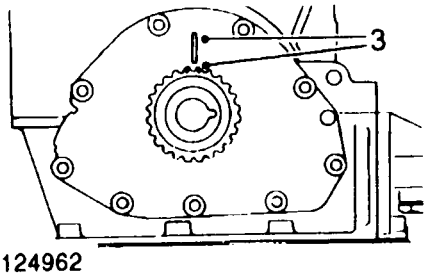

M124962

3. Check that crankshaft gear timing marks are aligned with flange on oil pump - 90° BTDC.

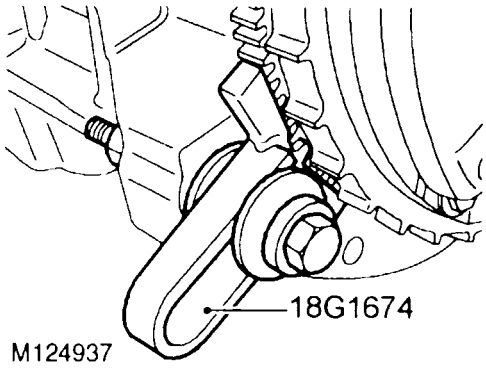

M124937

4. Fit flywheel locking tool **18G 1674.**

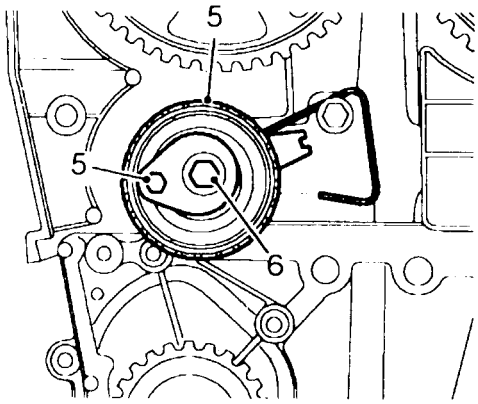

M124956

5. Fit timing belt tensioner ensuring that index wire is positioned over pillar bolt and that tensioner lever is at 9 o'clock position.
6. Fit a new tensioner securing bolt and tighten bolt until it is just possible to move tensioner lever.
7. Using the fingers only, fit a new timing belt over crankshaft gear, then camshaft gears, tensioner pulley and coolant pump drive gear ensuring that the belt run between the crankshaft gear and the exhaust camshaft gear is kept taut.
8. Check that timing belt is positioned centrally around gears and tensioner pulley.
9. Ensure inserts are fitted in timing belt lower cover.

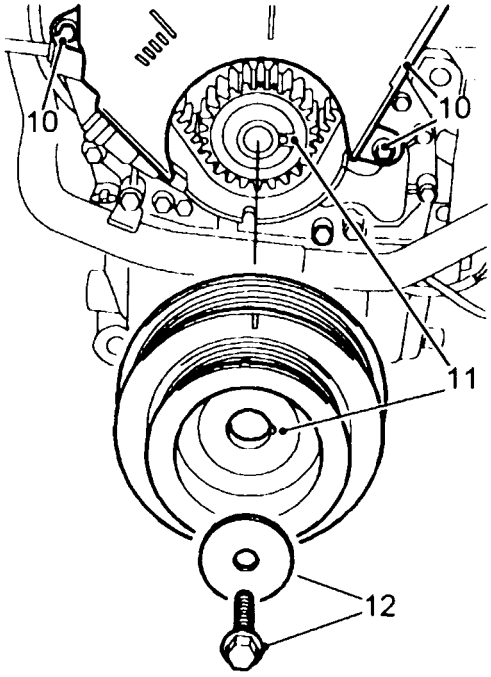

M124953

10. Fit timing belt lower cover ensuring correct position of seals, fit screws and tighten to 9 Nm.
11. Fit crankshaft pulley to crankshaft gear ensuring that indent on pulley locates over lug on gear.
12. Fit crankshaft pulley bolt and washer, tighten to 205 Nm.
13. Remove camshaft gear and flywheel locking tools **18G 1570** and **18G 1674**.

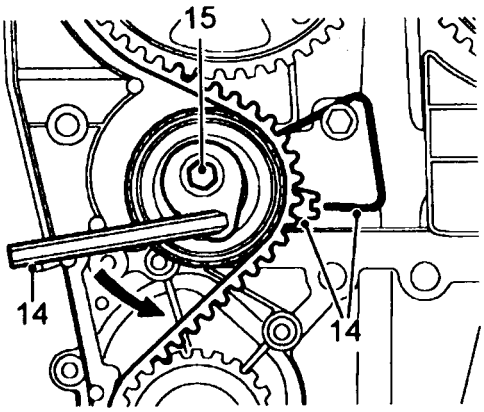

M124957

14. Using a 6 mm Allen key, rotate tensioner anti-clockwise and align the centre of the indent on the tensioner pointer to the index wire.

CAUTION: Ensure that pointer approaches index wire from above. Should pointer go past index wire, release tension completely and repeat tensioning procedure.

15. Ensuring that pointer maintains correct position, tighten tensioner bolt to 25 Nm.

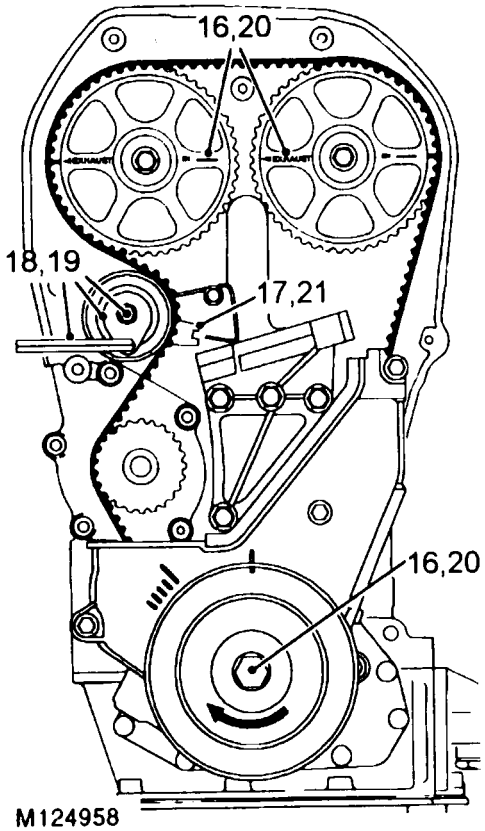

M124958

16. Using crankshaft pulley bolt, rotate crankshaft 2 turns clockwise and align camshaft gear timing marks.

CAUTION: Do not use camshaft gears, gear retaining bolts or timing belt to rotate crankshaft.

17. Check that pointer is still correctly aligned with index wire.

CAUTION: If pointer is not correctly aligned, carry out the following procedure.

18. Slacken tensioner bolt until it is just possible to move the tensioner lever. Using a 6 mm Allen key, rotate tensioner lever clockwise until pointer is just above the index wire then rotate tensioner lever anti-clockwise until pointer is correctly aligned with index wire.
19. Ensuring that pointer maintains correct position tighten tensioner bolt to 25 Nm.
20. Using crankshaft pulley bolt, rotate crankshaft 2 turns clockwise and align camshaft gear timing marks.
21. Check that pointer is still correctly aligned with index wire.

22. Ensure inserts are fitted in timing belt upper front cover.
23. Fit timing belt upper front cover ensuring correct position of seal, fit screws, tighten screws and bottom bolt to 5 Nm.

OIL PUMP

Remove

1. Remove and discard camshaft timing belt.
2. Remove crankshaft timing gear.

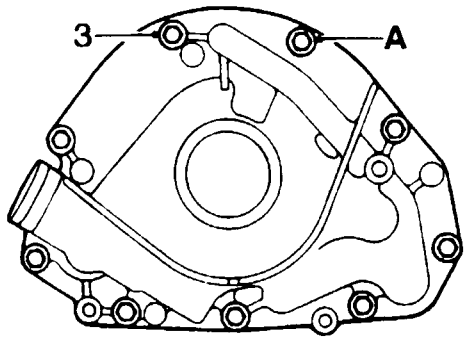

12M1765

3. Noting fitted position of M6 x 20 bolt 'A,' remove and discard 9 bolts securing oil pump to cylinder block.

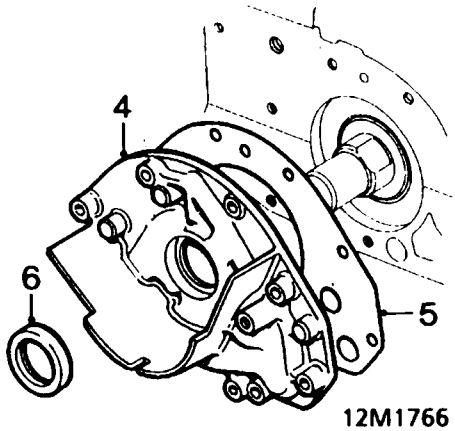

12M1766

4. Remove oil pump assembly.

NOTE: Dowel located.

5. Remove and discard oil pump gasket.
6. Remove and discard crankshaft front oil seal.

Inspection

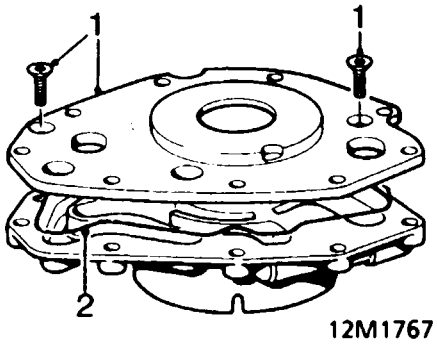

1. Remove 2 screws and cover plate.
2. Remove and discard cover plate seal.

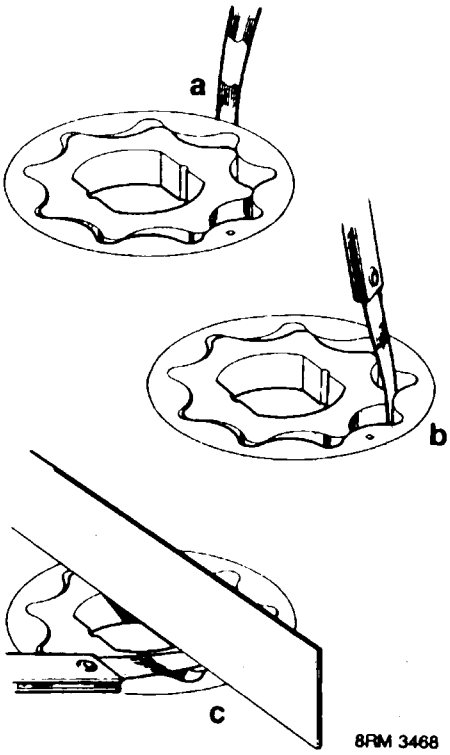

3. Check rotor clearances:
   a. Outer rotor to housing = 0.28 - 0.36 mm
   b. Inner rotor tip = 0.05 - 0.13 mm
   c. Rotor end float = 0.02 - 0.06 mm
   Renew pump assembly if housing is scored or clearances are excessive.

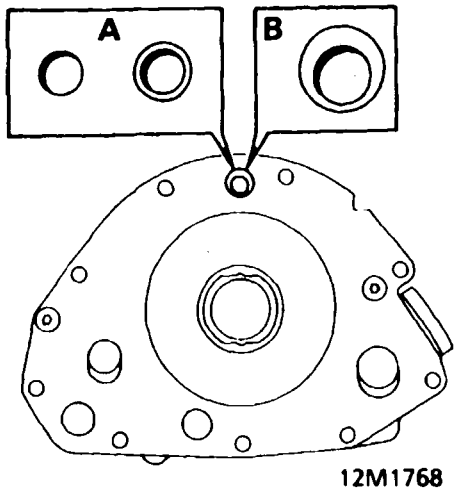

CAUTION: Two types of oil pump have been fitted. The early type oil pumps, fitted up to Engine No. 820000, can be identified by having either a plain 6 mm diameter oil feed hole or an 8 mm diameter oil feed hole with a 6 mm counterbore - A in illustration. Later type oil pumps, fitted from Engine No. 820000 all have a 12 mm diameter oil feed hole with an 8 mm diameter offset counterbore - B in illustration. Later type oil pumps may be fitted as replacements to all engines but early type pumps may not be fitted to engines from Engine No. 820000.

4. Remove all traces of Loctite from cover plate securing screws and tapped holes in oil pump body; ensure screw holes are clean and dry.

Oil pressure relief valve

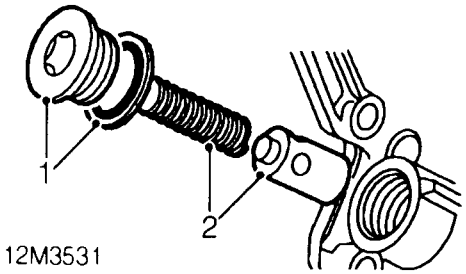

1. Unscrew plug, discard sealing washer.
2. Remove spring and relief valve sleeve assembly.
3. Check that valve sleeve slides freely in bore and that bore and sleeve are free from scoring and corrosion.

NOTE: Light corrosion may be removed using grade 600 emery cloth soaked in engine oil.

4. Check free length of spring:
   Spring free length = 38.9 mm

   Replace relief valve as an assembly if scoring of plunger is evident or free length of spring is less than specified. Replace oil pump if relief valve bore is scored.
5. Remove all traces of Loctite from plug and threads in relief valve bore.

CAUTION: Do not use a tap.

6. Apply Loctite 577 to threads of plug.
7. Fit plug, use a new sealing washer.

Oil pump assembling

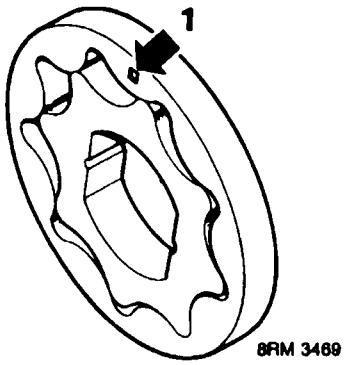

1. Ensure outer rotor identification marking faces outward.
2. Lubricate pump rotors with engine oil.
3. Lubricate a new cover plate seal with engine oil.
4. Fit cover plate seal and cover plate.
5. Apply Loctite 222 to cover plate securing screws, fit and tighten screws.
6. Check that pump rotates freely.

Oil pump - refit

1. Clean oil pump.
2. Using gasket removal spray and a plastic scraper, remove all traces of gasket from oil pump.
3. Clean oil seal running surface on crankshaft.
4. Fit a new, dry, oil pump gasket.
5. Turn oil pump rotor to align drive with crankshaft.
6. Fit oil seal protector sleeve, from seal kit, over crankshaft end.

NOTE: This will assist in locating oil pump inner rotor.

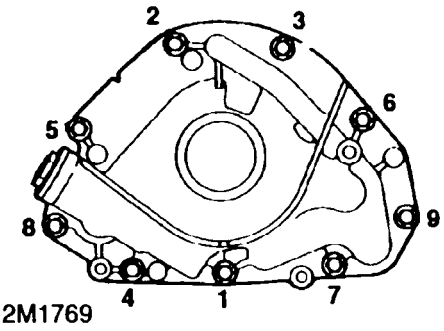

12M1769

7. Fit oil pump, fit new Patchlok bolts, M6 x 20 bolt at position 3. Tighten in sequence shown to 10 Nm.

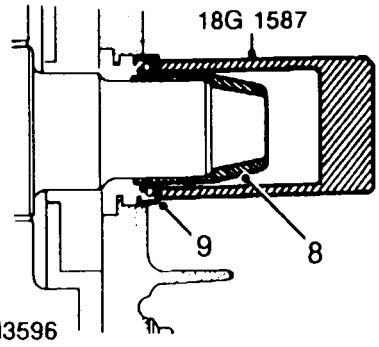

12M3596

8. Ensure oil seal protector sleeve is located over end of crankshaft.
9. Position new crankshaft front oil seal on crankshaft against oil pump housing. Drift seal into position using tool **18G 1587**.

CAUTION: Oil seal must be fitted dry.

10. Remove tool **18G 1587** and oil seal protector sleeve.
11. Clean crankshaft timing gear.
12. Fit crankshaft timing gear.
13. Fit and adjust a new camshaft timing belt.

COOLANT PUMP

Remove

1. Remove and discard camshaft timing belt.
2. Remove thermostat and housing.

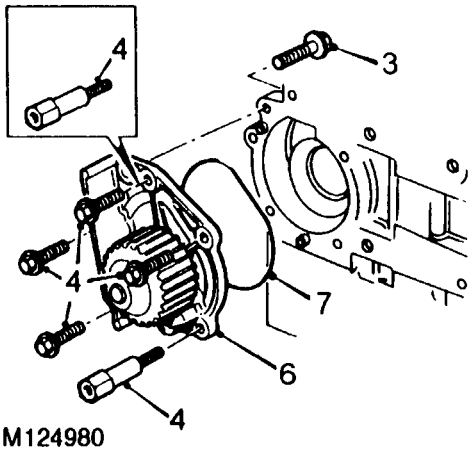

3. *Rear cover fitted:* Remove screw securing timing belt rear cover to coolant pump.
4. Noting their fitted position, remove bolts and pillar bolt securing coolant pump.

NOTE: 2 pillar bolts are fitted to some engines.

5. Release coolant pump from 2 dowels and rear cover.
6. Remove coolant pump.
7. Remove and discard 'O' ring from pump.

Inspection

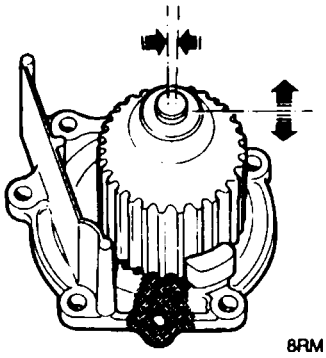

1. Check for movement of pump spindle in bearing and for coolant leakage from seal.

Refit

1. Clean pump, mating face and dowels.
2. Fit new 'O' ring to coolant pump, use RTV sealant to retain 'O' ring.

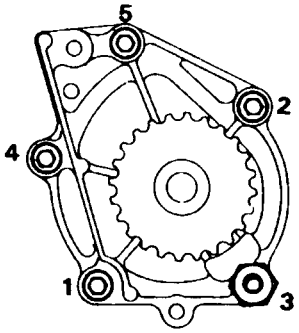

3. Fit coolant pump to cylinder block, fit bolts and pillar bolt(s) and tighten in sequence shown to 10 Nm.
4. *Rear cover fitted:* Fit timing belt rear cover securing screw, tighten to 9 Nm.
5. Fit thermostat and housing.
6. Fit and adjust a new camshaft timing belt.

THERMOSTAT

Remove

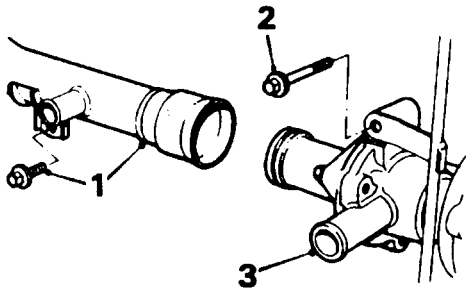

12M0558

1. Remove 2 bolts securing coolant rail to cylinder block, release rail from thermostat cover.
2. Remove bolt securing thermostat housing and dipstick tube to cylinder block.
3. Withdraw thermostat housing from coolant pump.

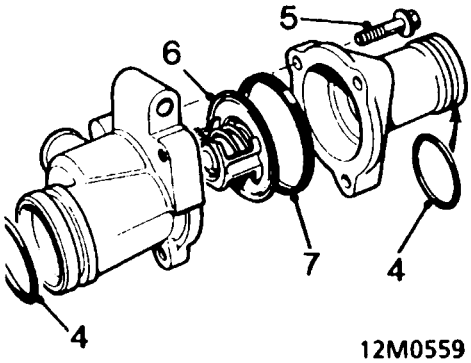

12M0559

4. Remove and discard 'O' rings from thermostat housing and cover.
5. Remove 3 bolts and remove cover from thermostat housing.
6. Withdraw thermostat from housing.
7. Remove and discard seal from thermostat.

Inspection

1. Test thermostat using thermostat test equipment, renew thermostat if necessary.
2. Thermostat open = 88° C
   Starts to open = 85° to 91° C
   Fully open = 100° C

Refit

1. Clean thermostat housing, cover and sealing faces.
2. Lubricate new 'O' rings with silicone grease and fit to thermostat housing and cover.
3. Fit a new seal to thermostat.
4. Align and fit thermostat to shoulder in thermostat housing.
5. Fit cover to thermostat housing, fit and tighten bolts to 8 Nm.

CAUTION: Torque figure must not be exceeded.

6. Fit thermostat housing to coolant pump, align dipstick tube bracket, fit and tighten bolt to 10 Nm.
7. Connect coolant rail to thermostat cover.
8. Align coolant rail to cylinder block, fit and tighten bolts to 25 Nm.

FLYWHEEL AND STARTER RING GEAR

Flywheel - remove

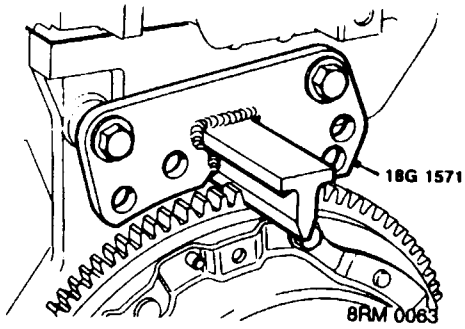

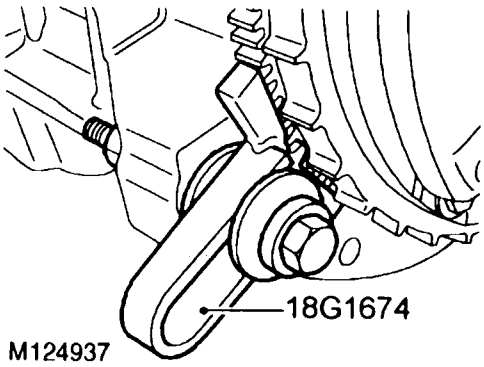

1. Fit flywheel locking tool:
   Flywheel without reluctor ring use **18G 1571.**
   Flywheel with reluctor ring use **18G 1674.**

CAUTION: Ensure tool engages teeth on flywheel not the reluctor ring.

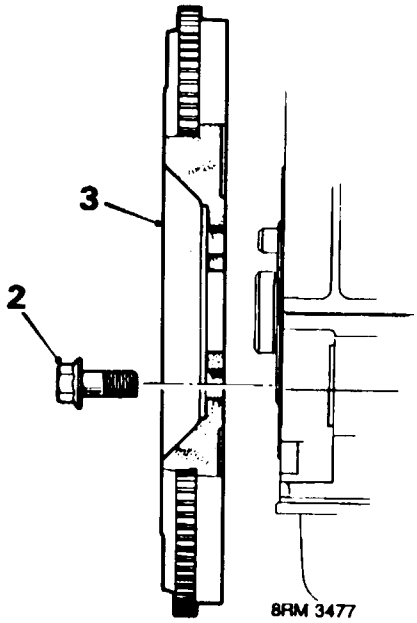

NOTE: Flywheel without reluctor ring illustrated.

2. Remove and discard 6 bolts securing flywheel.
3. Using assistance, remove flywheel from crankshaft.

NOTE: Dowel located.

Starter ring gear - remove

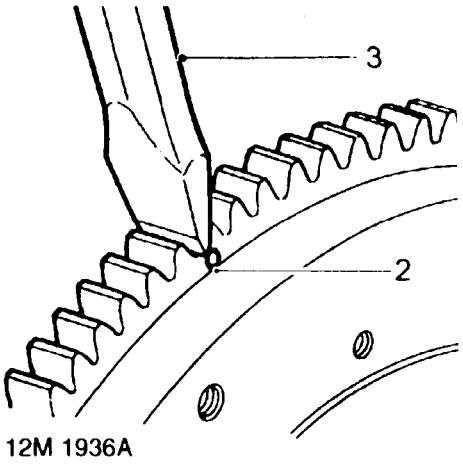

1. Remove flywheel.
2. Drill a 3 mm diameter hole at root of 2 teeth.
3. Apply a cold chisel to root of teeth, break ring gear and remove from flywheel.

WARNING: Suitable eye protection must be worn.

Starter ring gear - refit

1. Heat ring gear evenly to 350°C, indicated by light BLUE colour. Locate ring gear on flywheel and press hard against flange.

WARNING: Handle hot ring gear with care.

2. Allow ring gear to air cool.
3. Fit flywheel.

Flywheel - refit

CAUTION: Flywheels fitted to VVC engines have a reluctor ring with 4 teeth at unequally spaced intervals missing whilst flywheels fitted to engines with plug top coil ignition have reluctor rings with equally spaced teeth . If the flywheel is to be replaced, it is essential that the replacement is of the correct type.

1. Clean flywheel and crankshaft faces. Use a clean bolt with two saw cuts along threads and clean adhesive from threaded holes in crankshaft.
2. Using assistance, fit flywheel to crankshaft, fit and tighten new Patchlok bolts to 80 Nm.

CYLINDER HEAD

Cylinder head - K8 engines - remove

⚠ **CAUTION: If crankshaft is to be removed during overhaul, it will be necessary to check and record crankshaft end-float prior to removing cylinder head.**

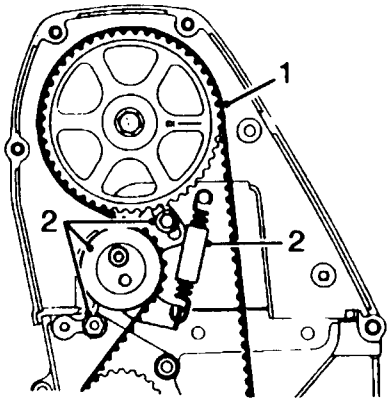

12M0553A

1. Remove and discard camshaft timing belt.

⚠ **CAUTION: Do not rotate crankshaft whilst timing belt is removed and cylinder head is fitted, pistons will contact the valves.**

2. Disconnect tensioner spring, remove pillar bolt, screw, tensioner and spring.
3. Disconnect ht leads from spark plugs.

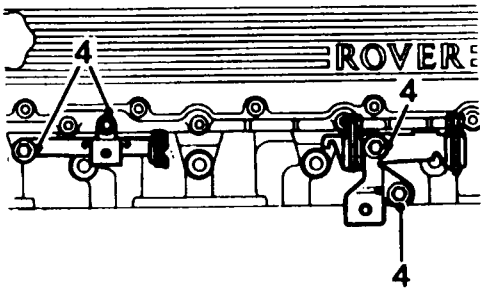

12M 0552 A

4. Remove 4 screws securing ht lead brackets, remove brackets.

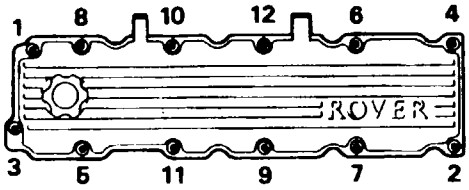

12M0549

5. Using sequence shown, progressively slacken and remove 12 bolts securing camshaft cover.
6. Remove camshaft cover, discard gasket.

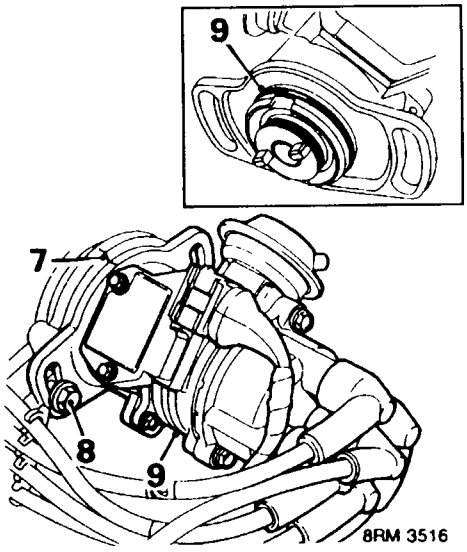

8RM 3516

7. Mark distributor flange for refitting reference.
8. Remove 2 screws securing distributor.
9. Remove distributor, discard 'O' ring.
10. Remove any debris from spark plug recesses, remove and discard 4 spark plugs.

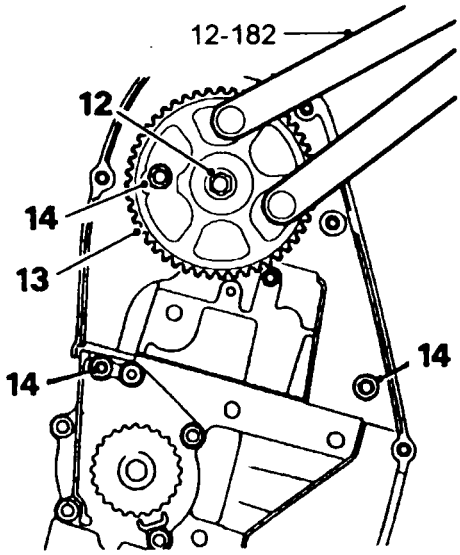

12M 0548A

11. Use tool **12-182** to hold camshaft gear against rotation.
12. Remove bolt and plain washer securing camshaft gear.
13. Remove camshaft gear.
14. Remove screws securing upper part of timing belt rear cover to cylinder head and screw securing rear of cover to coolant pump, remove cover.

NOTE: This is the longest of the rear cover securing screws.

15. Check and record crankshaft end-float.

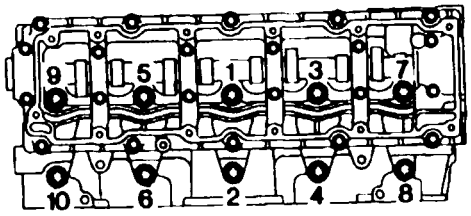

12M 0561

16. Using sequence shown, progressively slacken 10 cylinder head to oil rail bolts. Remove bolts and store in fitted order.

CAUTION: Removal of cylinder head bolts will result in a 'tightening-up' of the crankshaft, rotation of crankshaft must, therefore, be kept to a minimum. Do not rotate crankshaft until cylinder liner retainer clamps 18G 1736 are fitted.

17. Using assistance, remove cylinder head assembly.

CAUTION: Cylinder head is dowel located, do not tap it sideways to free it from cylinder block. Place cylinder head on wooden blocks to prevent damaging valves.

18. Remove and discard cylinder head gasket.

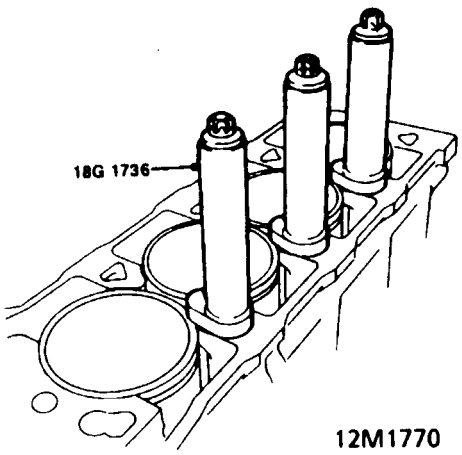

12M1770

19. Assemble cylinder liner retainer clamps **18G 1736** to cylinder head bolts. Position retainer clamps on cylinder liners ensuring clamps do not protrude over liner bores. Screw cylinder head bolts into oil rail and tighten sufficiently to retain clamps.

CAUTION: Ensure that bolts used are those originally fitted in that location.

Cylinder head - K16 Non VVC engines fitted with distributor - remove

CAUTION: If crankshaft is to be removed during overhaul it will be necessary to check and record crankshaft end-float prior to removing cylinder head.

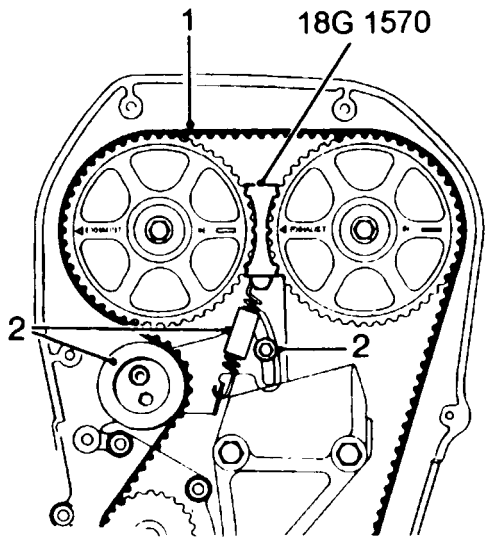

M124930

1. Remove and discard camshaft timing belt.

CAUTION: Do not rotate crankshaft whilst timing belt is removed and cylinder head is fitted, pistons will contact the valves.

2. *Engines fitted with manual timing belt tensioner:-* Disconnect tensioner spring, remove bolt, screw, tensioner and spring.

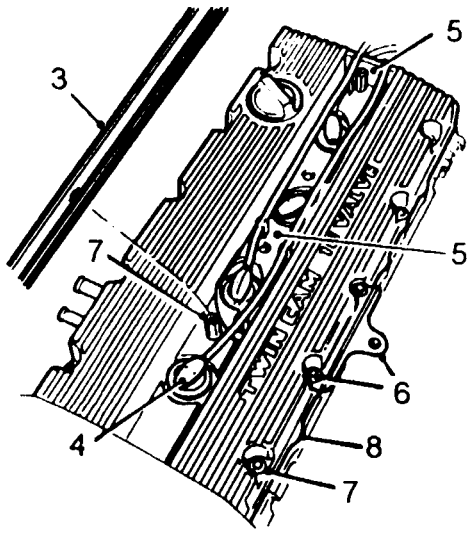

M124931

3. Release 2 screws and remove spark plug cover.
4. Disconnect 4 plug tubes from spark plugs. Remove any debris from spark plug recesses, remove and discard 4 spark plugs.
5. Lift clip plate and grommet and position plug leads aside.
6. Remove 2 bolts and air cleaner support bracket.
7. Progressively slacken then remove bolts and on early engines, 2 pillar bolts securing camshaft cover.

NOTE: On later engines, pillar bolts have been replaced by 'cast-in' supports which are an integral part of the camshaft cover.

8. Remove camshaft cover assembly, remove and discard gasket.
9. Check and record crankshaft end-float.

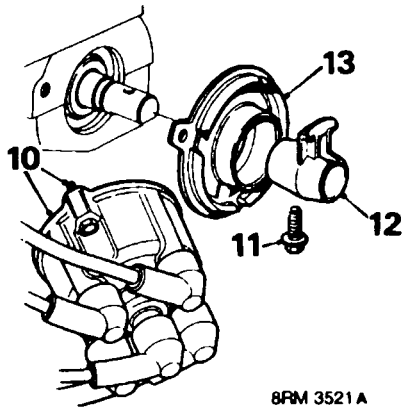

10. Release 2 screws and remove distributor cap.
11. Remove and discard screw securing rotor arm.
12. Remove rotor arm.
13. Remove anti-flash shield.

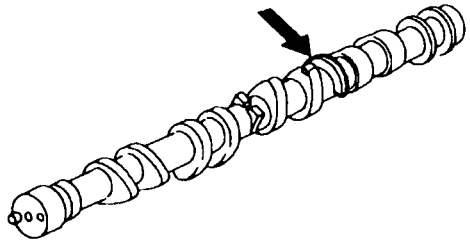

M124973

NOTE: Later engines are fitted with modified camshafts which incorporate a reluctor ring and the procedure for removing cylinder head bolts differs from early engines. Commencing engine numbers for the modified camshafts are listed in information.

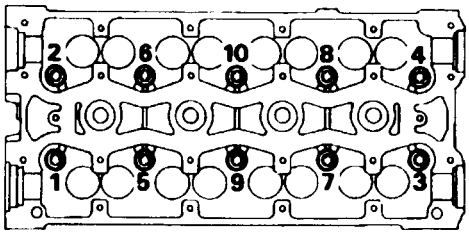

8RM 0740

14. Using sequence shown, progressively slacken cylinder head bolts:
Early engines:- bolts 1 to 8, remove bolts 1 to 8 and store in fitted order.
Later engines fitted with modified camshafts:- bolts 1 to 6, remove bolts 1 to 6 and store in fitted order.

NOTE: It will be necessary to carry out the following operations in order to remove the remaining bolts.

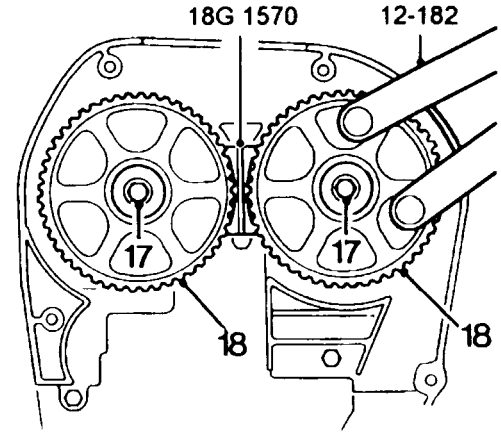

12M0576B

15. Remove locking tool **18G 1570** from camshaft gears.
16. Using tool **12-182,** turn both camshafts clockwise to gain access to bolts:
Early engines:- bolts 9 and 10.
Later engines fitted with modified camshafts:- bolts 7 and 8.
Progressively slacken then remove the remaining bolts and store in fitted order.

CAUTION: Removal of cylinder head bolts results in a 'tightening-up' of crankshaft; rotation of crankshaft must, therefore, be kept to a minimum. Do not rotate crankshaft until cylinder liner retainer clamps 18G 1736 are fitted.

17. Suitably identify each camshaft gear to its respective camshaft and using tool **12-182** to hold camshaft gear against rotation, remove bolt and plain washer from each camshaft gear.
18. Remove camshaft gears.

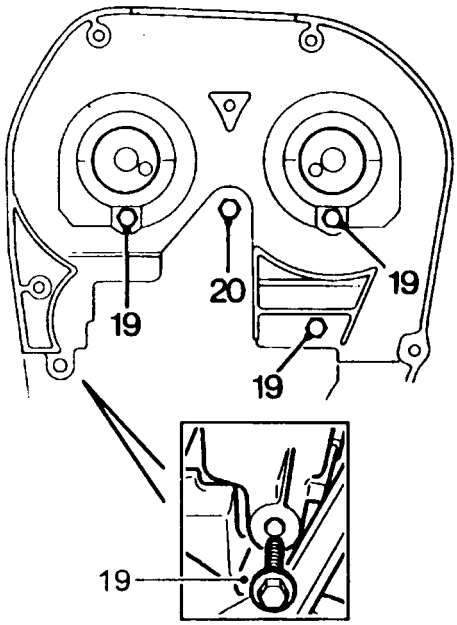

12M0577A

19. Remove screws securing upper part of timing belt rear cover to cylinder head and screw securing rear of cover to coolant pump.

NOTE: This is the longest of the rear cover securing screws.

20. Remove timing belt tensioner pillar bolt.
21. Using assistance, remove cylinder head assembly from cylinder block.

CAUTION: Cylinder head is dowel located, do not tap it sideways to free it from cylinder block. Place cylinder head assembly on blocks of wood to prevent damaging valves.

22. Remove and discard cylinder head gasket.

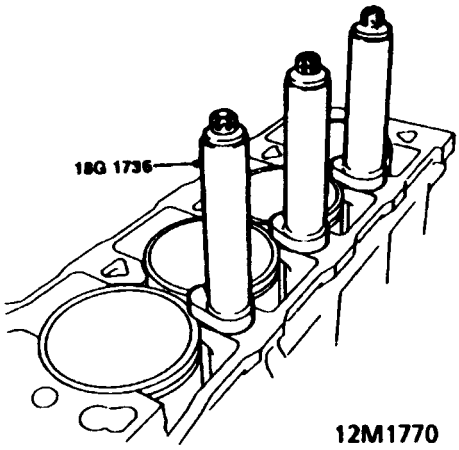

12M1770

23. Assemble cylinder liner retainer clamps **18G 1736** to cylinder head bolts. Position retainer clamps on cylinder liners ensuring clamps do not protrude over liner bores. Screw cylinder head bolts into oil rail and tighten sufficiently to retain clamps.

CAUTION: Ensure that bolts used are those originally fitted in that location.

Cylinder head - K16 non VVC engines fitted with plug top coil ignition system - remove

NOTE: Commencing engine numbers for these engines are listed in Information

CAUTION: If crankshaft is to be removed during overhaul it will be necessary to check and record crankshaft end-float prior to removing cylinder head.

1. Remove and discard camshaft timing belt.

CAUTION: Do not rotate crankshaft whilst timing belt is removed and cylinder head is fitted, pistons will contact the valves.

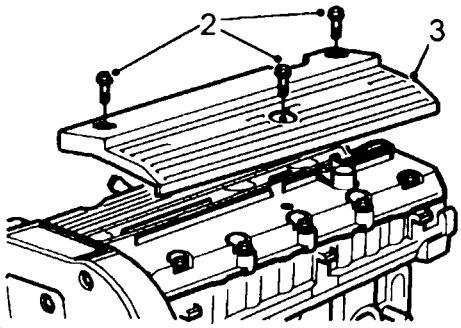

M124959

2. Noting that shortest screw is fitted in centre of spark plug cover, remove 3 screws securing cover to camshaft cover.
3. Remove spark plug cover.

If fitted

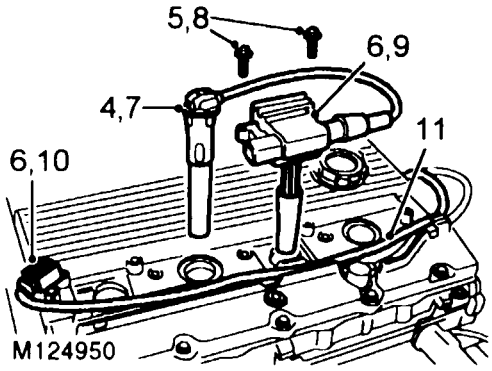

M124950

4. Disconnect ht lead and plug tube from No. 4 spark plug.
5. Remove 2 bolts securing front coil to camshaft cover.
6. Carefully raise coil until plug tube is disconnected from No. 1 spark plug, disconnect multiplug from coil.
7. Disconnect ht lead and plug tube from No. 2 spark plug.
8. Remove 2 bolts securing rear coil to camshaft cover.
9. Carefully raise coil until plug tube is disconnected from No. 3 spark plug.
10. Disconnect multiplug from coil.
11. Release harness from clips.

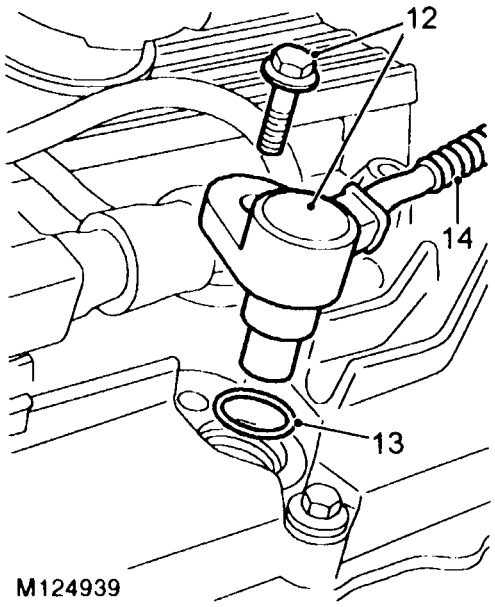

12. Remove bolt securing camshaft sensor to camshaft cover, withdraw sensor.
13. Remove and discard 'O' ring.
14. Release harness from clip.
15. Position harness aside.

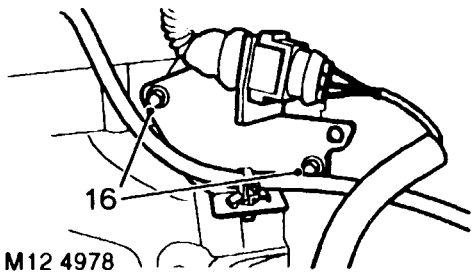

16. Remove 2 bolts securing multiplug bracket to camshaft carrier, remove bracket.

All cylinder heads

17. Remove any debris from spark plug recesses, remove 4 spark plugs.

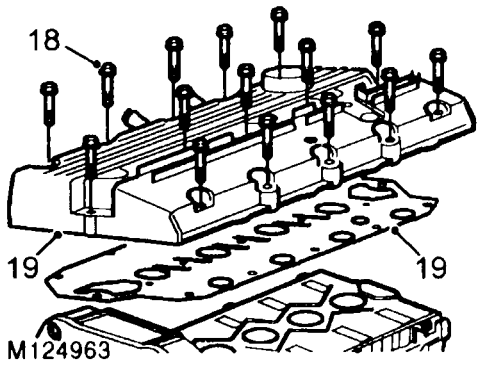

18. Progressively slacken then remove 15 bolts securing camshaft cover.
19. Remove camshaft cover, remove and discard gasket.
20. Check and record crankshaft end-float.

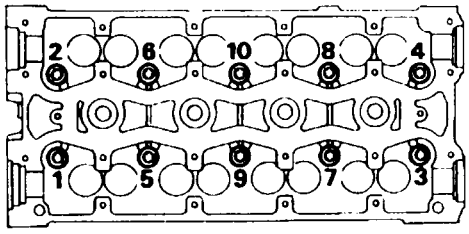

21. Using sequence shown, progressively slacken cylinder head bolts 1 to 6.

NOTE: It will be necessary to carry out the following operations in order to remove the remaining bolts.

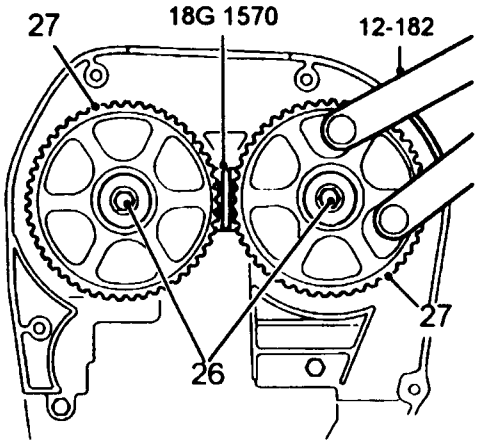

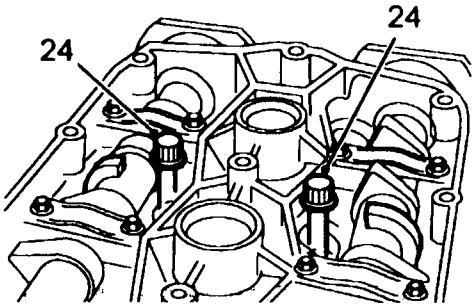

M12 4964A

22. Remove camshaft locking tool **18G 1570.**
23. Using tool **12-182,** rotate inlet and exhaust camshafts clockwise until reluctor rings clear bolt heads 7 and 8.
24. Progressively slacken cylinder head bolts 7 to 10.
25. Remove 10 cylinder head bolts and store in fitted order.

CAUTION: Removal of cylinder head bolts results in a 'tightening-up' of crankshaft; rotation of crankshaft must, therefore, be kept to a minimum. Do not rotate crankshaft until cylinder liner retainer clamps 18G 1736 are fitted.

26. Suitably identify each camshaft gear to its respective camshaft and using tool **12-182** to hold camshaft gear against rotation, remove bolt and plain washer from each camshaft gear.
27. Remove camshaft gears.

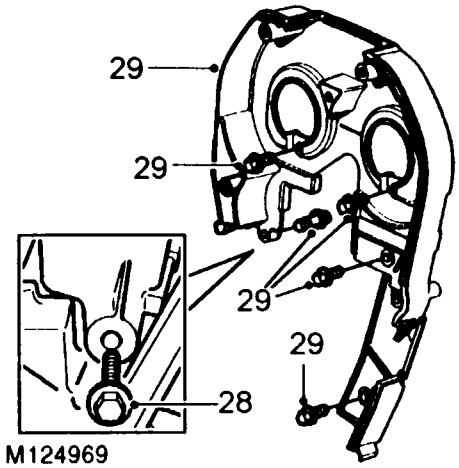

M124969

NOTE: Timing belt rear cover fitted to engine with 5 bolt front engine mounting illustrated.

28. Remove screw securing rear of timing belt rear cover to coolant pump.

NOTE: This is the longest of the rear cover securing screws.

29. Remove screws securing timing belt rear cover, remove cover.
30. Remove timing belt tensioner pillar bolt.
31. Using assistance, remove cylinder head assembly from cylinder block.

CAUTION: Cylinder head is dowel located, do not tap it sideways to free it from cylinder block. Place cylinder head assembly on blocks of wood to prevent damaging valves.

32. Remove and discard cylinder head gasket.

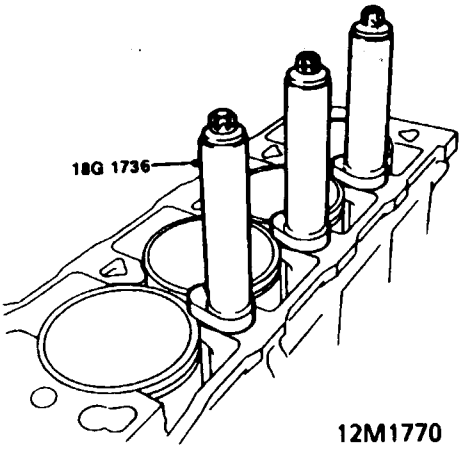

33. Assemble cylinder liner retainer clamps **18G 1736** to cylinder head bolts. Position retainer clamps on cylinder liners ensuring clamps do not protrude over liner bores. Screw cylinder head bolts into oil rail and tighten sufficiently to retain clamps.

⚠ **CAUTION: Ensure that bolts used are those originally fitted in that location.**

Cylinder head - K16 VVC engines - remove

⚠ **CAUTION: If crankshaft is to be removed during overhaul it will be necessary to check and record crankshaft end-float prior to removing cylinder head.**

1. Remove and discard camshaft timing belt.

⚠ **CAUTION: Do not rotate crankshaft whilst timing belt is removed and cylinder head is fitted, pistons will contact the valves.**

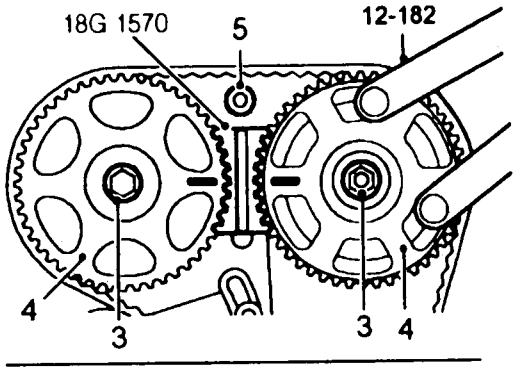

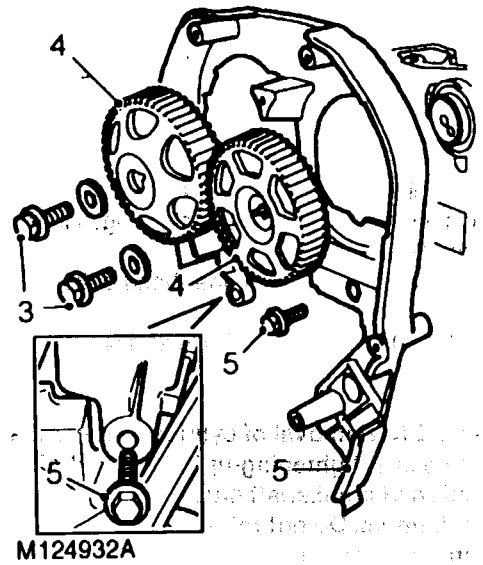

2. Ensure that tool **18G 1570** is fitted to camshaft gears.
3. Suitably identify each camshaft gear to its respective camshaft and using tool **12-182** to restrain camshaft gears against rotation, remove bolt and plain washer securing each camshaft gear.
4. Remove tool **18G 1570**, remove camshaft gears.

5. Remove screws securing timing belt upper rear cover to cylinder head and rear of cover to coolant pump; remove cover.

NOTE: This is the longest of the rear cover securing screws.

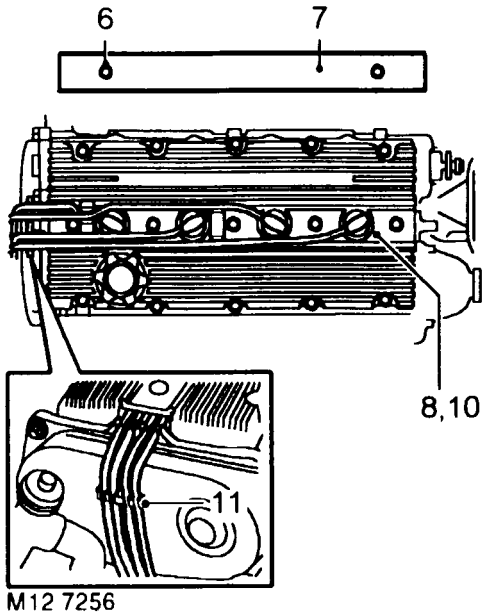

M12 7256

NOTE: Camshaft cover fitted to early engines illustrated.

6. Remove 2 screws securing spark plug cover.
7. Remove spark plug cover.
8. Disconnect 4 plug tubes from spark plugs.
9. Remove any debris from spark plug recesses.
10. Remove and discard 4 spark plugs.
11. Release HT leads from camshaft rear belt cover.

Later engines

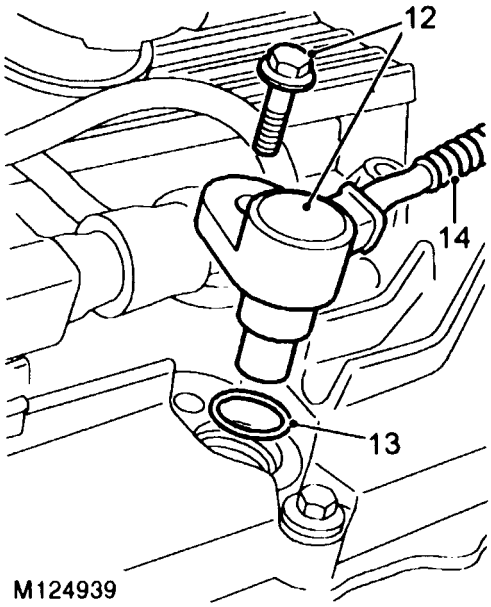

M124939

12. Remove bolt securing camshaft sensor, remove sensor.
13. Remove and discard 'O' ring.
14. Release harness from clip.

All engines

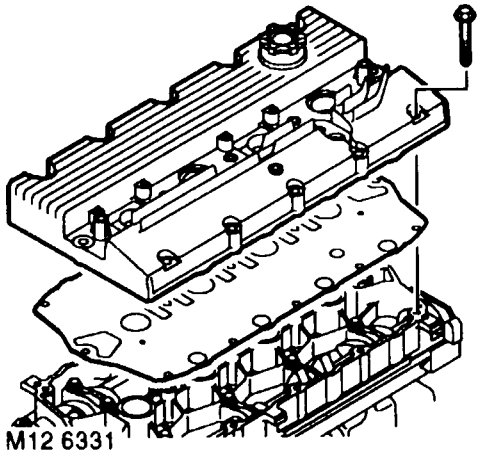

NOTE: Camshaft cover fitted to early engines illustrated.

15. Progressively slacken, then remove 15 bolts securing camshaft cover.
16. Remove camshaft cover, remove and discard gasket.
17. Check and record crankshaft end-float.

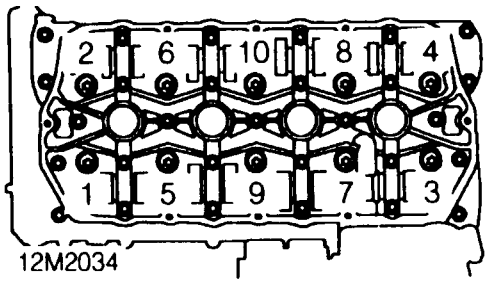

18. Using sequence shown, progressively slacken then remove 10 cylinder head to oil rail bolts.
19. Remove bolts and store in fitted order.

CAUTION: Removal of cylinder head bolts results in a 'tightening-up' of crankshaft; rotation of crankshaft must, therefore, be kept to a minimum. Do not rotate crankshaft until cylinder liner retainer clamps 18G 1736 are fitted.

20. Using assistance, remove cylinder head assembly.

CAUTION: Cylinder head is dowel located do not tap it sideways to free it from cylinder block. Place cylinder head on blocks of wood to prevent damaging valves.

21. Remove and discard cylinder head gasket.

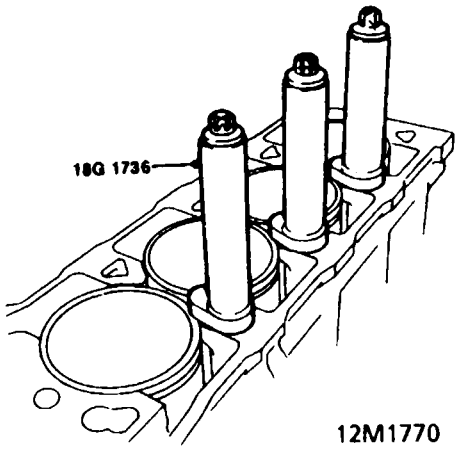

22. Assemble cylinder retainer clamps **18G 1736** to cylinder head bolts. Position retainer clamps on cylinder liners ensuring that clamps do not protrude over liner bores. Screw cylinder head bolts into oil rail and tighten sufficiently to retain clamps.

CAUTION: Ensure that bolts used are those originally fitted in that location.

Camshafts - K8 and all K16 Non VVC engines - check end-float

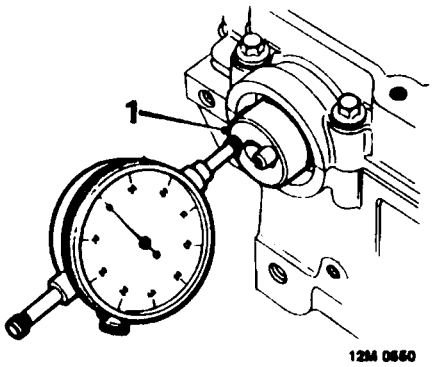

1. Check end-float of each camshaft using a DTI.
   Camshaft end-float = 0.06 to 0.19 mm
   Service limit = 0.3 mm
2. Renew components as necessary to achieve correct end-float.

Camshafts - K16 VVC engines - check end-float

Inlet camshafts

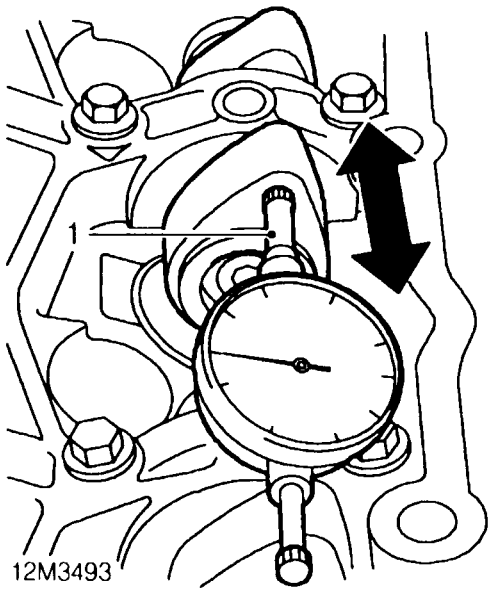

1. Assemble a suitable DTI to camshaft carrier with stylus of gauge contacting face of front camshaft number 4 cam.
2. Move camshaft fully rearwards and zero gauge.
3. Move camshaft fully forwards and note end-float reading on gauge:
   Inlet camshaft end-float = 0.03 to 0.15 mm
   Service limit = 0.25 mm
4. Repeat above procedure for rear camshaft with stylus of gauge contacting face of number 5 cam.
5. Renew camshaft/VVC assemblies as necessary to achieve correct end-float.

Exhaust camshaft

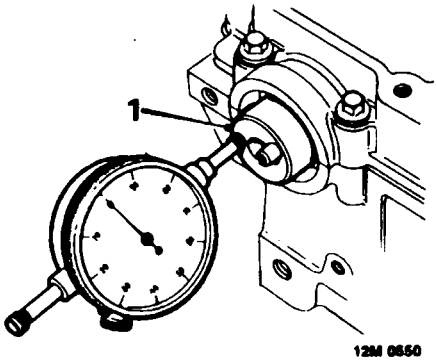

6. Check camshaft end-float using a DTI.
   Exhaust camshaft end-float = 0.06 to 0.19 mm
   Service limit = 0.3 mm

7. Renew components as necessary to achieve correct end-float.

Camshaft carrier and camshafts - K8 and all K16 Non VVC engines - remove

K8

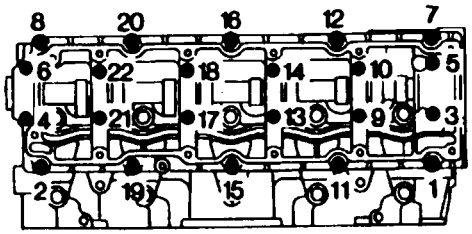

12M0578

1. Using sequence shown, progressively slacken 22 bolts securing camshaft carrier to cylinder head until valve spring pressure is released; remove bolts.

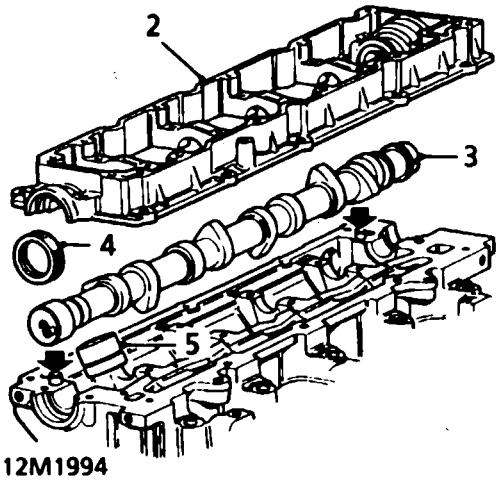

12M1994

2. Remove camshaft carrier.

NOTE: Dowel located.

3. Remove camshaft.
4. Remove and discard camshaft oil seals.
5. Using a stick magnet, remove 8 tappets from cylinder head. Retain tappets in their fitted order and invert to prevent oil loss.

K16

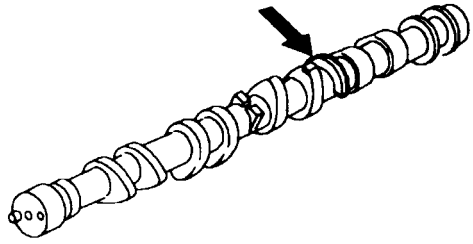

M124973

⚠ **CAUTION: Camshafts fitted to later engines incorporate a reluctor ring, these camshafts are not interchangeable with those fitted to early engines. Commencing engine numbers for the modified camshafts are listed in Information.**

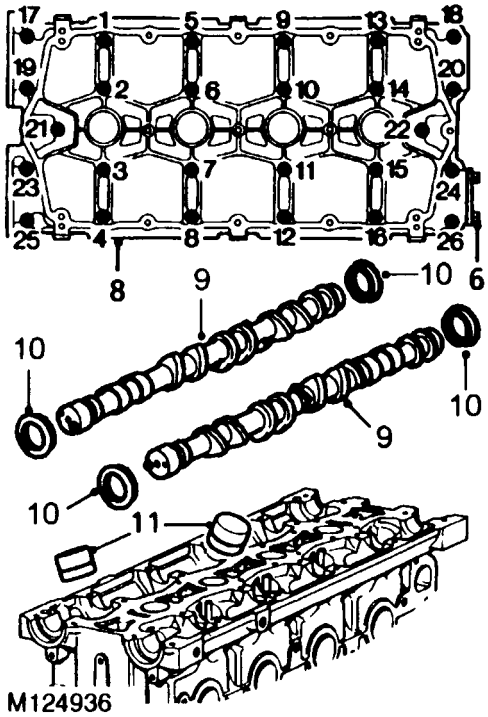

M124936

NOTE: Camshafts incorporating a reluctor ring illustrated.

6. Remove 2 bolts securing blanking plate to rear of camshaft carrier, remove plate.

NOTE: On engines fitted with plug coil ignition, blanking plates are fitted for both inlet and exhaust camshafts.

7. Using sequence shown, progressively slacken 26 bolts until valve spring pressure is released. Remove bolts.
8. Remove camshaft carrier.

NOTE: Dowel located.

9. Suitably identify each camshaft to its fitted position, remove camshafts.
10. Remove and discard oil seals from camshafts.
11. Using a stick magnet, remove 16 tappets from cylinder head. Retain tappets in fitted order and invert to prevent oil loss.

Camshaft carrier and camshafts - K16 VVC engines - remove

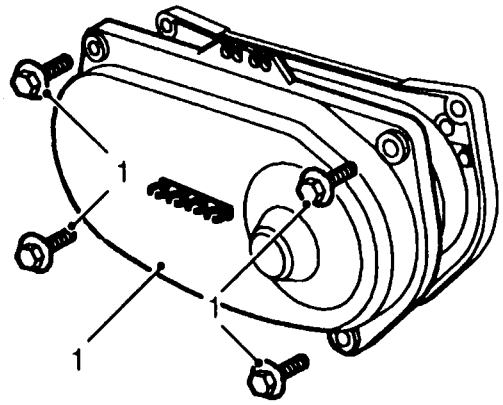

12M3481

1. Remove 4 bolts securing camshaft rear belt cover, remove cover.

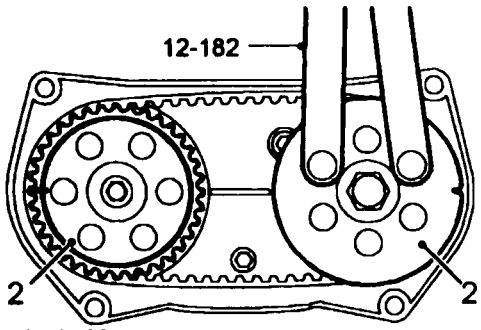

12M3482A

2. Using tool **12-182**, rotate inlet camshaft rear timing gear until timing marks on both rear gears are facing outwards.

NOTE: With timing marks in this position, the lobes of numbers 3, 4, 5 and 6 cams on the inlet camshafts should be facing upwards.

3. Suitably identify each rear camshaft gear to its respective camshaft.

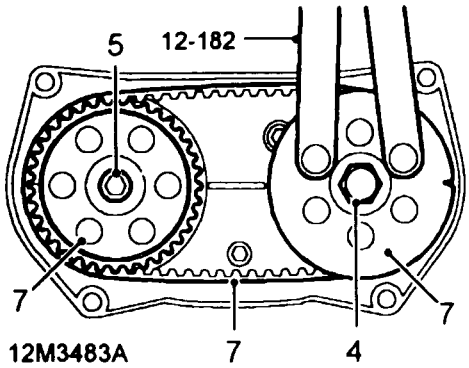

12M3483A

4. Using tool **12-182**, restrain rear inlet camshaft timing gear and remove bolt and washer retaining gear.
5. Repeat above procedure for exhaust camshaft rear timing gear.
6. Remove tool **12-182** from gear.
7. Remove both rear timing gears from camshafts, remove and discard rear timing belt.

CAUTION: Rear timing belt must always be replaced during engine overhaul. Do not rotate crankshaft with front timing belt removed and cylinder head fitted.

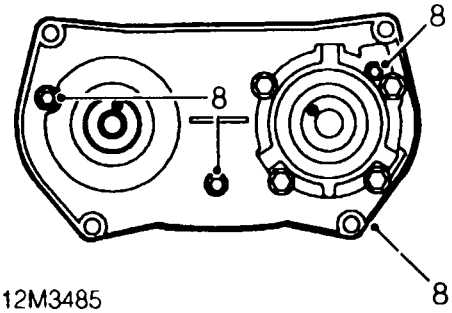

12M3485

8. Remove bolts securing camshaft rear timing belt backplate.
9. Remove rear timing belt backplate.

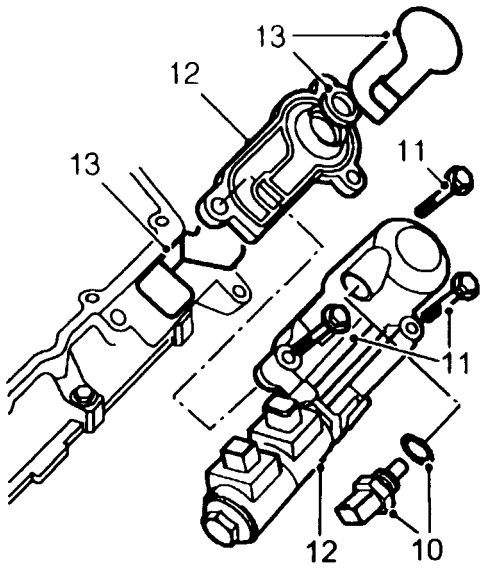

12M3486A

10. Remove oil temperature transmitter, from hydraulic control unit, remove and discard sealing washer.
11. Remove 3 bolts securing hydraulic control unit to camshaft carrier.
12. Withdraw hydraulic control unit, remove seal plate.
13. Remove and discard 2 labyrinth seals and rack seal from seal plate.

CAUTION: Take care not to damage labyrinth seal retaining lugs on seal plate.

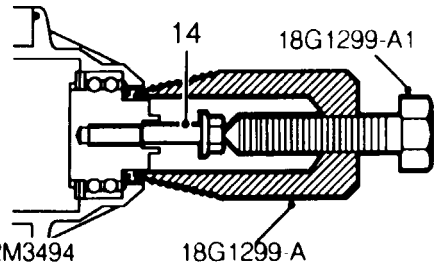

12M3494

14. Fit camshaft gear bolt to front VVC mechanism.
15. Screw tool **18G 1299A** and **18G 1299A-1** into oil seal.
16. Remove VVC housing oil seal by tightening centre bolt of tool, discard oil seal.
17. Remove camshaft gear bolt.
18. Repeat above procedures for rear VVC housing oil seal.

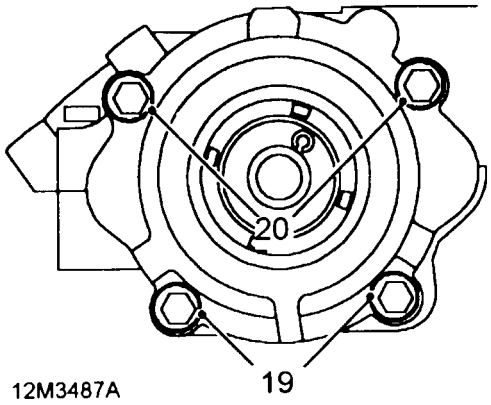

12M3487A

19. Remove and discard 2 bolts securing each VVC housing to cylinder head.
20. Slacken 2 bolts securing each VVC housing to camshaft carrier by 1 turn.

CAUTION: Do not exceed 1 turn.

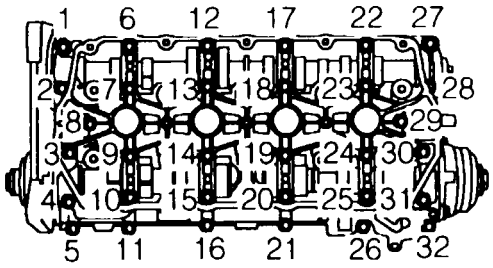

12M3488

21. Using sequence shown, progressively slacken and noting the position of 4 longest bolts, remove 32 bolts securing camshaft carrier to cylinder head.

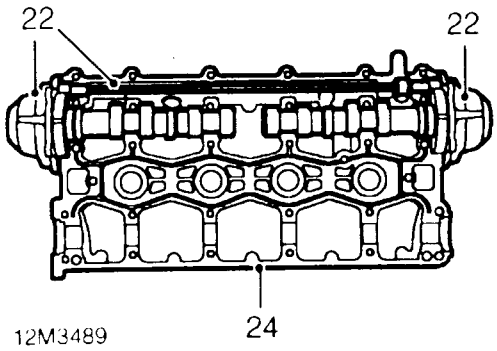

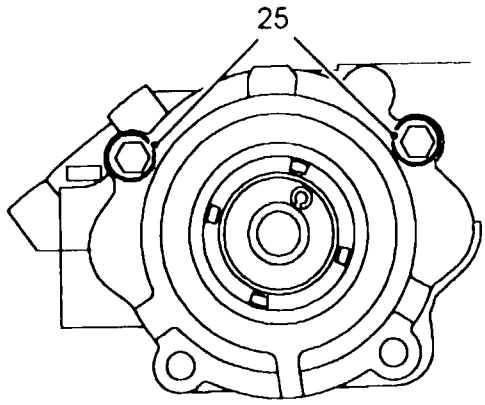

CAUTION: During the following operations, it is essential to ensure that front and rear inlet camshafts are retained in their respective VVC assemblies. If camshafts are removed from their VVC assemblies, then complete assembly must be replaced; it is not permissible to refit camshafts to VVC assemblies.

22. Ensuring that front and rear inlet camshafts are retained in camshaft carrier and VVC assemblies, carefully release camshaft carrier from cylinder head.

NOTE: Dowel located.

23. Lift camshaft carrier together with front and rear inlet camshafts off cylinder head.

CAUTION: Ensure that exhaust camshaft is retained in cylinder head as camshaft carrier is removed.

24. Ensuring that front and rear inlet camshafts are retained in camshaft carrier, invert carrier.

25. Slacken but do not remove 2 bolts securing each VVC housing to camshaft carrier.

NOTE: Bolts should only be slackened sufficiently to enable timing plates 18G 1770/1 and 18G 1770/2 to be fitted.

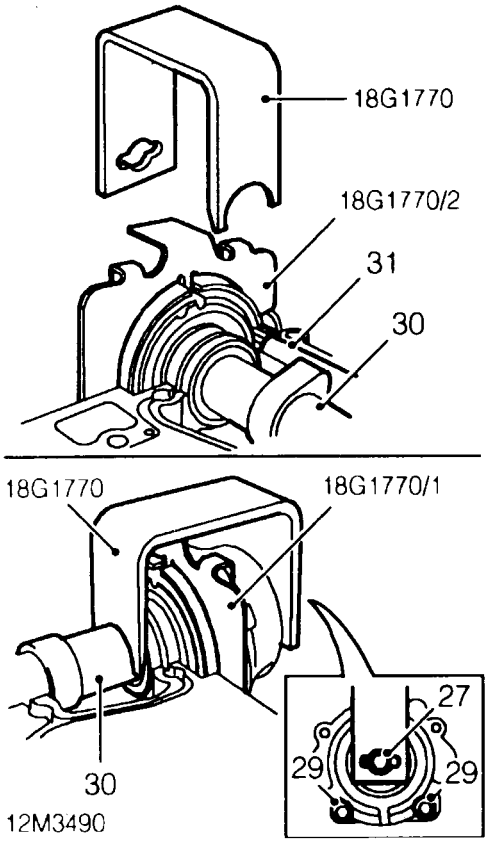

26. Fit timing plates **18G 1770/1** to front and **18G 1770/2** to rear VVC assemblies.
27. Assemble clamps **18G 1770** to front and rear inlet camshafts and VVC assemblies, fit camshaft gear bolts and washers to retain clamps.
28. Suitably identify each VVC assembly to its fitted position. Do not attempt to interchange front and rear assemblies.
29. Remove and discard 2 bolts securing each VVC housing to camshaft carrier.
30. Remove front and rear camshafts together with VVC assemblies.

⚠ **CAUTION: Do not remove clamps 18G 1770.**

31. Remove control shaft from camshaft carrier.

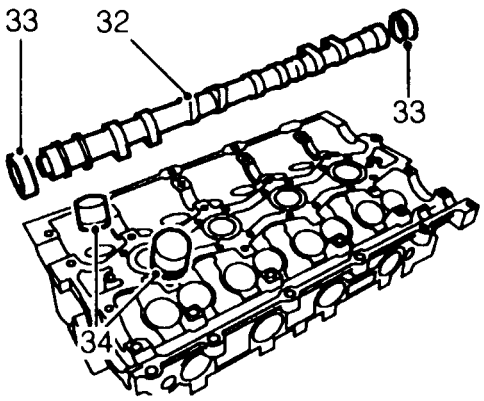

12M3521

32. Remove exhaust camshaft from cylinder head.

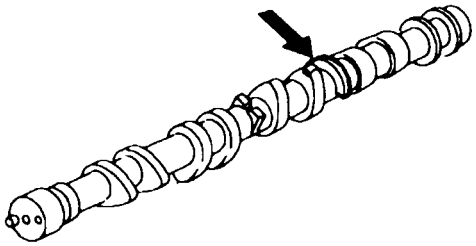

M124973

⚠ **CAUTION: In order to commonise exhaust camshafts between VVC and non VVC engines, modified exhaust camshafts incorporating a reluctor ring are fitted to later engines, these camshafts are not interchangeable with those fitted to early engines. Commencing engine numbers for the modified camshafts are listed in Information.**

33. Remove and discard exhaust camshaft oil seals.
34. Using a stick magnet, remove 16 tappets from cylinder head. Retain tappets in their fitted order and invert to prevent oil loss.

Tappets - inspection

1. Check tappets for signs of wear, scoring and overheating.
2. Measure outside diameter of tappet, measurement must be taken half-way along tappet body.
   Tappet outside dia. = 32.959 to 32.975 mm.
3. Ensure oil hole in each tappet is clear.

NOTE: Retain tappets in their fitted order and keep them inverted to prevent oil loss.

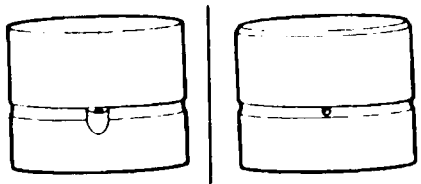

A B

12M1771A

Non VVC engines

CAUTION: A modified tappet has been introduced and will be supplied as a replacement for all non VVC engines. The above illustration show the early tappet A and modified tappet B. When the modified tappets are already fitted to an engine, they may be replaced on an individual basis but may only be fitted as replacements for early tappets in cylinder sets.

VVC engines

CAUTION: Tappets fitted to VVC engines are lighter than those fitted to non VVC engines and whilst similar in appearance to the early tappets A illustrated above, it is essential that early tappets are not fitted to VVC engines. To ensure that correct replacement tappet is fitted, measure overall length of tappet:

Early tappet - Non VVC engines = 26.0 mm
Later tappet - VVC engines = 24.5 mm

Camshafts and timing gears - K8 and all K16 Non VVC engines - inspection

Camshafts

NOTE: Carry out camshaft inspection after removal of valves.

1. Clean camshaft(s), camshaft carrier and cylinder head bearing surfaces, use suitable solvent to remove sealant.
2. Inspect cams and bearing journals for wear, pitting and scoring; replace components as necessary.

Checking camshaft bearing clearance - Non VVC engines

K8

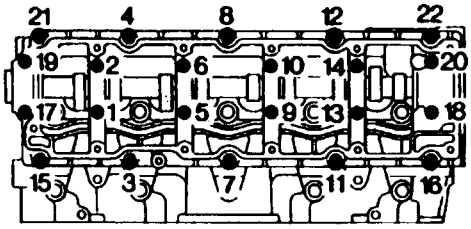

12M0563

K16

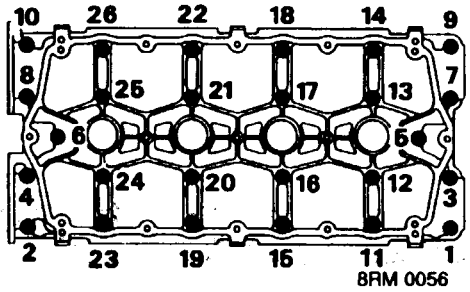

3. Position camshaft(s) in cylinder head and place Plastigage across each journal.
4. Fit camshaft carrier and tighten bolts in sequence shown to 10 Nm. Do not rotate camshaft(s).
5. Progressively slacken bolts and then remove camshaft carrier.

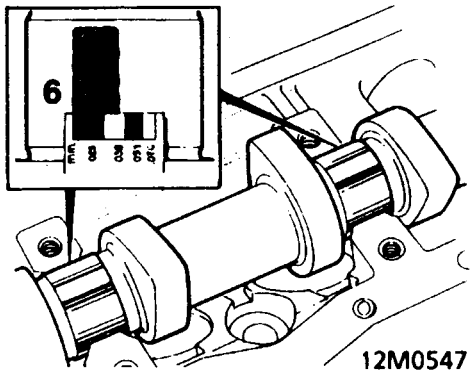

6. Measure widest portion of Plastigage on each journal:
   Camshaft bearing clearance = 0.060 to 0.094 mm
   Service limit = 0.15 mm
   If clearance is excessive, fit new camshaft(s) and repeat check. If clearances are still excessive, replace cylinder head and camshaft carrier assembly.

CAUTION: If replacement camshafts are to be fitted, ensure they are correct for engine being worked on.

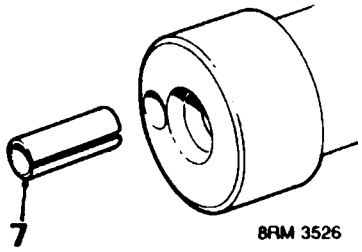

7. Remove drive pin from old camshaft and fit to new with its split towards centre of camshaft.
8. Remove all traces of Plastigage using an oily rag.

Timing gears - Non VVC engines

1. Clean timing gears, check gear teeth for damage and drive pin slot for wear, replace gears as necessary.

CAUTION: If gears have been subjected to prolonged exposure to oil contamination, they must be soaked in a solvent bath and then thoroughly washed in clean solvent.

Camshafts and timing gears - K16 VVC engines - inspection

Camshafts

NOTE: Carry out camshaft inspection after removal of valves.

1. Clean camshaft carrier and cylinder head bearing surfaces, use suitable solvent to remove sealant.

CAUTION: Do not remove clamps 18G 1770 whilst cleaning or inspecting inlet camshafts.

2. Inspect cams and bearing journals for wear, pitting and scoring, replace components as necessary.

NOTE: Inlet camshafts and VVC mechanisms will only be supplied as an assembly.

Checking camshaft bearing clearance - VVC engines

1. Position exhaust camshaft in cylinder head and place a strip of Plastigage across each camshaft journal.

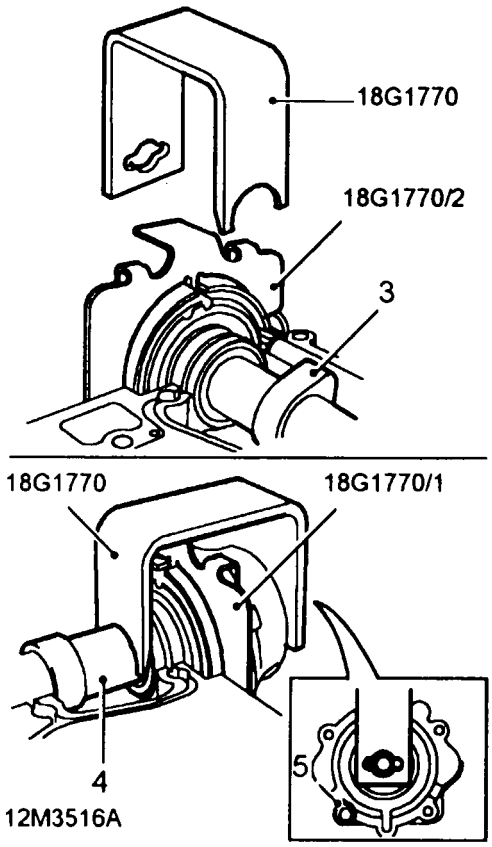

2. Rotate front and rear VVC control sleeves until timing plates **18G 1770/1** - front and **18G 1770/2** - rear can be inserted through the housing and into the control sleeve slot.

CAUTION: Do not remove clamps at this stage, reposition clamps as necessary to enable timing plates to be fitted.

3. Place a strip of Plastigage across each inlet camshaft journal on camshaft carrier and position front inlet camshaft and VVC housing in camshaft carrier.
4. Position rear inlet camshaft and VVC housing in camshaft carrier.
5. Fit and lightly tighten a slave M6 bolt to retain front and rear VVC housings to camshaft carrier.
6. Remove clamps **18G 1770.**

CAUTION: During the following operations it is essential to ensure that front and rear inlet camshafts are retained in their respective VVC assemblies and the camshaft carrier.

7. Invert camshaft carrier and fit to cylinder head.

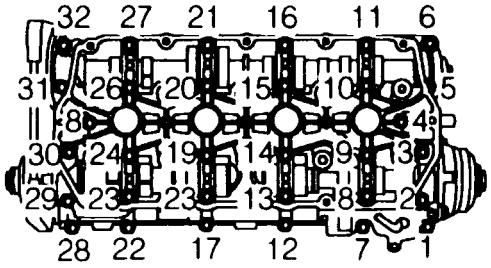

12M3503

8. Fit 32 bolts noting that 4 longest bolts are fitted at each end of camshaft carrier.
9. Using sequence shown, progressively tighten bolts 10 Nm.

CAUTION: Do not rotate camshafts.

10. Progressively slacken then remove 32 bolts securing camshaft carrier to cylinder head.
11. Carefully release camshaft carrier from cylinder head.
12. Lift camshaft carrier together with front and rear inlet camshafts off cylinder head.

CAUTION: Ensure that exhaust camshaft is retained in cylinder head.

13. Invert camshaft carrier.

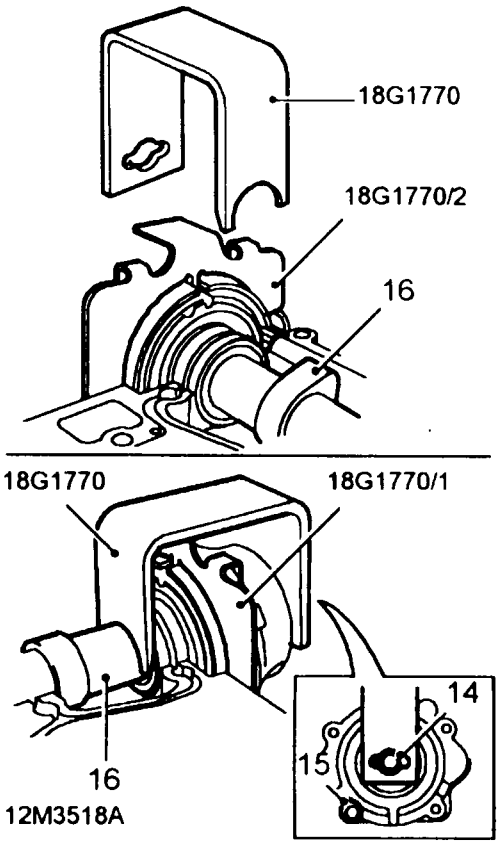

14. Assemble clamps **18G 1770** to front and rear inlet camshafts and VVC assemblies, fit camshaft gear bolts and washers to retain clamps.
15. Remove slave bolts securing VVC housings to camshaft carrier.
16. Remove front and rear inlet camshafts and VVC housings from camshaft carrier.

CAUTION: If new VVC housing gaskets have been fitted do not remove timing plates 18G 1770/1 and 18G 1770/2.

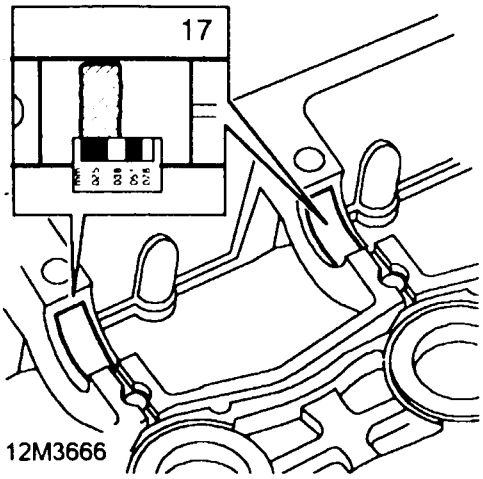

17. Measure widest portion of Plastigage on each inlet camshaft journal on camshaft carrier:
Inlet camshaft bearing journal clearances:
25 mm diameter journals = 0.025 to 0.060 mm
Service limit = 0.1 mm
40 mm diameter journals = 0.030 to 0.070 mm
Service limit = 0.1 mm

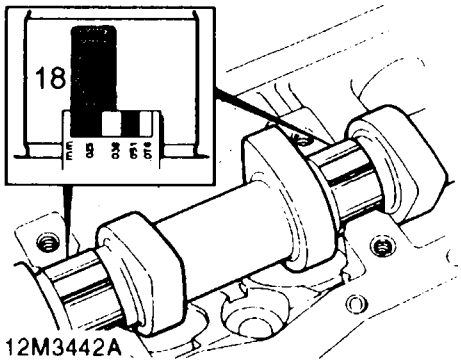

18. Measure widest portion of Plastigage on each exhaust camshaft journal:
Exhaust camshaft bearing clearance = 0.060 to 0.094 mm
Service limit = 0.15 mm
19. If bearing clearances on any camshaft are excessive, fit new exhaust camshaft or inlet camshafts and VVC assemblies and repeat check. If clearances are still excessive, replace cylinder head and camshaft carrier assembly.

CAUTION: If replacement exhaust camshaft is to be fitted, ensure it is correct for engine being worked on.

NOTE: Inlet camshafts are only supplied with VVC mechanisms as an assembly.

20. Remove exhaust camshaft from cylinder head.
21. Remove all traces of Plastigage using an oily rag.

Timing gears - VVC engines

CAUTION: If gears have been subjected to prolonged exposure to oil contamination, they must be soaked in a solvent bath and then thoroughly washed in clean solvent.

Ensure reference marks are not erased.

1. Clean timing gears, check gear teeth for damage and drive pin slot for wear, replace gears as necessary.

Valves and springs - remove

1. Support cylinder head clear of valves; use hollow drift and tap each spring cap to free collets.
2. Position cylinder head on its exhaust manifold face.

NOTE: K16 engine: Remove inlet valves with cylinder head in this position.

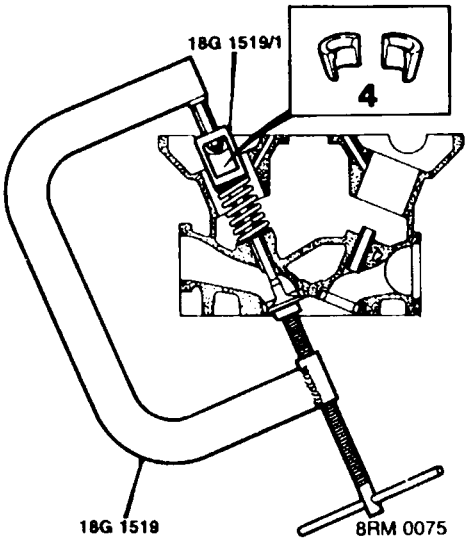

NOTE: K16 Non VVC cylinder head illustrated.

3. Using tool **18G 1519** and adapter **18G 1519/1**, compress valve spring.
4. Remove 2 collets from valve stem using a magnet.
5. Remove tool **18G 1519.**

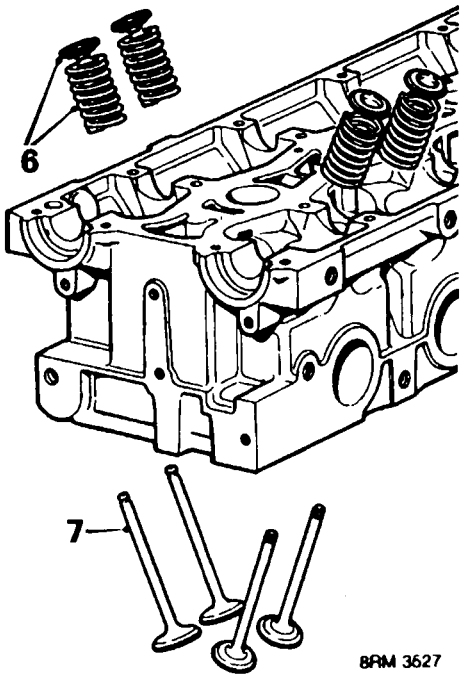

NOTE: K16 Non VVC cylinder head illustrated.

6. Remove spring cap and valve spring.
7. Remove valve.

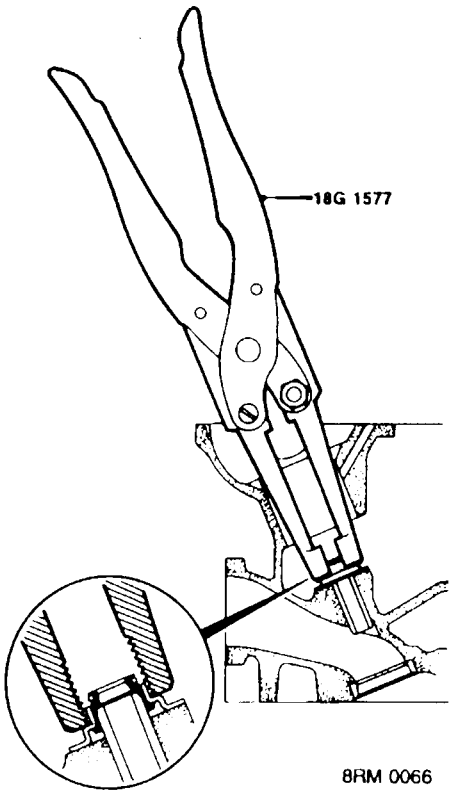

8. Using **18G 1577**, remove and discard valve stem seal.
9. *K8:* Repeat above operations to remove all remaining valves.
   K16: Repeat above operations to remove remaining inlet valves.

CAUTION: Retain valves and springs in fitted order.

K16

10. Position cylinder head on its inlet manifold face.
11. Repeat above operations to remove exhaust valves and valve stem seals.

CAUTION: Retain valves and springs in fitted order.

Cylinder head - cleaning

1. Clean sealing surfaces on cylinder head and camshaft carrier.
   Use foam action gasket remover and a plastic scraper - DO NOT USE A METAL SCRAPER ON SEALING SURFACES.
   Clean inlet and exhaust manifold joint faces.
2. De-carbonise combustion areas of cylinder head and valves as necessary.
3. Blow out oilways and waterways, ensure oil feed to camshaft carrier is clear.

NOTE: Cylinder heads fitted to later engines have a 4.5 mm diameter oil drain hole drilled through the head from the camshaft oil seal recess; ensure drilling is clear.

4. *K8 engine:* Check fuel pump blanking plate - if fitted for signs of oil leakage. Replace gasket if necessary, tighten blanking plate nuts to 25 Nm.

Cylinder head - inspection

1. Check cylinder head for damage, pay particular attention to gasket face of cylinder head.

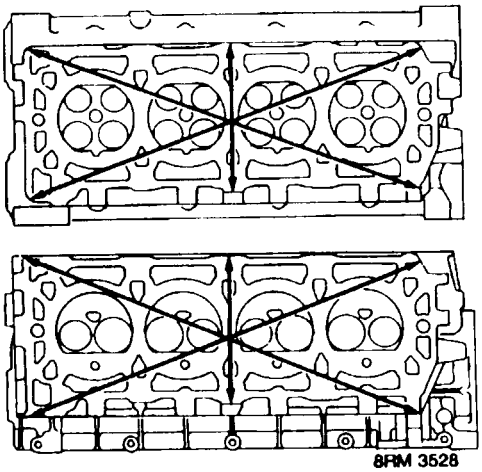

2. Check cylinder head face for warping, across centre and from corner to corner:
   Cylinder head:
   Maximum warp = 0.05 mm
3. Check cylinder head height:
   New = 118.95 to 119.05 mm.

   Cylinder heads may be refaced:
   Reface limit = 0.20 mm

CAUTION: Cylinder heads fitted to K16 engines with automatic timing belt tensioners are not interchangeable with those fitted to engines with manual tensioners.

Valve springs - inspection

1. Check condition of valve springs:

NOTE: Valve springs are either colour coded or plain:

K8 - Yellow/red
K16 - Non VVC engines - Plain
K16 - VVC engines - Blue

K8

Free length = 46.2 mm
Fitted length = 37.0 mm
Load - valve closed = 255 ± 12 N
Load - valve open = 535 ± 20 N

K16 - Non VVC engines

Free length = 50.0 mm
Fitted length = 37.0 mm
Load - valve closed = 250 ± 12 N
Load - valve open = 450 ± 18 N

K16 - VVC engines

Free length = 47.6 mm
Fitted length = 37.0 mm
Load - valve closed = 210 ± 13 N
Load - valve open = 440 ± 22 N

Valves and guides - inspection

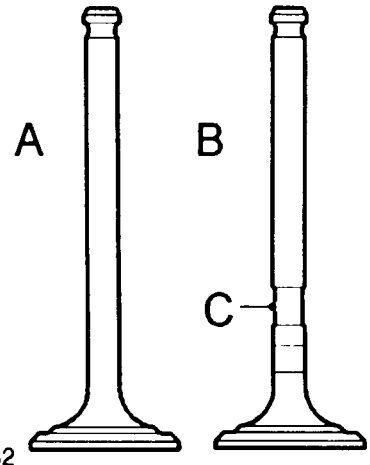

12M 3662

NOTE: Two types of exhaust valve may be fitted, standard valves, A in illustration or carbon break valves, B in illustration. Carbon break valves may be identified by the machined profile C on the valve stem. To prevent exhaust valves from sticking, standard valves should be replaced with carbon break valves during engine overhaul.

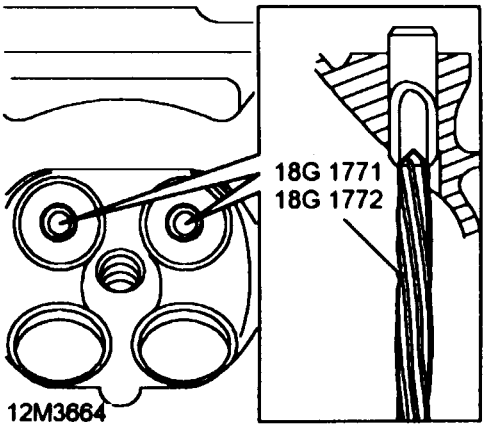

12M3664

1. Remove carbon deposits from exhaust valve guides using tool:
   K8 - **18G 1772**
   K16 - **18G 1771**

CAUTION: Tool must be inserted into valve guide from combustion face side of cylinder head.

2. Remove carbon from inlet valve guides, inlet and exhaust valves and valve seat inserts. Remove all loose particles of carbon on completion.

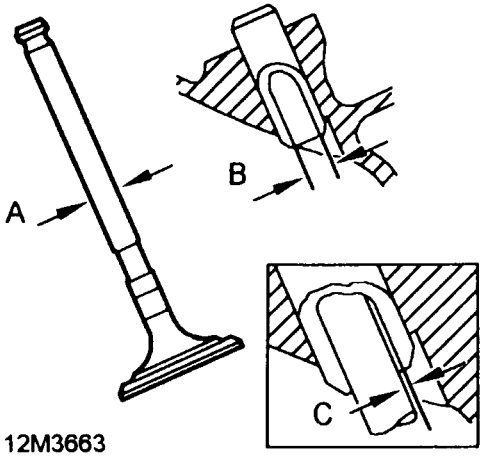

12M3663

3. Check existing valve stem diameters **A**, replace any valve if stem diameter is less than specified.
4. Check inlet and exhaust valve to guide clearances **C** using the following procedures:
5. Insert valve into its respective guide.
6. Extend valve head 10 mm out of valve guide and position suitable DTI gauge to rear of valve head.
7. Move valve towards front of cylinder head, pre-load gauge to valve head then zero gauge.
8. Move valve towards rear of cylinder head, record reading obtained to give valve stem to guide clearance **B**.
9. Repeat above procedures for each valve in turn.

K8

Valve stem diameter **A**:
Inlet = 6.960 to 6.975 mm
Exhaust = 6.952 to 6.967 mm
Valve guides:
Inside diameter **B**:= 7.000 to 7.025 mm
Valve stem to guide clearance **C**:
Inlet = 0.025 to 0.065 mm
Service limit = 0.07 mm
Exhaust = 0.033 to 0.073 mm
Service limit = 0.11 mm

K16

Valve stem diameter **A**:
Inlet = 5.952 to 5.967 mm
Exhaust = 5.947 to 5.962 mm
Valve guides:
Inside diameter **B**:= 6.000 to 6.025 mm
Valve stem to guide clearance **C**:
Inlet = 0.033 to 0.063 mm
Service limit = 0.07 mm
Exhaust = 0.038 to 0.078 mm
Service limit = 0.11 mm

10. Renew valves and guides as necessary.

Valve guides - renew

1. Support cylinder head face down on wooden blocks.

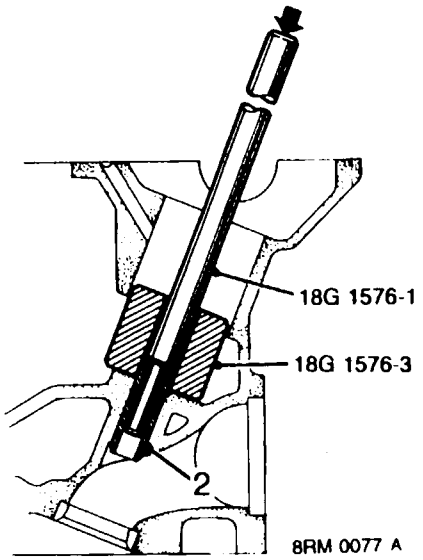

2. Position tool guide **18G 1576-3** in tappet bore and drift out valve guide using tool drift **18G 1576-1.**

NOTE: Retain valve guides in their fitted order.

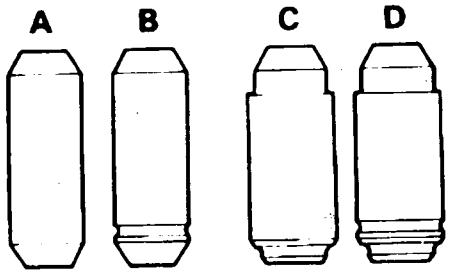

12M0007

3. Identify type of valve guide fitted:-
A - Standard production
C - Production oversize

NOTE: Two replacement sizes of valve guide are available, sizes B and D, replace original guide A with B and original guide C with D.

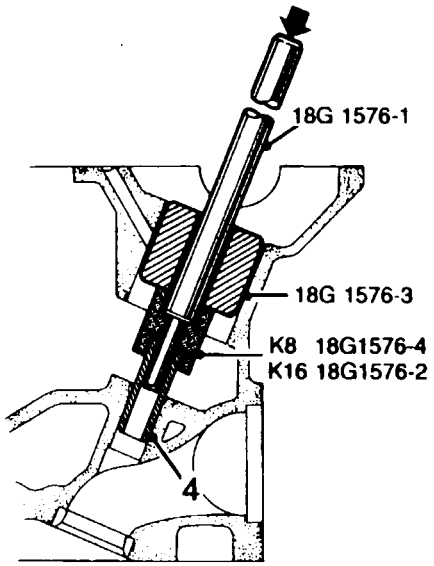

8RM 0076 A

NOTE: Cylinder head and valve guides must be at room temperature when fitting guides.

4. Locate valve guide in valve guide bore with identification groove(s) towards valve seat; position depth gauge:-
   K8 - Use depth gauge **18G 1576-4.**
   K16 - Use depth gauge **18G 1576-2.**
5. Position nylon guide **18G 1576-3** in cylinder head, press guide into bore using driver **18G 1576-1** until depth gauge contacts top of valve guide bore.

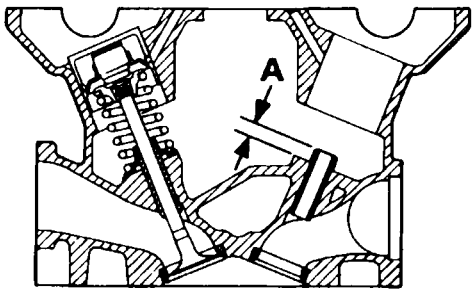

8RM 0052

6. Check fitted height **A** of valve guide:-
   K8 = 10.3 mm
   K16 = 6.0 mm

Valve seat inserts - renew

CAUTION: Triple angle valve seat inserts have been introduced on later K16 engines; these inserts are not interchangeable with those fitted to early engines. Commencing engine numbers for engines fitted with the new inserts are listed in Information.

1. Renew valve seat inserts as necessary.

CAUTION: Do not damage counterbore when removing insert.

2. Cool replacement valve seat inserts using liquid nitrogen and press into cylinder head in one continuous operation.

CAUTION: Do not heat cylinder head.

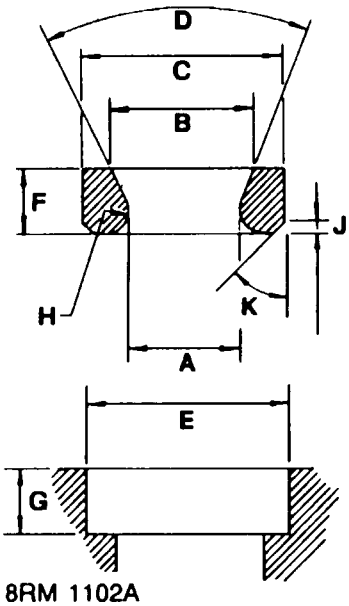

8RM 1102A

K8 - See illustration 8RM 1102A

Inlet
A:= 29.42 to 29.57 mm
B:= 31.61 to 31.91 mm
C:= 35.594 to 35.614 mm
D:= 35°
E:= 35.500 to 35.525 mm
F:= 5.45 to 5.50 mm
G:= 5.95 to 6.05 mm
H:= 2.0 mm radius
J:= 0.75 to 1.25 mm
K:= 45° **Exhaust**
A:= 26.92 to 27.07 mm
B:= 28.73 to 29.03 mm
C:= 33.06 to 33.08 mm
D:= 26°
E:= 33.000 to 33.025 mm
F:= 5.45 to 5.50 mm
G:= 5.95 to 6.05 mm
H:= 2.0 mm radius
J:= 0.75 to 1.25 mm
K:= 45°

K16 - Non VVC engines - not triple angle valve seats - See illustration 8RM 1102A

Inlet
A:= 22.98 to 23.13 mm
B:= 25.73 to 25.98 mm
C:= 29.560 to 29.573 mm
D:= 38°
E:= 29.475 to 29.500 mm
F:= 5.95 to 6.00 mm
G:= 6.53 to 6.69 mm
H:= 2.0 mm radius
J:= 0.75 to 1.25 mm
K:= 45°

Exhaust
A:= 19.58 to 19.73 mm
B:= 21.60 to 21.90 mm
C:= 25.960 to 25.973 mm
D:= 30°
E:= 25.888 to 25.913 mm
F:= 5.45 to 5.50 mm
G:= 5.75 to 6.41 mm
H:= 2.0 mm radius
J:= 0.75 to 1.25 mm
K:= 45°

K16 - VVC engines - not triple angle valve seats - See illustration 8RM 1102A

Inlet
A:= 27.38 to 27.62 mm
B:= 29.40 to 29.80 mm
C:= 32.56 to 32.57 mm
D:= 18 to 20°
E:= 32.475 to 32.500 mm
F:= 5.95 to 6.00 mm
G:= 6.46 to 6.62 mm
H:= 7.00 mm radius
J:= 0.74 to 1.25 mm
K:= 44 to 46°

Exhaust
A:= 23.68 to 23.93 mm
B:= 24.80 to 25.20 mm
C:= 28.99 to 29.00 mm
D:= 11 to 13°
E:= 28.88 to 28.91 mm
F:= 5.45 to 5.50 mm
G:= 6.00 to 6.16 mm
H:= 6.0 mm radius
J:= 0.75 to 1.25 mm
K:= 44 to 46°

K16 - Non VVC engines fitted with triple angle valve seats - See illustration M12 5536

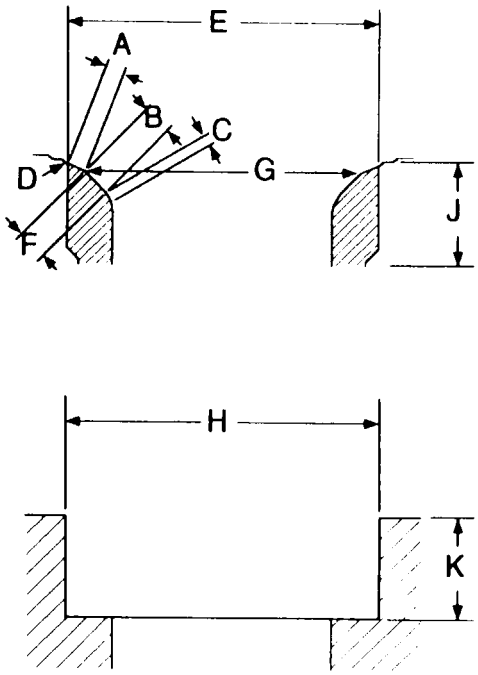

M12 5536

Inlet
A:= 15°
B:= 45°
C:= 60°
D:= 0.4 mm radius
E:= 29.560 to 29.573 mm
F:= 1.0 to 1.4 mm
G:= 26.43 mm
H:= 29.475 to 29.500 mm
J:= 5.95 to 6.00 mm
K:= 6.16 to 6.32 mm

Exhaust
A:= 15°
B:= 45°
C:= 60°
D:= 0.4 mm radius
E:= 25.960 to 25.973 mm
F:= 1.4 to 1.8 mm
G:= 22.83 mm
H:= 25.913 to 25.888 mm
J:= 5.45 to 5.80 mm
K:= 5.7 to 5.86 mm

K16 - VVC engines fitted with triple angle valve seats - See illustration M12 5536

Inlet
A:= 15°
B:= 45°
C:= 60°
D:= 0.4 mm radius
E:= 32.560 to 32.573 mm
F:= 1.0 to 1.4 mm
G:= 30.2 mm
H:= 32.475 to 32.500 mm
J:= 5.95 to 6.00 mm
K:= 6.1 mm

Exhaust
A:= 15°
B:= 45°
C:= 60°
D:= 0.4 mm radius
E:= 28.993 to 29.006 mm
F:= 1.4 to 1.8 mm
G:= 26.23 mm
H:= 28.888 to 28.913 mm
J:= 5.45 to 5.50 mm
K:= 6.54 mm

All engines

1. Cut valve seat to correct angle and width.
2. Lap valve to seat.

Valve seats - refacing

CAUTION: Renew worn valve guides before refacing valves and seats.

1. Check condition of valve seats and existing valves that are to be re-used.

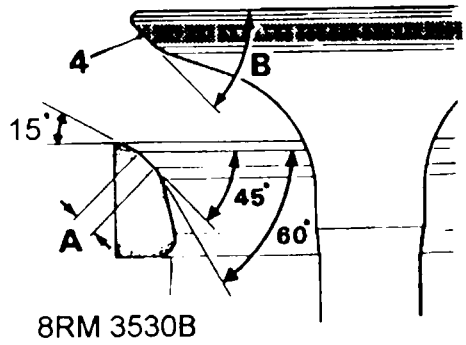

NOTE: Triple angle valve seat illustrated

2. Recut valve seats and use pilot **MS120-6** and the following cutters:-
   MS76-120 - 15° - Triple angle valve seats only.
   MS76-111 60° - To narrow valve seats and obtain seat widths.
   MS76-122 45° - Make final cut and remove any burrs.

Valve seat:
Angle = 45°
Width **A** =
Except triple angle valve seats:
Inlet - 1.5 mm
Exhaust - 1.5 mm
Triple angle valve seats:-
Inlet - 1.0 to 1.4 mm
Exhaust 1.4 to 1.8 mm

Valve face angle **B**:
Inlet = 45°
Exhaust = 45°

CAUTION: Inserts must not stand proud of combustion face of head on completion of recutting operation.

3. Lap each valve to seat using fine grinding paste.
4. Apply Prussian Blue to valve seat, insert valve and press it into position several times without rotating. Remove and check valve for even and central seating:
   Seating position shown by blue should be in centre of valve face.

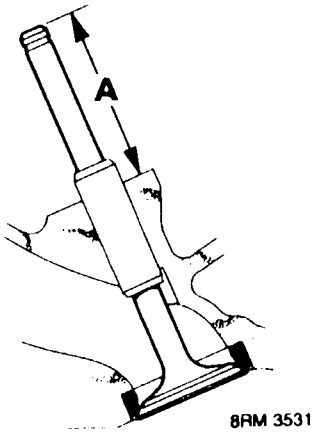

5. Check valve stem fitted height A:

K8:

New = 38.95 to 40.81 mm
Service limit = 41.06 mm

K16:

New = 38.93 to 39.84 mm
Service limit = 40.10 mm

If valve stem fitted height is above service limit, fit new valve and re-check, if still over limit, renew valve seat insert.

All engines

6. Remove all traces of grinding paste on completion.

K16 VVC housing gaskets - remove

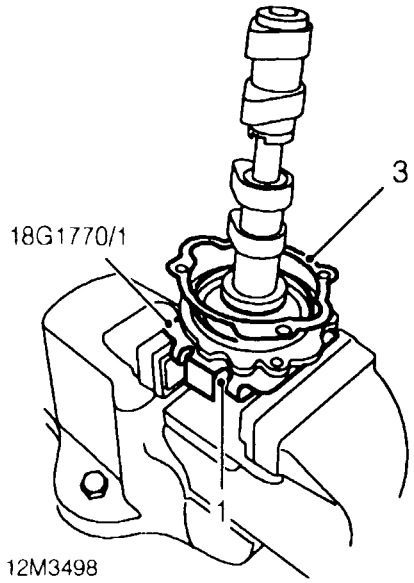

1. Secure VVC housing and camshaft in a soft-jawed vice with camshaft positioned upwards.

CAUTION: Only tighten vice sufficiently to retain housing, damage to mechanism will result if vice is overtightened.

2. Taking care not to allow camshaft to become separated from VVC mechanism, remove clamp **18G 1770** and timing plate **18G 1770/1** - front or **18G 1770/2** - rear.
3. Remove and discard VVC housing gasket.
4. Repeat above procedures for remaining VVC housing gasket.

K16 VVC housing gaskets - refit

NOTE: To assist correct location of VVC housing gasket in its fitted position, apply a light film of grease to gasket face of VVC housing.

1. Lubricate sealing ring of new gasket with engine oil.

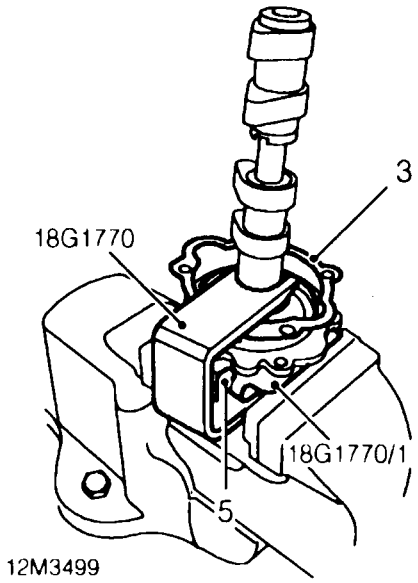

2. Fit timing plate **18G 1770/1** - front or **18G 1770/2** - rear.
3. Fit gasket, align bolt holes.
4. Assemble clamp **18G 1770** to camshaft and VVC assembly, fit camshaft gear bolt and washer to retain clamp.
5. Remove VVC housing and camshaft from vice.
6. Repeat above procedures for remaining VVC housing gasket.

Hydraulic control unit - K16 VVC engines - dismantling

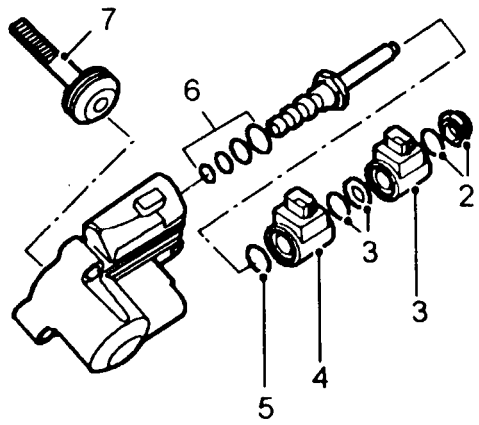

12M3495A

1. Suitably identify each solenoid to its fitted position and note the angle at which it is positioned relative to the hydraulic control unit.
2. Remove nut from sleeve bolt, remove and discard 'O' ring.
3. Remove outer solenoid, washer and 'O' rings; discard 'O' rings.
4. Remove inner solenoid.
5. Remove spool valve, remove and discard 'O' ring from spool valve nut.
6. Remove and discard 4 'O' rings from spool valve.
7. Withdraw piston and rack assembly.

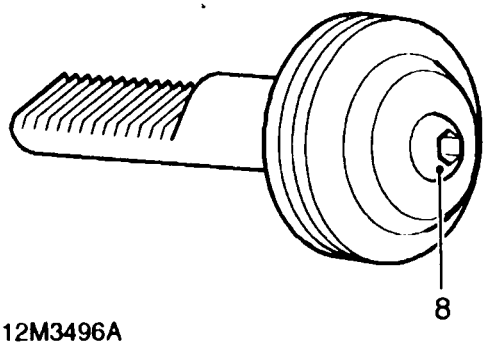

12M3496A

8. Remove and discard screw securing piston to rack, remove and discard piston and seal assembly.

Hydraulic control unit - K16 VVC engines - inspection

1. Check piston and spool valve bores in hydraulic control unit for scoring and corrosion, replace control unit if scoring is evident.
2. Check piston for scoring.

NOTE: Light scoring and corrosion may be removed using grade 600 grade wet or dry paper which has been soaked in engine oil for 30 minutes.

3. Check rack teeth for signs of wear or damage, replace hydraulic control unit if either are evident.
4. Check control shaft teeth for signs of wear or damage, replace control shaft if either are evident.
5. Check that oil passages in spool valve are clear.

Hydraulic control unit - K16 VVC engines - assembling

CAUTION: It is essential to ensure that absolute cleanliness is maintained during the following operations.

1. Thoroughly clean all components, dry with compressed air.
2. Lubricate new labyrinth seals and rack seal with engine oil.

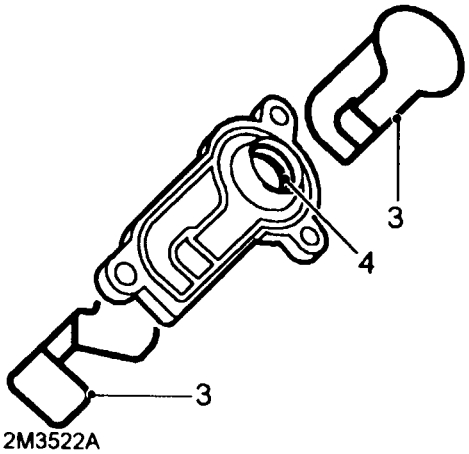

12M3522A

3. Using the fingers only, fit labyrinth seals each side of hydraulic control unit seal plate.

CAUTION: Ensure seals are located beneath retaining lugs.

4. Fit new rack seal to plate.

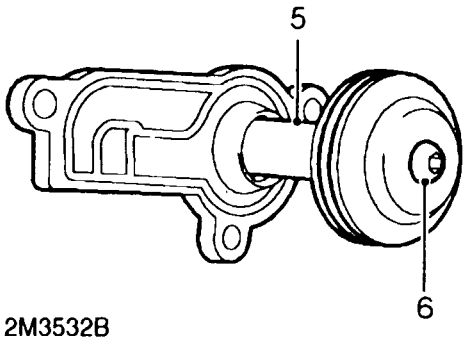

12M3532B

5. Slide piston end of rack through seal.

CAUTION: Only insert rack through seal for a sufficient distance to enable piston to be fitted and take great care that teeth of rack do not contact seal.

6. Secure rack in a soft-jawed vice, fit new piston and seal assembly to rack, fit and tighten new screw supplied with seal kit to 9 Nm.
7. Lubricate piston bore with engine oil.
8. Position seal plate, piston and rack assembly to hydraulic control unit with rack teeth facing towards fixing hole adjacent to solenoid side of unit.

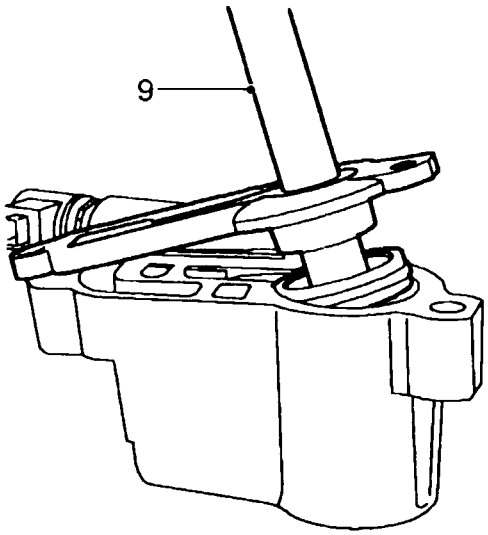

12M3658A

9. Insert piston and rack assembly into bore of housing at an angle as shown, taking care not to damage piston seal on machined edge of oil feed channel. Push piston to top of bore.

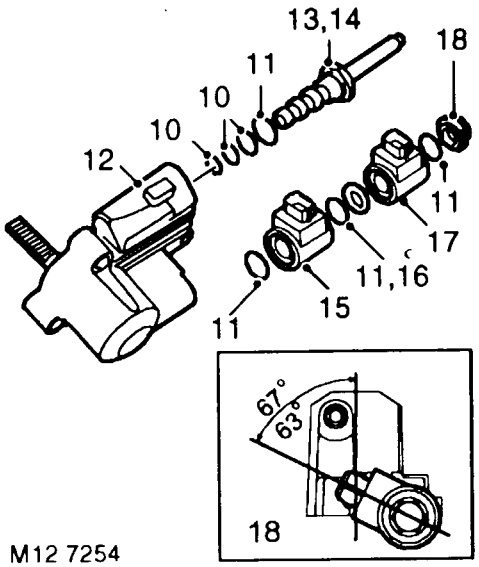

M12 7254

10. Lubricate 3 new 'O' rings with engine oil and fit to spool valve.
11. Lubricate new 'O' rings with engine oil and fit to each side of spool valve, nut, washer, inner solenoid and sleeve bolt side of outer solenoid.
12. Lubricate spool valve and bore in control unit with engine oil.
13. Position spool valve to control unit, fit valve, twisting it slightly as it is inserted to avoid damaging 'O' rings.
14. Tighten spool valve nut to 26 Nm.
15. Position inner solenoid on spool valve ensuring that lettering on end of solenoid is facing away from control unit.
16. Fit washer and 'O' ring.
17. Position outer solenoid on spool valve ensuring that lettering on end of solenoid is facing away from control unit.
18. Position inner and outer solenoids as shown, fit nut to sleeve bolt and tighten to 12 Nm.

CAUTION: Do not exceed specified torque figure.

19. Retain oil temperature transmitter with control unit, plug oil temperature transmitter port to prevent ingress of dirt.

Valves - assembling

1. Using **18G 1577**, fit new valve stem oil seals.
2. Lubricate valve stems and assemble valves, using tool **18G 1519** and adapter **18G 1519/1**, to compress valve spring.

CAUTION: Valve springs are either colour coded or plain, ensure correct springs are fitted:

K8 - Yellow/red
K16 - Non VVC engines - Plain
K16 - VVC engines - Blue

3. Use a wooden dowel and mallet, lightly tap top of each valve assembly two or three times to seat valves and collets.
4. Lubricate outside of tappets and fit tappets in original bores.

Camshafts - K8 and all K16 Non VVC engines - refit

K8

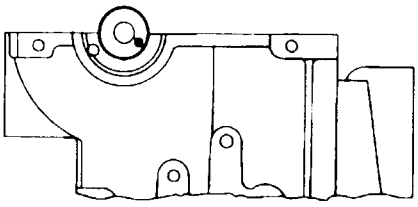

K16

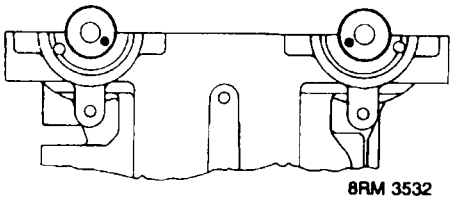

8RM 3532

1. Lubricate bearings and fit camshaft(s) and position drive pin for 90° BTDC as follows:
   K8: Pin at 4 o'clock.
   K16: Inlet pin at 4 o'clock.
   Exhaust pin at 8 o'clock.

Camshaft carrier and oil seal - K8 engines - refit

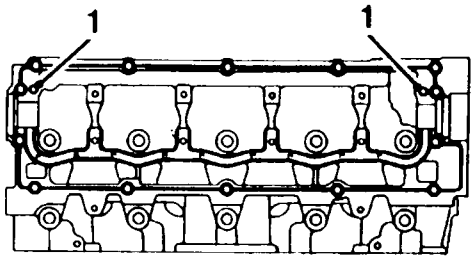

12M0562

1. Ensure 2 locating dowels are fitted in camshaft carrier.
2. Apply continuous, thin beads of sealant, Part Number GUG 705963GM to paths on camshaft carrier as shown and spread to an even film using a roller.

⚠ **CAUTION: Ensure sealant does not enter lubrication grooves on camshaft carrier and that assembly is completed within 20 minutes.**

3. Lubricate camshaft cams and journals with engine oil.

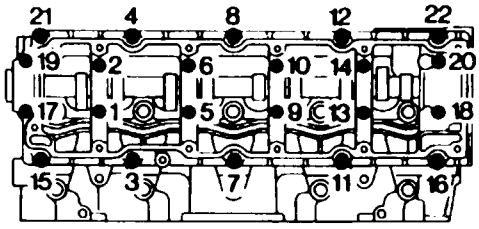

12M0563

4. Fit camshaft carrier, fit and lightly tighten bolts using sequence shown.
5. Tighten all bolts in sequence shown to 10 Nm.

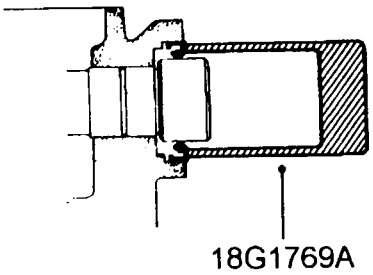

12M0564A

NOTE: Camshaft front oil seal illustrated.

6. Fit oil seal protector **18G 1749** over end of camshaft.
7. Fit new camshaft oil seals using tool **18G 1769A.**

NOTE: Front oil seals are coloured BLACK, rear oil seals are coloured RED.

CAUTION: Oil seals must be fitted dry. Do not use tool 18G 1769 for fitting seals as they will not be positioned correctly within recess.

Camshaft carrier and oil seals - All K16 Non VVC engines - refit

1. Ensure 2 locating dowels are fitted in camshaft carrier.

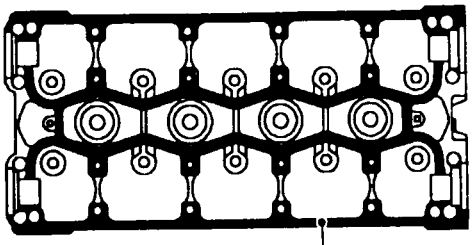

12M3523

2. Apply continuous, thin beads of sealant, Part Number GUG 705963GM to paths on cylinder head as shown then spread to an even film using a roller.

CAUTION: Ensure sealant is kept clear of tappet oil feed holes and lubrication grooves in carrier and that assembly is completed within 20 minutes.

3. Lubricate camshaft cams and journals with engine oil.

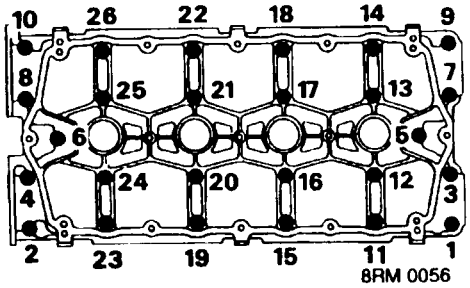

4. Fit camshaft carrier, fit and progressively tighten bolts, in sequence shown, to 10 Nm.

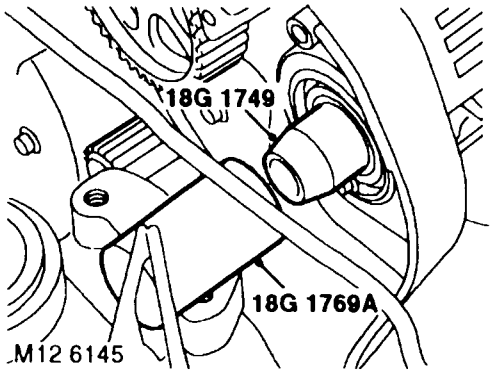

NOTE: Camshaft front oil seal illustrated.

5. Position oil seal protector **18G 1749** over end of camshaft
6. Fit new camshaft oil seals using tool **18G 1769A.**

NOTE: Front oil seals are coloured BLACK, rear oil seals are coloured RED.

CAUTION: Oil seals must be fitted dry. Do not use tool 18G 1769 for fitting seals as they will not be positioned correctly within recess.

7. Fit blanking plate(s), fit and tighten bolts to:
   Inlet camshaft plate - Plug top coil ignition engines only - 6 Nm.
   Exhaust camshaft plate - All engines - 25 Nm.

Camshaft carrier and camshafts - K16 VVC engines - refit

1. Ensure 2 locating dowels are fitted in camshaft carrier.
2. Fit new VVC housing gaskets.

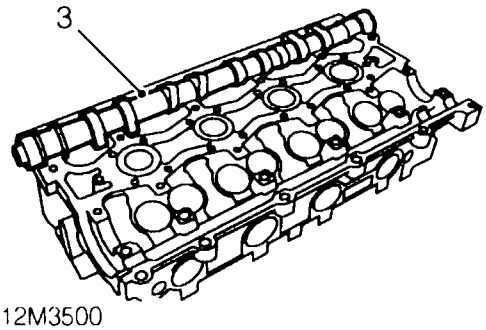

12M3500

3. Lubricate exhaust camshaft cams and journals with engine oil, position camshaft in cylinder head.
4. Lubricate cams and journal of front and rear inlet camshafts with engine oil.
5. Lubricate control shaft with engine oil.

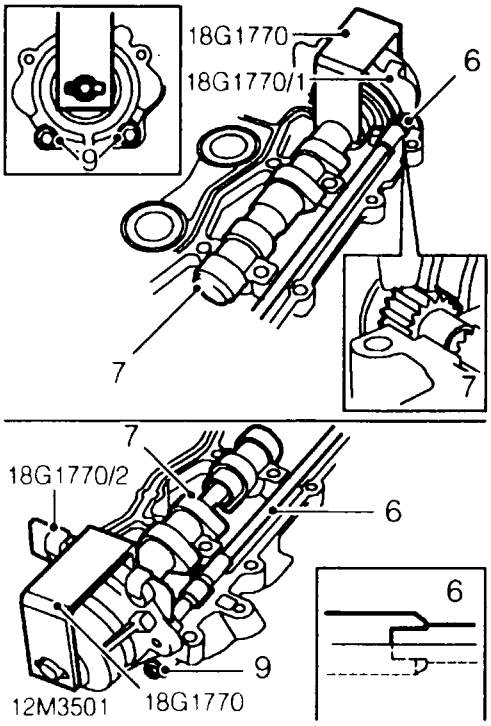

6. Position control shaft in camshaft carrier ensuring that shaft is fully seated in journals and centre of slot in shaft is aligned with cylinder head mating surface of carrier.
7. Position front and rear inlet camshafts and VVC assemblies in camshaft carrier at the same time engaging teeth of control shaft in VVC assemblies.
8. Check that bolt holes in VVC housings are aligned with bolt holes in camshaft carrier, that centre of slot in control shaft is still aligned with cylinder head mating surface of carrier and timing plates **18G 1770/1** - front and **18G 1770/2** - rear are correctly located in the control sleeves and control shaft is still seated in journals.

CAUTION: If bolt holes are not correctly aligned or slot in control shaft has moved, re-position VVC assemblies and shaft as necessary until alignment is correct.

9. Fit and finger tighten slave bolts - front and rear VVC assemblies to camshaft carrier.

NOTE: Slave bolts must be replaced with new Patchlok bolts when camshaft carrier is fitted.

10. Remove clamps **18G 1770.**

CAUTION: Do not remove timing plates at this stage or damage to VVC housing seals will result.

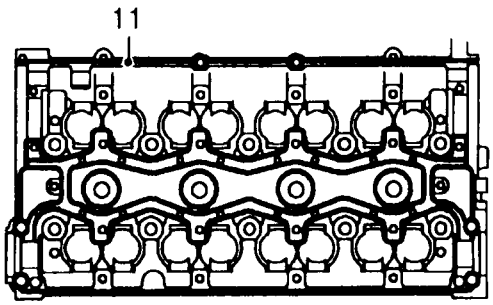

M124948

11. Apply continuous, thin beads of sealant, Part Number GUG 705963GM to paths on cylinder head as shown then spread to an even film using a roller.

CAUTION: Ensure that sealant is kept clear of oil feed holes, oil grooves and control shaft journals and that assembly is completed within 20 minutes.
During the following operations it is essential to ensure that front and rear inlet camshafts are retained in the camshaft carrier and their respective VVC assemblies. Take great care not to rotate camshafts or control shaft.

12. Invert camshaft carrier and fit to cylinder head.

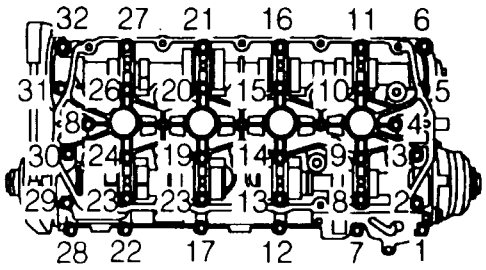

12M3503

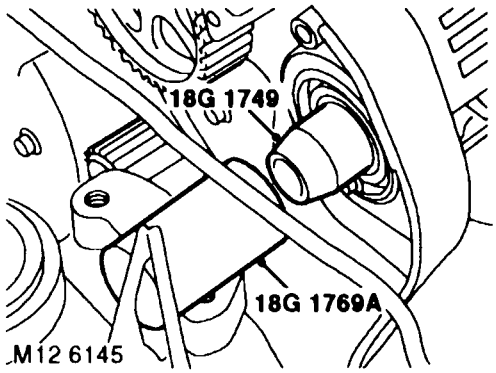

13. Fit 32 bolts noting that 4 longest bolts are fitted at each end of camshaft carrier.
14. Using sequence shown, progressively tighten bolts to 10 Nm.
15. Remove timing plates **18G 1770/1** - front and **18G 1770/2** - rear.

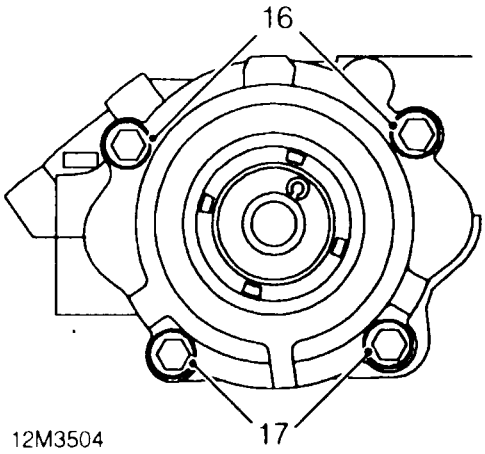

12M3504

16. Fit and tighten new bolts - front and rear VVC housings to camshaft carrier to 10 Nm.
17. Fit and tighten new bolts - VVC housings to cylinder head to 10 Nm.

NOTE: Camshaft front oil seal illustrated.

18. Position oil seal protector **18G 1749** over end of camshaft and fit new exhaust camshaft front and rear oil seals using tool **18G 1769A** .

NOTE: Front oil seals are coloured BLACK, rear oil seals are coloured RED.

CAUTION: Oil seals must be fitted dry. Do not use tool 18G 1769 for fitting seals as they will not be positioned correctly within recess.

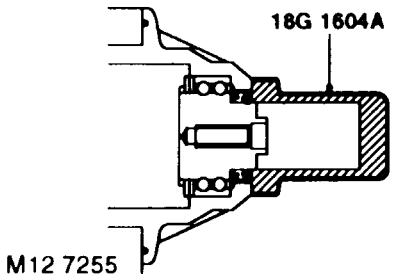

19. Fit new front and rear VVC housing oil seals using tool **18G 1604A.**

NOTE: Front oil seals are coloured BLACK, rear oil seals are coloured RED.

CAUTION: Oil seals must be fitted dry. Do not use tool 18G 1604 for fitting seals as they will not be positioned correctly within recess.

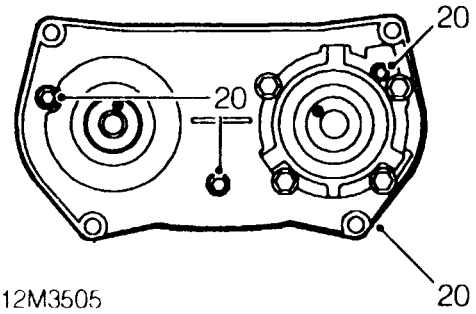

12M3505

20. Fit rear timing belt backplate, fit and tighten bolts to:
M5 bolts - 6 Nm
M6 bolts - 10 Nm.

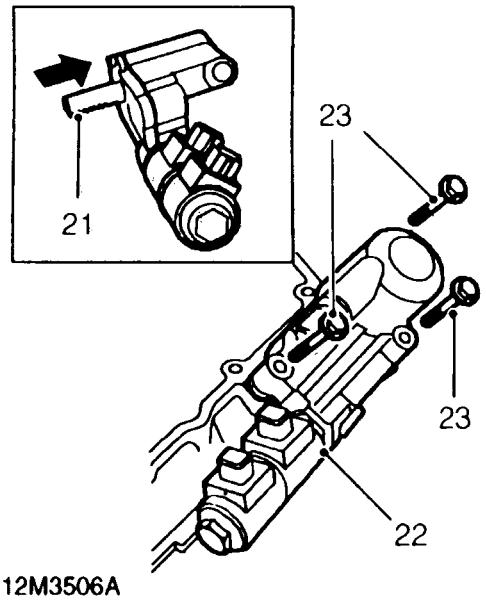

12M3506A

21. Ensure that hydraulic control piston is pushed fully to top of bore and that rack teeth will be aligned to control shaft when control unit is fitted.
22. Position hydraulic control unit and seal plate to camshaft carrier, engage teeth of rack with those of control shaft.
23. Fit and lightly tighten 3 bolts.

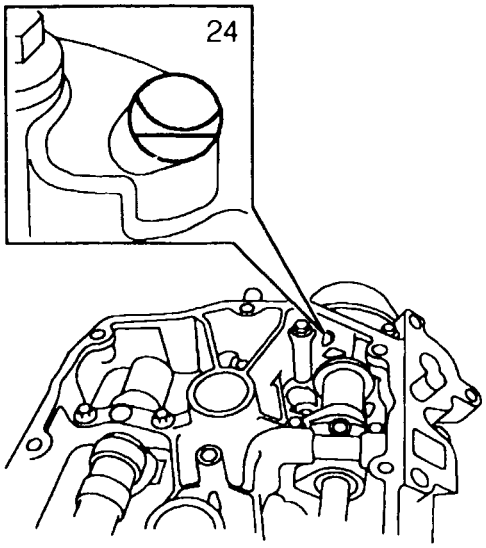

12M3507

24. Check that timing slots in front and rear VVC control sleeves are visible through holes in camshaft carrier.

CAUTION: If timing slots are not visible, carry out following procedure.

25. Remove hydraulic control unit.

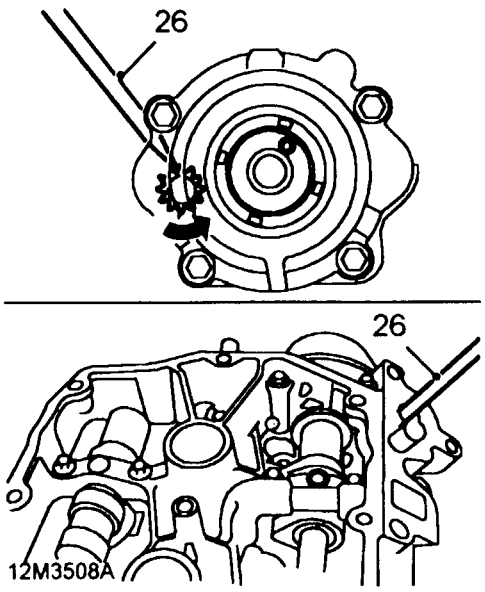

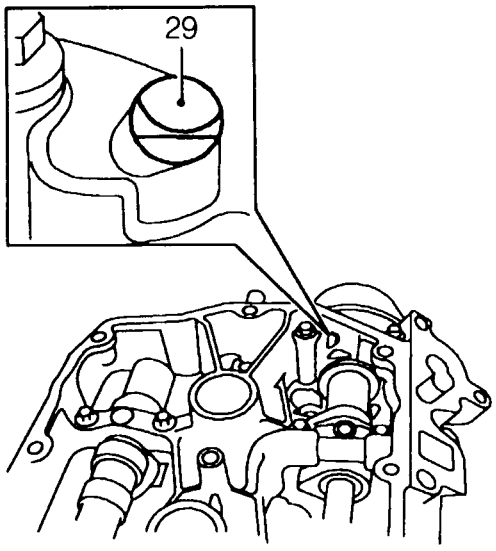

26. Using a screwdriver, rotate control shaft as far as possible in an anti-clockwise direction, viewed from front of camshaft carrier.

NOTE: Timing slots in both VVC control sleeves should now be visible.

27. Push hydraulic control unit piston to top of bore.

28. Fit hydraulic control unit, fit and lightly tighten 3 bolts.

29. Check that timing slots on both front and rear VVC control sleeves are visible. If slots are still not visible, repeat the foregoing procedure as necessary.

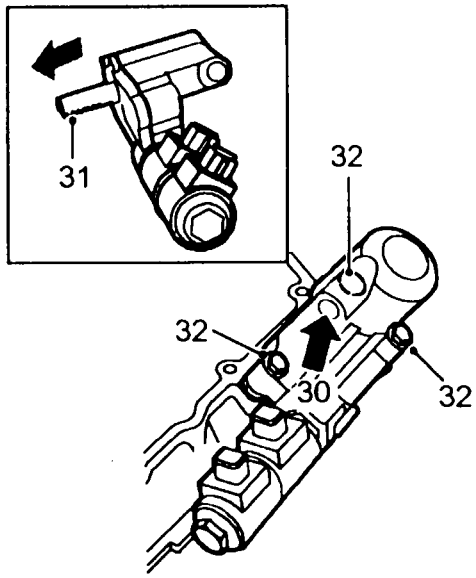

30. Apply low pressure air to oil temperature transmitter port in hydraulic control unit to extend rack.

31. Check that rack is fully extended i.e. rack teeth are at limit of travel and timing slots are no longer visible through holes in camshaft carrier.

32. Tighten hydraulic control unit bolts to 25 Nm.

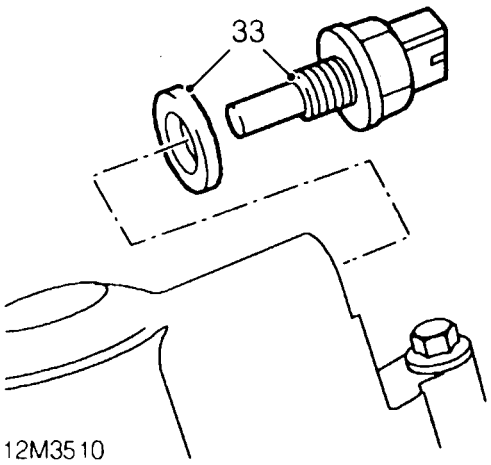

33. Fit a new sealing washer to oil temperature transmitter,
34. Fit oil temperature transmitter and tighten to 15 Nm.
35. Thoroughly clean rear timing gears.

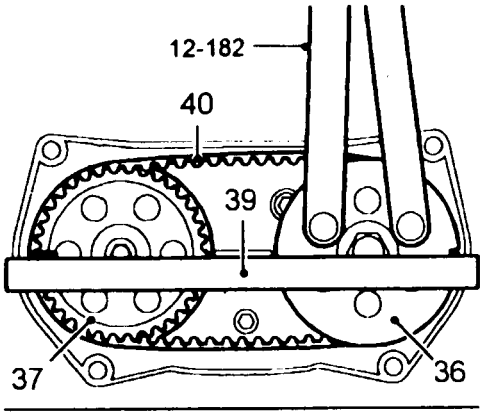

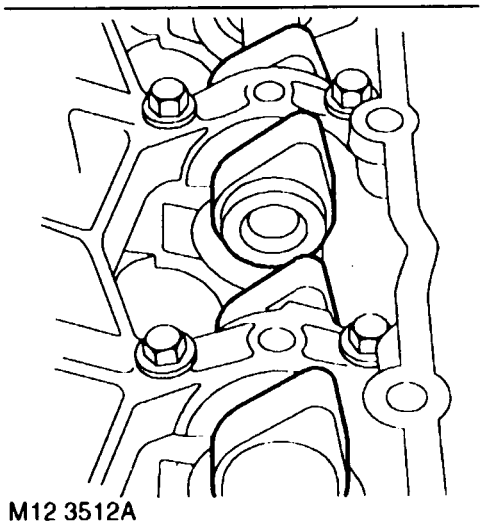

36. Fit rear inlet camshaft timing gear, fit but do not tighten bolt.
37. Fit exhaust camshaft rear timing gear, fit but do not tighten bolt.
38. Using tool **12-182**, rotate both timing gears until timing marks on gears are facing outwards.
39. Check alignment of timing marks using a straight edge.

NOTE: With timing marks in this position, the lobes of numbers 3, 4, 5 and 6 inlet cams will be facing upwards.

40. Remove bolt and withdraw rear inlet camshaft gear sufficiently to enable a new rear timing belt to be fitted, fit rear timing belt; refit bolt and washer.

CAUTION: Ensure that camshafts do not rotate.

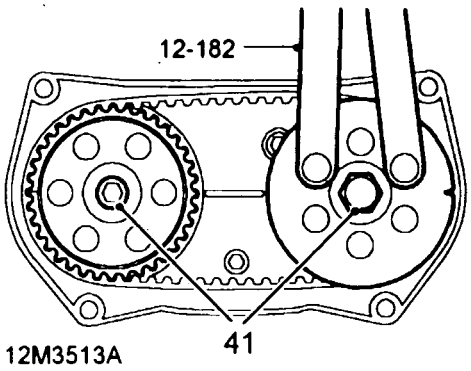

41. Restrain each timing gear in turn using tool **12-182** and tighten bolts to 65 Nm.

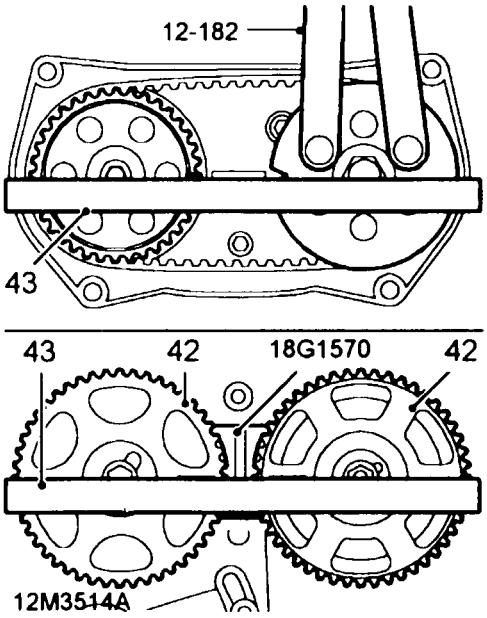

42. Temporarily fit front timing gears to their respective camshafts, rotate gears until timing marks on all 4 gears are aligned, facing inwards; fit tool **18G 1570.**

43. Check alignment of each pair of timing marks in turn using a straight edge.

44. Remove tool **18G 1570** and front timing gears.

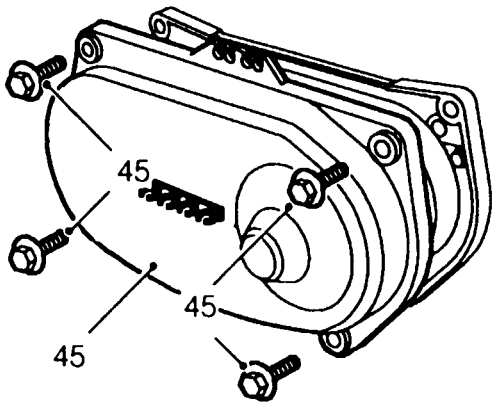

45. Fit rear timing belt cover, fit and tighten screws to 10 Nm.

Cylinder head - K8 and K16 Non VVC engines fitted with a distributor - refit

CAUTION: If crankshaft has been rotated, check that timing marks on crankshaft timing gear are aligned with flange on oil pump and that tool 18G 1571 is locking flywheel.

1. Check cylinder head bolts in oil rail. *See **Cylinder head bolt inspection.*** - Renew bolts as necessary.
2. Check that 2 locating ring dowels are fitted in cylinder block.

CAUTION: The type of ring dowel fitted must be maintained. A nylon ring dowel must not be used in place of a steel ring dowel.

3. Oil cylinder head bolts, under head and threads.
4. Remove cylinder liner retainer clamps **18G 1736.**

CAUTION: Do not rotate crankshaft until cylinder head bolts are fitted.

5. Fit new cylinder head gasket DRY, with identification markings facing upwards, on to cylinder block.

CAUTION: Take care not to damage sealing faces of gasket.

6. Using assistance, fit cylinder head on to cylinder block carefully locating ring dowels.
7. Carefully enter cylinder head bolts in their original fitted locations; DO NOT DROP. Lightly tighten bolts.

K8

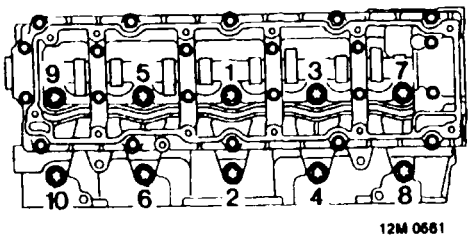

8. Tighten cylinder head bolts progressively in sequence shown to 20 Nm.
   Use a felt tip pen and mark position of radial mark on each bolt head.
   Tighten all bolts in sequence shown through 180°
   Tighten all bolts in sequence shown through another 180° and align mark.

CAUTION: If any bolt is overtightened, back off 90° and re-align.

K16

9. Temporarily fit timing gears to camshafts, fit but do not fully tighten bolts.

NOTE: This will enable camshafts to be rotated in order to enable remaining bolts to be tightened:
Early engines:- bolts 1 and 2
Later engines fitted with modified camshafts:- bolts 3 and 4

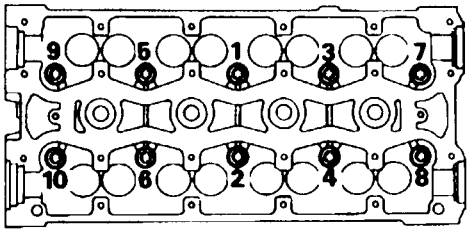

8RM 0057

10. Tighten cylinder head bolts progressively in sequence shown to 20 Nm.
Use a felt tip pen and mark position of radial mark on each bolt head.
Tighten all 10 bolts in sequence shown through 180°
Tighten all bolts in sequence shown through another 180° and align mark.

CAUTION: If any bolt is overtightened, back off 90° and re-align.

11. Upon completion of tightening sequence, position camshafts with inlet pin at 4 o'clock and exhaust pin at 8 o'clock; remove timing gears.

CAUTION: Ensure camshafts do not rotate when gears are removed.

12. *Automatic timing belt tensioner:* Fit tensioner pillar bolt and tighten to 25 Nm.

K8 and K16

13. Fit new spark plugs, tighten to 25 Nm.
14. Fit camshaft cover and timing gears.
15. *K8 engines:* - Fit HT lead brackets, fit and tighten bolts to 10 Nm.

Cylinder head - K16 Non VVC engines fitted with plug top coil ignition system - refit

CAUTION: If crankshaft has been rotated, check that timing marks on crankshaft timing gear are aligned with flange on oil pump and that tool 18G 1674 is locking flywheel.

1. Check cylinder head bolts in oil rail. *See* ***Cylinder head bolt inspection.*** - Renew bolts as necessary.
2. Check that 2 locating ring dowels are fitted in cylinder block.

CAUTION: The type of ring dowel fitted must be maintained. A nylon ring dowel must not be used in place of a steel ring dowel.

3. Oil cylinder head bolts, under head and threads.
4. Remove cylinder liner retainer clamps **18G 1736.**

CAUTION: Do not rotate crankshaft until cylinder head bolts are fitted.

5. Fit new cylinder head gasket DRY, with identification markings facing upwards, on to cylinder block.

CAUTION: Take care not to damage sealing faces of gasket.

6. Using assistance, fit cylinder head on to cylinder block carefully locating ring dowels.
7. Carefully enter cylinder head bolts in their original fitted locations; DO NOT DROP. Lightly tighten bolts.
8. Temporarily fit timing gears to camshafts, fit but do not fully tighten bolts.

NOTE: This will enable camshafts to be rotated in order to enable bolts 3 and 4 to be tightened.

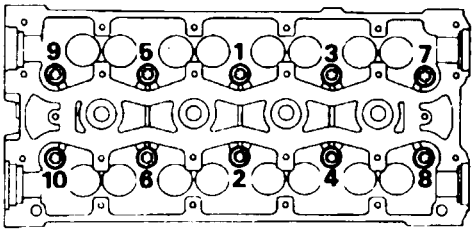

8RM 0057

9. Tighten all 10 cylinder head bolts progressively in sequence shown to 20 Nm.
   Use a felt tip pen and mark position of radial mark on each bolt head.
   Tighten all bolts in sequence shown through 180°
   Tighten all bolts in sequence shown through another 180° and align mark.

CAUTION: If any bolt is overtightened, back off 90 and re-align.

10. Upon completion of tightening sequence, position camshafts with inlet pin at 4 o'clock and exhaust pin at 8 o'clock; remove timing gears.

CAUTION: Ensure camshafts do not rotate when gears are removed.

11. Fit camshaft cover and timing gears.
12. Fit new spark plugs, tighten to 25 Nm.

If fitted

13. Connect multiplugs to coils, position coils to numbers 1 and 3 spark plugs, fit bolts and tighten to 8 Nm.
14. Secure multiplug harness in clips.
15. Connect HT leads to numbers 2 and 4 spark plugs, secure leads in clips.
16. Position multiplug bracket to camshaft carrier, fit bolts and tighten to 15 Nm.

All engines

17. Lubricate new 'O' ring with engine oil and fit to camshaft sensor.
18. Fit camshaft sensor, fit bolt and tighten to 5 Nm,secure harness in clip.
19. Fit timing belt tensioner pillar bolt and tighten to 25 Nm.

NOTE: Do not fit timing belt tensioner until camshaft timing belt is fitted.

Cylinder head - K16 VVC engines - refit

CAUTION: If crankshaft has been rotated, check that timing mark on crankshaft timing gear is aligned with flange on oil pump and that tool 18G 1571 is locking flywheel.

1. Check cylinder head bolts in oil rail. *See **Cylinder head bolt inspection*** - Renew bolts as necessary.
2. Check that 2 locating dowels are fitted in cylinder block.
3. Oil cylinder head bolts, under heads and threads of bolts.
4. Remove cylinder liner retainer clamps **18G 1736.**

CAUTION: Do not rotate crankshaft until cylinder head bolts are fitted.

5. Fit new cylinder head gasket DRY, with identification marks facing upwards on to cylinder block.

CAUTION: Take care not to damage sealing faces of gasket.

6. Using assistance, fit cylinder head on to cylinder block carefully locating ring dowels.
7. Carefully enter cylinder head bolts in their original fitted locations; DO NOT DROP. Lightly tighten bolts.

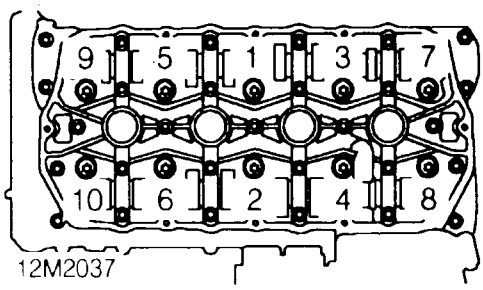

8. Tighten cylinder head bolts progressively in sequence shown to 20 Nm.
   Use a felt tip pen and mark position of radial mark on each bolt head.
   Tighten bolts in sequence shown through 180°
   Tighten all bolts in sequence shown a further 180° and align marks.

CAUTION: If any bolt is overtightened, back off 90° and re-align.

9. Fit camshaft cover and timing gears.
10. Fit new spark plugs, tighten to 25 Nm.

Camshaft cover and timing gear - K8 engines - refit

1. Position a new gasket, dry, to camshaft cover.

NOTE: Ensure spigots on camshaft cover locate in holes in gasket.

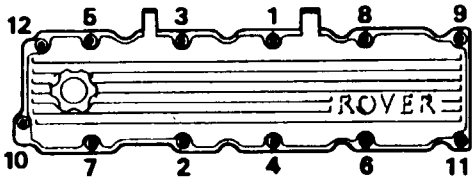

12M0560

2. Position camshaft cover on cylinder head.
3. Fit bolts and tighten progressively in sequence shown to 10 Nm.
4. Position timing belt upper rear cover to cylinder head, fit screws and tighten to 9 Nm.

NOTE: Longest screw secures cover to coolant pump.

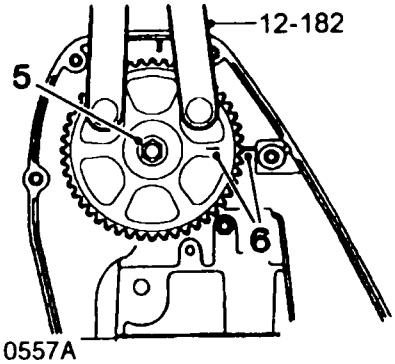

12M 0557A

5. Fit camshaft gear to camshaft, hold gear using tool **12-182** and tighten bolt to:
   M8 bolt - 35 Nm
   M10 bolt - 65 Nm

6. Align camshaft gear timing mark to cylinder head top face using tool **12-182.**
7. Fit camshaft timing belt tensioner.

Camshaft cover and timing gears - K16 engines not fitted with plug top coil ignition system - refit

1. Clean mating surfaces and inside of camshaft cover.
   If necessary, wash oil separator elements in suitable solvent and blow dry.
2. Fit new camshaft cover gasket dry, to camshaft carrier, with either 'TOP' mark towards the inlet manifold or 'EXHAUST MAN SIDE' towards exhaust manifold.

Camshaft cover with pillar bolts

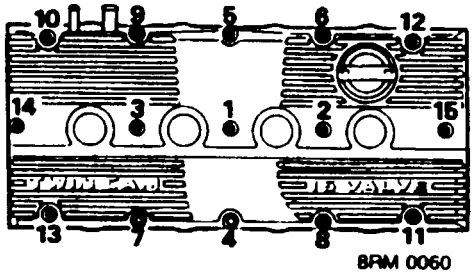

3. Fit camshaft cover on to camshaft carrier, fit 13 bolts at positions 1 and 4 to 15. Fit pillar bolts at positions 2 and 3. Tighten all bolts, in sequence shown, to 10 Nm.

Camshaft cover with 'cast-in' supports

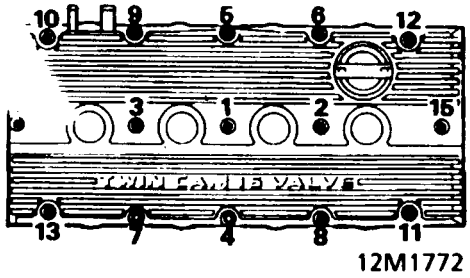

4. Fit camshaft cover on to camshaft carrier, fit bolts and tighten in sequence shown to 10 Nm.

All camshaft covers

5. *Non VVC engines:* Fit air cleaner support bracket, tighten bolts to 10 Nm.
6. Locate HT leads in clips and press plug tubes on to spark plugs.
7. Fit spark plug cover to camshaft cover, tighten screws to 10 Nm.
8. Position timing belt upper rear cover to cylinder head, fit screws and tighten to 9 Nm.

NOTE: Longest screw secures cover to coolant pump.

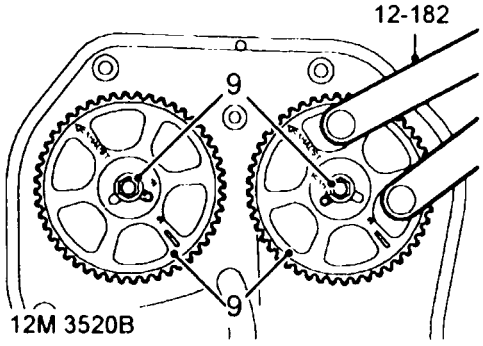

NOTE: Non VVC timing gears illustrated.

9. Fit camshaft gears to their respective camshafts ensuring that, on non VVC engines, drive gear pins are located in correct slot in drive gears, hold gears using tool **12-182** and tighten bolts to:
   M8 bolts - 35 Nm
   M10 bolts - 65 Nm

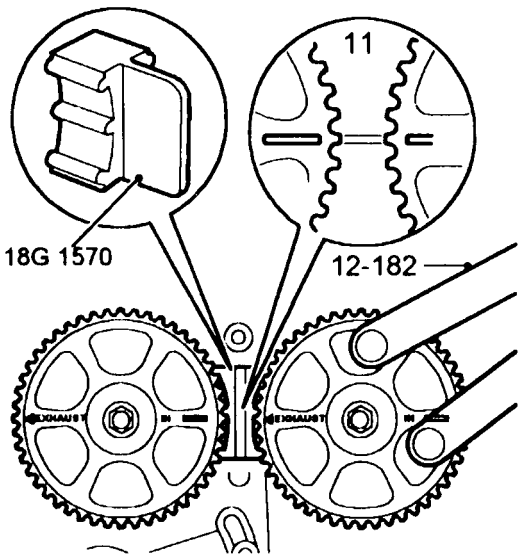

NOTE: VVC camshaft timing marks are shown in the inset on the illustration.

10. *Non VVC engines:* Using tool **12-182,** align camshaft gear timing marks.
11. *VVC engines:* Check that camshaft gear timing marks are still aligned, reposition gears if necessary using tool **12-182.**
12. Fit camshaft gear locking tool **18G 1570.**

Later VVC engines

13. Lubricate a new 'O' ring with engine oil and fit to camshaft sensor.
14. Fit camshaft sensor, fit bolt and tighten to 5 Nm.
15. *VVC and K16 engines fitted with manual timing belt tensioner:* Fit camshaft timing belt tensioner.
16. *K16 engines fitted with automatic timing belt tensioner:* Fit new camshaft timing belt.

Camshaft cover and timing gears - K16 engines fitted with plug top coil ignition system - refit

1. Clean mating surfaces and inside of camshaft cover.
   If necessary, wash oil separator element in suitable solvent and blow dry.
2. Fit new camshaft cover gasket dry, to camshaft carrier, with either 'TOP' mark towards the inlet manifold or 'EXHAUST MAN SIDE' towards exhaust manifold.

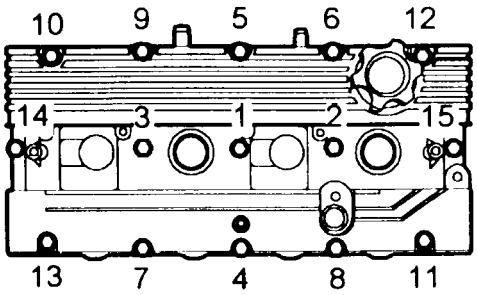

3. Fit camshaft cover on to camshaft carrier, fit bolts and tighten in sequence shown to 10 Nm.
4. Lubricate a new 'O' ring with engine oil and fit to camshaft sensor.
5. Fit camshaft sensor, fit bolt and tighten to 5 Nm.
6. Secure harness to clips on camshaft cover.
7. Fit spark plug cover, fit screws and tighten to 10 Nm.

NOTE: Short screw is fitted in centre of cover.

8. Position timing belt upper rear cover to cylinder head, fit screws and tighten to 9 Nm.

NOTE: Longest screw secures cover to coolant pump.

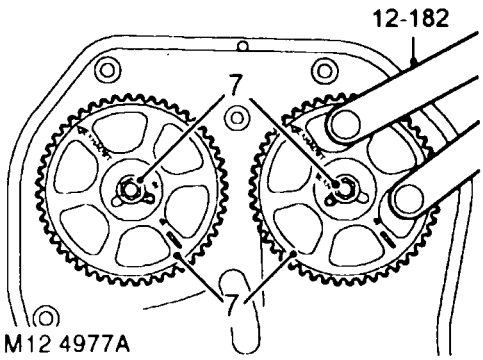

9. Fit camshaft gears to their respective camshafts ensuring that drive gear pins are located in correct slot in drive gears, hold gears using tool **12-182,** fit and tighten bolts to 65 Nm.

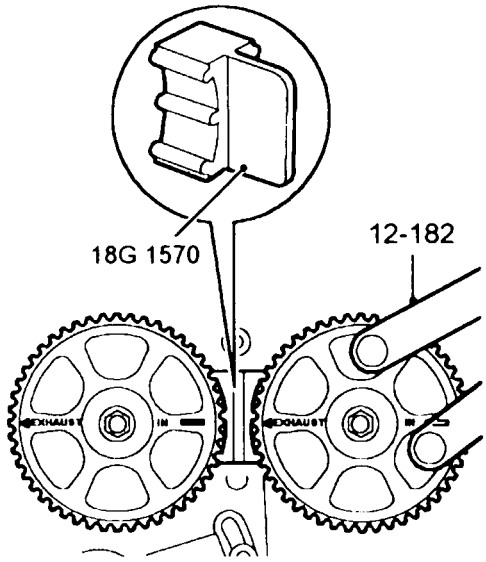

10. Using tool **12-182,** align camshaft gear timing marks.
11. Fit camshaft gear locking tool **18G 1570.**
12. Fit new camshaft timing belt.

NOTE: Timing belt tensioner is fitted when timing belt is fitted.

Camshaft timing belt manual tensioner - refit

NOTE: On engines fitted with an automatic tensioner, tensioner is fitted when timing belt is fitted.

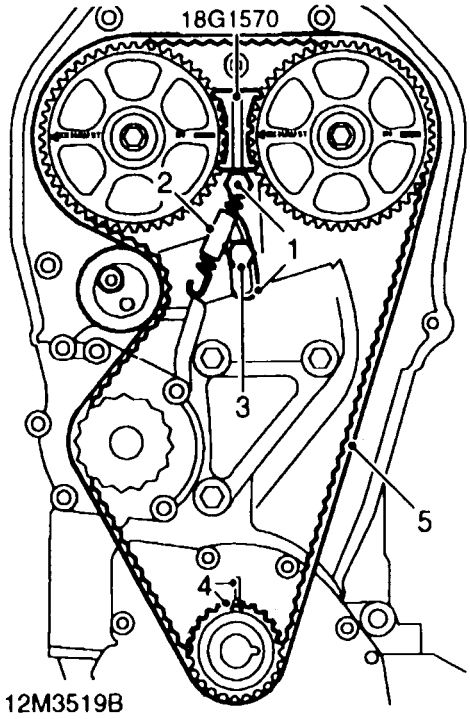

NOTE: K16 non VVC engine illustrated. On VVC engines, tensioner spring and pillar bolt are supplied with replacement timing belt.

1. Fit timing belt tensioner and pillar bolt, tighten bolt to 25 Nm.
2. Connect tensioner spring to tensioner and pillar bolt.

CAUTION: Ensure correct spring is fitted:

K8 and K16 non VVC engines - spring is fitted with a sleeve.
K16 VVC engines - spring is not fitted with a sleeve.

3. Tighten tensioner backplate screw to 10 Nm to retain tensioner in released position.

4. Check correct alignment of timing marks on crankshaft gear to mark on oil pump.
5. Fit and adjust a new camshaft timing belt.

CAUTION: K16 VVC engines:- Remove and discard tensioner spring and pillar bolt on completion of camshaft timing belt adjustment.

Distributor - K8 and K16 non VVC engines - if fitted - refit

K8

1. Fit new 'O' ring to distributor.
2. Position distributor and turn rotor to engage offset drive, align reference mark or centralise distributor and lightly tighten screws.
3. Fit distributor cap and connect plug leads.

K16

4. Fit anti-flash shield and rotor arm. Use new rotor arm screw and tighten to 10 Nm.
5. Fit distributor cap assembly.
6. Place HT lead retaining plate and grommet in position, connect plug leads.
7. Fit HT lead cover, tighten screws to 5 Nm.

CYLINDER HEAD BOLTS INSPECTION

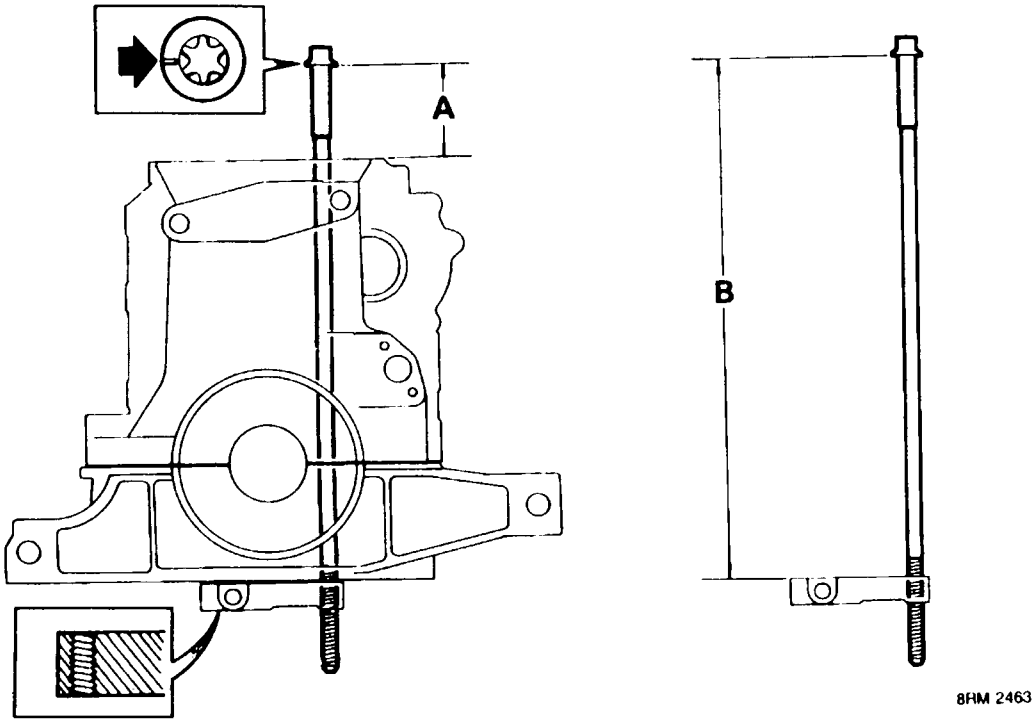

1. Retain bolts in fitted order.
2. Wash all bolts, wipe dry and lightly oil threads.

Cylinder head bolts may be re-used provided they pass one of the following tests.

Test with cylinder head removed

1. Carefully enter cylinder head bolts in their original fitted location, DO NOT DROP. Screw each bolt by hand into oil rail.

CAUTION: It will be necessary to temporarily remove cylinder liner retainer clamps 18G 1736 in order to test the bolt used with the retainer clamp. Retainer clamps should only be removed one at a time and replaced immediately bolt test is completed. Take great care not to rotate crankshaft or disturb cylinder liners whilst clamps are removed.

2. Measure distance from cylinder block face to under bolt head 'A' in illustration:
   97 mm or less, bolt may be re-used.
   Over 97 mm, new bolt must be used.

Test with oil rail removed

1. Ensuring cylinder head bolts are in their original fitted location, screw each bolt by hand into oil rail.
2. If full length of thread is engaged, bolt may be re-used.
3. If full length of thread is not engaged, measure distance from top face of oil rail to under bolt head 'B' in illustration:
   378 mm or less, bolt may be re-used.
   Over 378 mm, new bolt must be used.

CAUTION: A new oil rail must be fitted if a thread is damaged. Thread inserts (Helicoil) are not acceptable.

CRANKSHAFT, MAIN & BIG-END BEARINGS

Crankshaft end-float - checking

CAUTION: Crankshaft end-float must be checked and recorded prior to removing cylinder head.

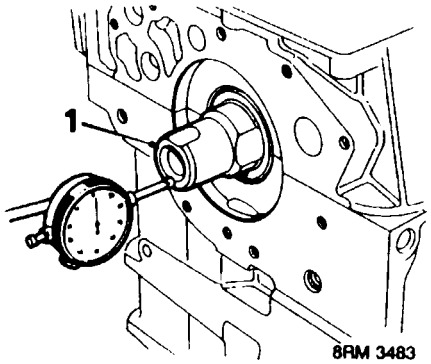

1. Check crankshaft end-float, using a DTI. Carefully lever against flywheel and press crankshaft away from DTI, zero DTI and push crankshaft towards DTI:
   Crankshaft end-float = 0.10 to 0.25 mm
   Service limit = 0.34 mm
2. Record end-float figure obtained.

Crankshaft, main and big-end bearings - remove

1. Remove flywheel.
2. Remove tool **18G 1571.**
3. Remove and discard camshaft timing belt.

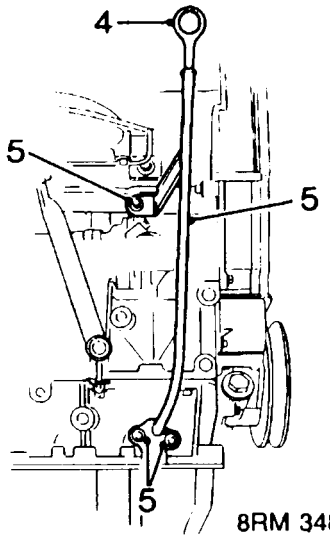

4. Withdraw dipstick
5. Remove 3 screws and dipstick tube, discard gasket.
6. Remove cylinder head assembly.

CAUTION: Ensure cylinder liner retainer clamps 18G 1736 are fitted.

7. Remove oil pump.
8. Using assistance, position cylinder block, cylinder head face down, on 2 wooden blocks.

CAUTION: Ensure that wooden blocks are of sufficient thickness to prevent cylinder liner clamps contacting workbench.

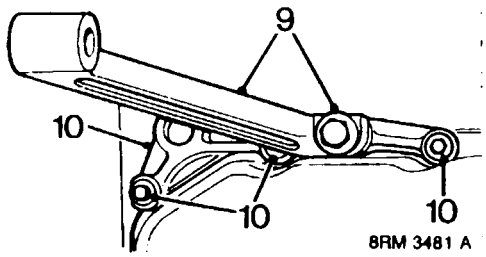

9. Remove bolt and anti-beaming bracket - where fitted.
10. Remove 3 M6 x 35 bolts and anti-beaming bracket support; discard bolts.

Pressed steel sump

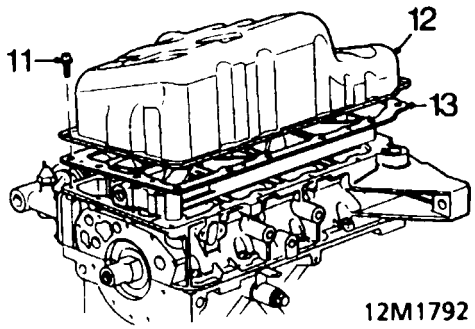

11. Remove and discard 14 bolts securing sump to bearing ladder, (11 bolts if anti-beaming bracket support is removed).
12. Remove sump.
13. Release gasket from sump.

NOTE: Gasket may be re-used if in good condition.

Alloy sump

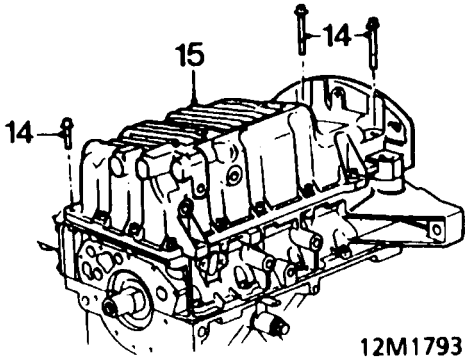

14. Progressively slacken then remove 14 bolts securing sump to bearing ladder noting the fitted position of 2 M8 x 60 bolts.
15. Using a mallet, gently tap sump sideways to release sealant bond; remove sump.

CAUTION: Do not lever between sump flange and bearing ladder.

16. Temporarily remove cylinder retainer liner clamps **18G 1736.**

CAUTION: Do not rotate crankshaft until retainer clamps are refitted.

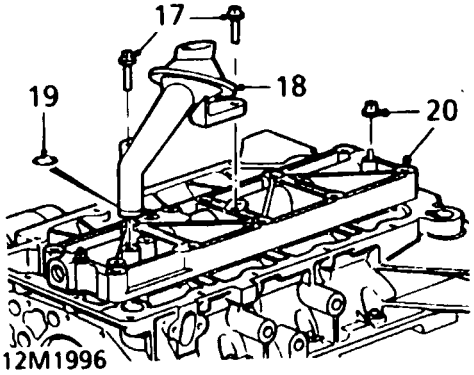

17. Remove 2 screws, suction pipe to oil rail.
18. Remove suction pipe.
19. Discard 'O' ring.
20. Remove 2 nuts securing oil rail, remove rail.

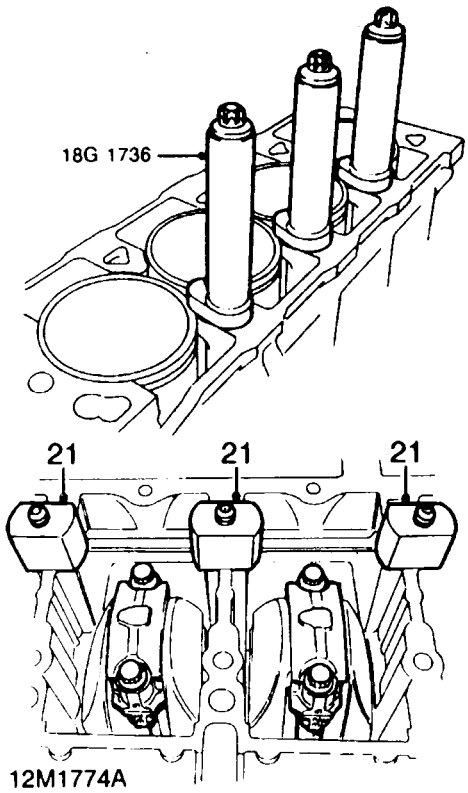

21. Fit cylinder liner retainer clamps **18G 1736** using nylon nuts supplied to retain the clamps. Ensure that feet of clamps do not protrude over cylinder bores. Tighten bolts sufficiently to retain clamps.

Big-end bearings - remove

1. Refit crankshaft timing gear and pulley.
2. Fit pulley bolt and washer, lightly tighten bolt.
3. Ensure that cylinder liner retainer clamps **18G 1736** and nylon nuts are fitted and that feet of clamps do not protrude over cylinder liner bores.

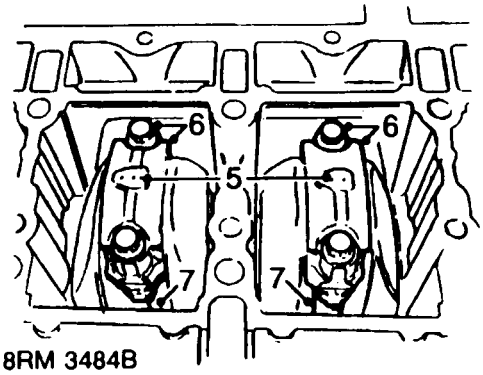

4. Rotate crankshaft to bring Numbers 2 and 3 pistons to BDC.

CAUTION: Crankshaft will be tight, do not rotate crankshaft more than absolutely necessary.

5. Make cylinder number reference mark on big-end bearing caps.

NOTE: Number stamped below cap joint is bearing bore size code. Number stamped on connecting rod is cylinder number and letter is weight code.

6. Remove 4 dowel bolts and 2 big-end bearing caps from Numbers 2 and 3 connecting rods, keep dowel bolts and caps in their fitted order. Remove and discard big-end bearing shells.
7. Release connecting rods from the crankshaft, carefully push pistons to top of their bores.
8. Rotate crankshaft 180°.
9. Remove Numbers 1 and 4 big-end caps, remove and discard bearing shells. Push pistons to top of their bores.
10. Remove and discard 4 big-end bearing shells from connecting rods.

Crankshaft - remove

1. Remove big-end bearings, caps and bearing shells.
2. Remove pistons and cylinder liners.
3. Using assistance, position cylinder block, cylinder head face downwards on a smooth, clean wooden surface.

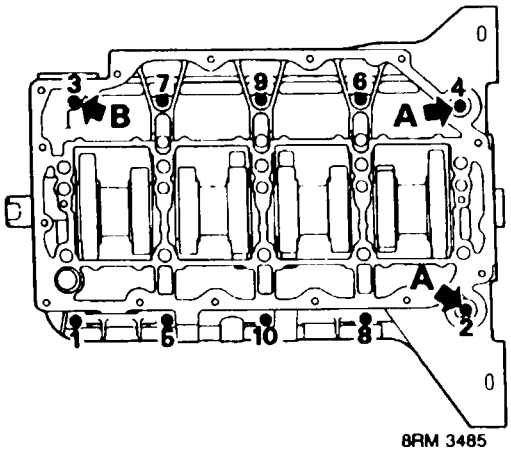

4. Working in sequence shown, slacken then remove 10 bolts securing bearing ladder.

NOTE: 2 bolts 'A' are under the flanges of the rear mounting brackets. Also note position of flanged head longer bolt 'B' at front end of ladder.

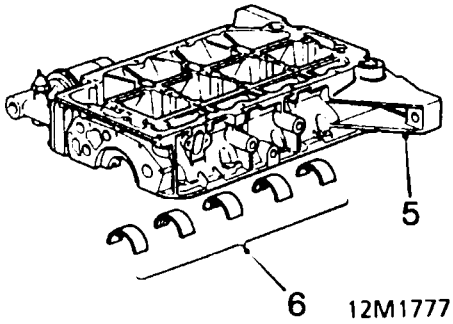

5. Remove bearing ladder.
6. Remove and discard main bearing shells from bearing ladder.

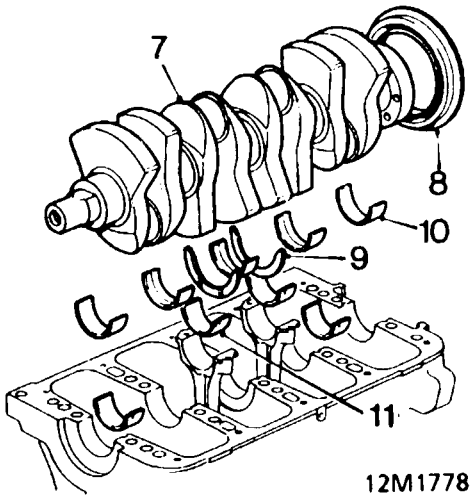

7. Using assistance, lift crankshaft from cylinder block.
8. Remove and discard crankshaft rear oil seal.
9. Remove 2 thrust washer halves from Number 3 bearing position.

CAUTION: Do not discard thrust washers at this stage.

10. Remove and discard main bearing shells from cylinder block.

Crankshaft - inspection

1. Clean joint surfaces on bearing ladder and cylinder block using suitable solvent.
   DO NOT USE A METAL SCRAPER ON SEALING SURFACES.
   Blow out crankshaft and bearing ladder oilways.
2. Measure total thickness of thrust washers removed and compare with new.
   Total thickness of new thrust washer halves = 5.22 to 5.30 mm.
3. Subtract total thickness of original thrust washers from total thickness of new thrust washers.
4. Add figure obtained to crankshaft end-float figure obtained.
5. If resultant figure will ensure crankshaft end-float is within limits specified, fit new thrust washers. If fitting new thrust washers will not bring end-float within limits, crankshaft must be replaced.
   Crankshaft end-float = 0.10 to 0.25 mm
   Service limit = 0.34 mm
6. Record main bearing code letters from bearing ladder.
   Record main bearing code numbers from crankshaft front web. First letter and number is Number 1 main bearing.

CAUTION: Crankshafts fitted to later engines have increased main journal diameters. Commencing engine numbers for the modified crankshafts are listed in Information. The modified crankshafts may be fitted as replacements to engines prior to these engine numbers. For inspection purposes, journal sizes on crankshafts fitted to early engines are listed as Type A whilst those fitted to later engines are listed as Type B. Main bearing shell sizes and colour codes for both types of crankshaft remain unchanged.

7. Check crankshaft main journal diameters:

Type A crankshafts
Crankshaft journal tolerance:
Grade 1 = 47.993 to 48.000 mm
Grade 2 = 47.986 to 47.993 mm
Grade 3 = 47.979 to 47.986 mm
Clearance in bearings = 0.02 to 0.05 mm
Maximum out of round = 0.010 mm

Type B crankshafts
Crankshaft journal tolerance:
Grade 1 = 48.000 to 48.007 mm
Grade 2 = 47.993 to 48.000 mm
Grade 3 = 47.986 to 47.993 mm
Clearance in bearings = 0.013 to 0.043 mm
Maximum out of round = 0.010 mm

8. Replace crankshaft if outside tolerance.
9. Determine the appropriate bearing shells to be fitted from the main bearing size selection and type tables.

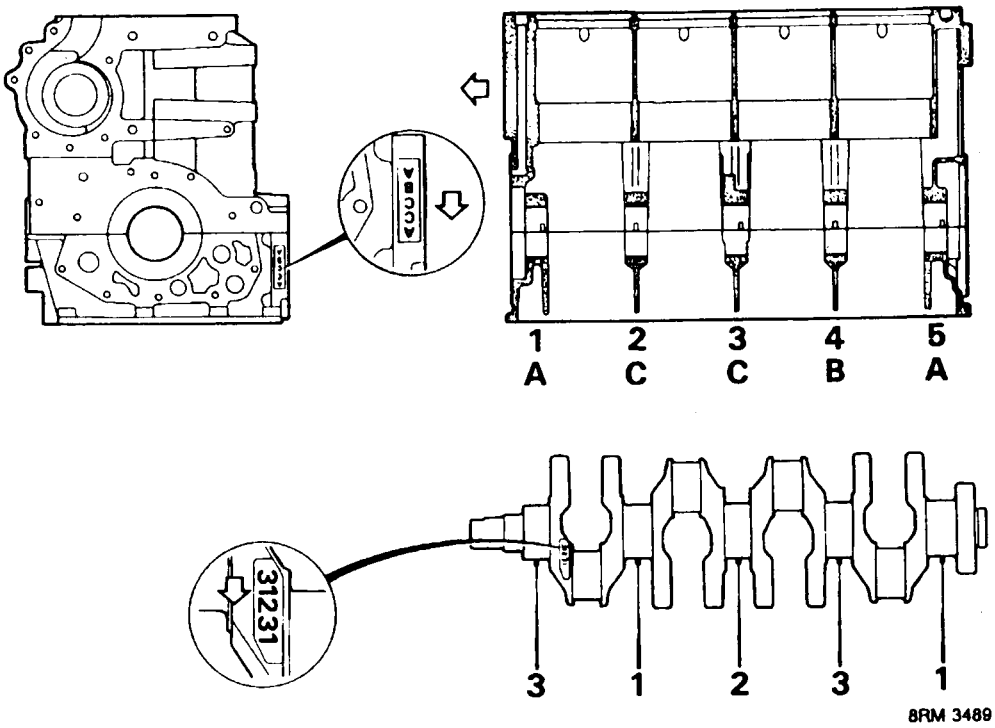
1
A
2
C
3
C
4
B
5
A
31231
3
1
2
3
1
8RM 3489

Main bearings selection

Main bearings size selection table

Bearing ladder	Crankshaft main journals		
	Grade 1	**Grade 2**	**Grade 3**
Grade A	BLUE - BLUE	RED - BLUE	RED - RED
Grade B	BLUE - GREEN	BLUE - BLUE	RED - BLUE
Grade C	GREEN - GREEN	BLUE - GREEN	BLUE - BLUE

Colour code on edge of bearing
Thickness progression:
GREEN - Thin
BLUE - Intermediate
RED - Thick

CAUTION: If two bearing colours are to be used, thicker bearing must be fitted to bearing ladder. When original crankshaft is to be refitted, bearing shells must be as selected from table, DO NOT FIT UNDERSIZE BEARINGS.

Main bearings type table

	1	2	3	4	5
Block	Plain	Grooved	Grooved	Grooved	Plain
Ladder	Plain	Plain	Plain	Plain	Plain

Big-end bearings selection

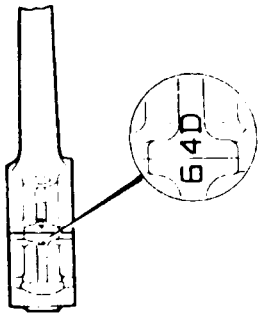

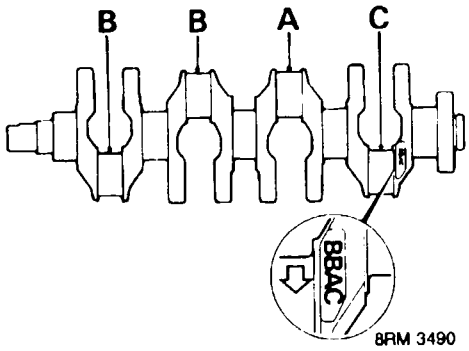

1. Record big-end journal code letters from crankshaft rear web.
   First letter is Number 1 big-end bearing.
   Record big-end bearing bore code numbers - this will be 5, 6 or 7 located on the connecting rod bearing cap.
2. Check crankshaft big-end journal diameters:
   - 1.1, 1.4 and 1.6 litre
   Big-end journal tolerance :
   Grade A = 43.000 to 43.007 mm
   Grade B = 42.993 to 43.000 mm
   Grade C = 42.986 to 42.993 mm
   Clearance in bearings = 0.021 to 0.049 mm
   Maximum out of round = 0.010 mm
   Big-end/connecting rod end-float = 0.10 to 0.25 mm

   1.8 litre
   Big-end journal tolerance:
   Grade A = 48.000 to 48.007 mm
   Grade B = 47.993 to 48.000 mm
   Grade C = 47.986 to 47.993 mm
   Clearance in bearings = 0.021 to 0.049 mm
   Maximum out of round = 0.010 mm
   Big-end/connecting rod end-float = 0.10 to 0.25 mm
3. Select the appropriate big-end bearing shells from the table.
4. Replace crankshaft if outside tolerance.

Big-end bearings size selection table

Big-end bore	Crankshaft big-end journals		
	Grade A	**Grade B**	**Grade C**
Grade 5	BLUE - BLUE	RED - BLUE	RED - RED
Grade 6	BLUE - YELLOW	BLUE - BLUE	RED - BLUE
Grade 7	YELLOW - YELLOW	BLUE - YELLOW	BLUE - BLUE

Colour code on edge of bearing
Thickness progression:
YELLOW - Thin
BLUE - Intermediate
RED - Thick
If two bearing colours are to be used, thicker bearing must be fitted to big-end bearing cap.

Crankshaft, main and big-end bearings - refit

1. Clean all sealant surfaces on block, bearing ladder and oil rail.
   Use foam action gasket remover and a plastic scraper - DO NOT USE A METAL SCRAPER ON SEALING SURFACES.
   Ensure all oilways are clear.
   Examine shoulder location on each big end bolt, renew if damaged.
   Check that core plug at each end of oil rail is in good condition, renew as necessary.

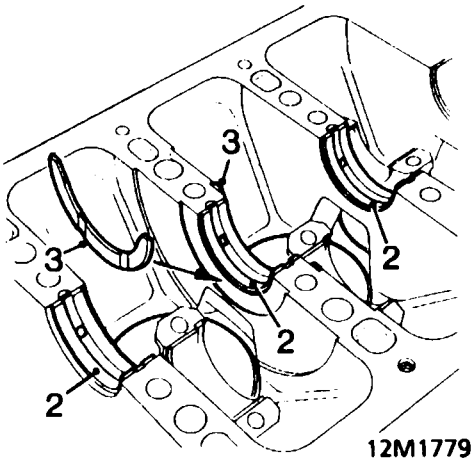

2. Fit selected main bearing shells into cylinder block and bearing ladder as indicated in the table.
3. Fit thrust washers into block, each side of Number 3 main bearing with oil grooves facing outwards.
4. Lubricate crankshaft main journals with engine oil. Hold crankshaft with big-end journals horizontal and using assistance, lower crankshaft on to main bearings.
5. Clean sealing surfaces on cylinder block and bearing ladder using suitable solvent.

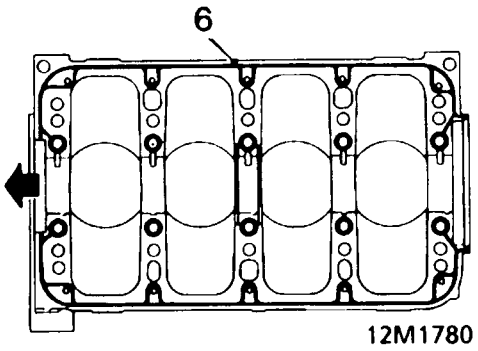

6. Apply a continuous bead of sealant, Part Number GUG 705963GM to paths shown on cylinder block then spread to an even film using a roller.

CAUTION: To avoid contamination, assembly should be completed immediately after application of sealant.

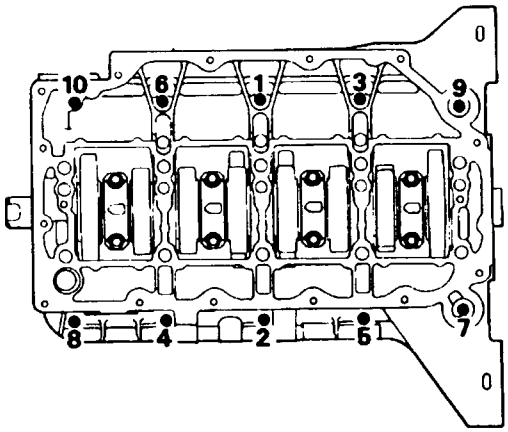

7. Lubricate main journals with engine oil. Fit bearing ladder to block, fit bolts ensuring that flanged head bolt is fitted at position 10. Tighten bolts in sequence shown to 5 Nm then in same sequence to 30 Nm.

CAUTION: With bearing ladder fitted, crankshaft will be tight; do not rotate crankshaft more than absolutely necessary until cylinder head bolts are tightened to the correct torque.

8. Fit cylinder liners and pistons.

CAUTION: Ensure that cylinder liner retainer clamps 18G 1736 and nylon nuts are fitted immediately cylinder liners are inserted into cylinder block.

9. Lubricate crankshaft big-end journals and bearing shells with engine oil. Carefully pull each connecting rod into place, fit big-end caps noting that featherways abut, fit and finger tighten dowel bolts in their original fitted order.
10. Tighten big-end dowel bolts in pairs to 20 Nm+ 45°.

NOTE: Until the cylinder head is fitted, crankshaft will prove difficult to rotate once big-end bolts are tightened.

11. Using feeler gauges, check that end-float of each big-end bearing/connecting rod is between 0.10 to 0.25 mm.

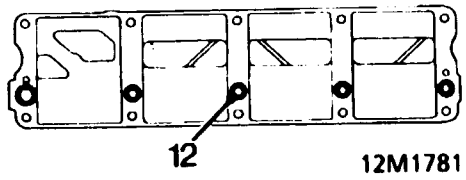

12. Apply continuous beads of sealant, Part Number GUG 705963GM to paths on oil rail as shown, then spread to an even film using a roller.

CAUTION: To avoid contamination, assembly should be completed immediately after application of sealant.

13. Using assistance, position cylinder block on its side and temporarily remove cylinder liner retainer clamps **18G 1736.**

CAUTION: Take care not to disturb cylinder liners with retainer clamps removed

14. Fit oil rail to bearing ladder, tighten nuts to 9 Nm.

CAUTION: A new oil rail together with a plastic suction pipe must be fitted if a thread for cylinder head bolts is damaged. Thread inserts (Helicoil) are not acceptable.

15. Fit cylinder retainer clamps **18G 1736,** screw bolts into oil rail and tighten sufficiently to retain clamps.
16. Lubricate a new 'O' ring with engine oil and fit to oil suction pipe.
17. Fit oil suction pipe, fit screws and tighten to 12 Nm.

CAUTION: Screws used must be M6 x 20.

Pressed steel sump

18. Clean inside and joint face of sump. Check condition of gasket, renew if damaged or showing signs of deterioration.
19. Fit gasket to sump, ensure its 7 pegs are fully located.

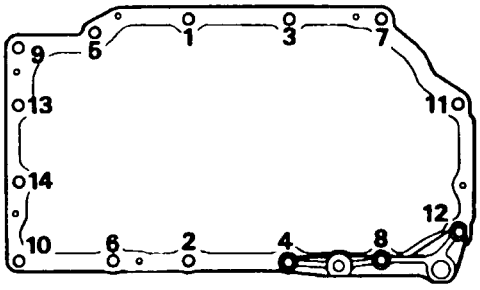

8RM 0054

20. Fit sump to bearing ladder, fit 11 new Patchlok bolts and using sequence shown, tighten to 5 Nm.

CAUTION: Early engines: M6 bolts
Later engines: M8 bolts

21. Fit anti-beaming bracket support, where fitted; fit and tighten 3 new M6 or M8 x 35 Patchlok bolts at positions 4, 8 and 12 to 5 Nm.
22. Progressively tighten sump bolts in sequence shown to:
    M6/M8 bolts: 10 Nm
23. Fit anti-beaming bracket where fitted, tighten bolt to 45 Nm.

Alloy sump

24. Clean sealing surface on sump flange using suitable solvent.

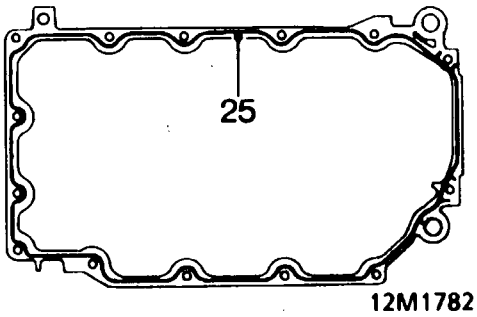

12M1782

25. Apply a 2 mm wide x 0.25 mm thick continuous bead of sealant, Part Number GUG 705963GM to sump flange as shown then spread to an even film using a roller.

CAUTION: To avoid contamination, assembly should be completed immediately after application of sealant. Do not use RTV or any sealant other than specified.

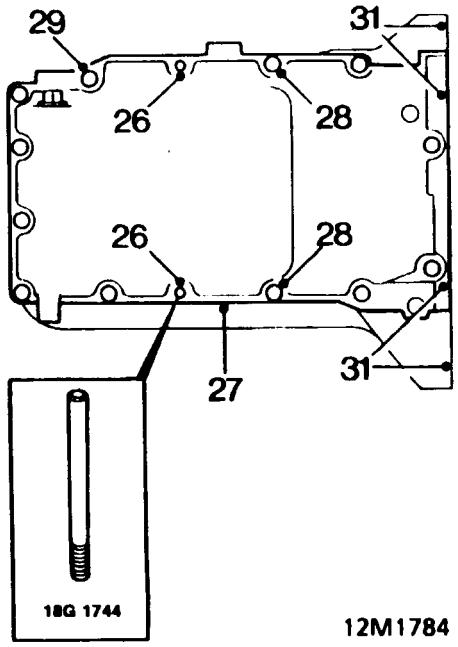

12M1784

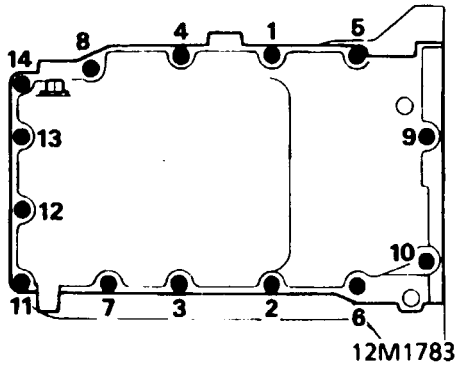

12M1783

26. Screw alignment pins **18G 1744** into holes shown.
27. Carefully lower sump over pins and on to bearing ladder.
28. Fit 2 bolts into holes shown, tighten to 4 Nm.
29. Fit 10 bolts into remaining holes, lightly tighten all bolts.

CAUTION: Ensure 2 M8 x 60 bolts are in original fitted positions.

30. Remove alignment pins **18G 1744**, fit and lightly tighten remaining 2 bolts.
31. Using a straight edge, check that machined face of sump flange is level with rear face of cylinder block. Check in 3 positions and if necessary, tap sump gently to re-position it.

32. Using sequence shown, tighten 14 bolts to:
M8 x 25 - 25 Nm
M8 x 60 - 30 Nm

All engines

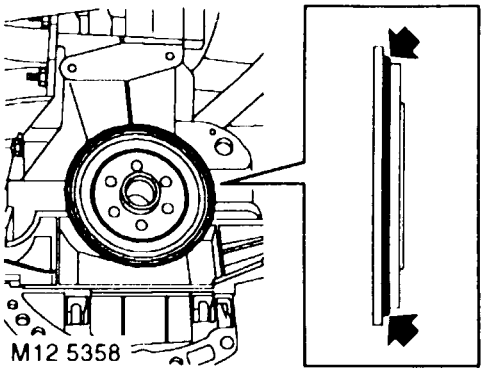

33. Apply a 1.5 mm continuous bead of sealant, Part No. GAC 8000 to replacement oil seal as shown.

CAUTION: Do not apply oil or grease to any part of oil seal or running surface of crankshaft. Seal must be fitted immediately after applying sealant.

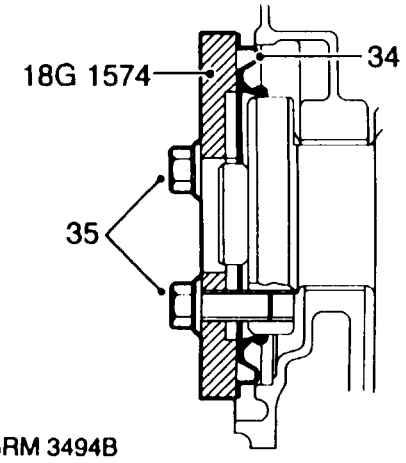

34. Position oil seal to cylinder block.
35. Fit oil seal replacer tool **18G 1574** to crankshaft, retain tool using 3 slave bolts.
36. Tighten bolts to press oil seal squarely into cylinder block.

NOTE: Do not remove replacer for one minute to allow seal to relax.

37. Remove tool **18G 1574.**

CAUTION: Allow sealant to cure for a minimum of 30 minutes before rotating crankshaft.

38. Fit flywheel.
39. Fit oil pump and front oil seal.
40. Fit crankshaft timing gear.
41. Fit cylinder head assembly, do not fit spark plugs at this stage.
42. Fit a new camshaft timing belt.
43. Clean joint surfaces. Use new gasket, dry and fit dipstick tube, tighten bolts to 10 Nm.

NOTE: Ensure bolts securing dipstick tube to bearing ladder are flanged head and do not exceed 12 mm in length.

44. Support engine and using a socket and suitable torque gauge on crankshaft pulley bolt, check that crankshaft can be rotated in a clockwise direction without undue binding, rotational torque should not exceed 31 Nm.
45. Fit spark plugs and tighten to 25 Nm.
46. After installation in vehicle, run engine at idle speed for 15 minutes before road testing.

PISTONS, RINGS & CYLINDER LINERS

Pistons and connecting rods - remove

1. Suitably identify each piston assembly with its respective cylinder liner.
2. Remove big-end bearings.
3. Using assistance, position cylinder block on its side.

CAUTION: Ensure that feet of cylinder liner retainer clamps 18G 1736 do not protrude over cylinder bores.

4. Remove ridge of carbon from top of each cylinder liner bore.
5. Push pistons to top of their bores.
6. Carefully push out each piston assembly taking care that big-ends do not contact surface of cylinder liners.
7. Refit caps on to connecting rods, lightly tighten dowel bolts.

CAUTION: Removal of pistons will necessitate removal and re-sealing of cylinder liners.

Piston rings - checking

1. Using an expander, remove and discard old piston rings.
2. Use squared off end of broken piston ring and clean ring grooves.
3. Check new ring to groove clearance:

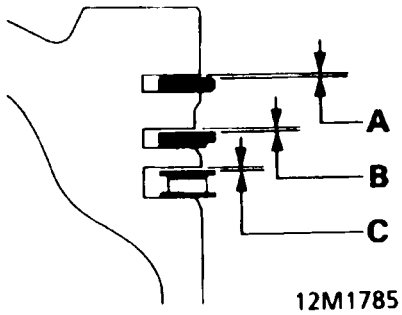

K8 and K16 - 1.1 and 1.4
Top compression ring - **A** = 0.04 to 0.08 mm
2nd compression ring - **B** = 0.03 to 0.062 mm
Oil control rails - **C** = 0.044 to 0.55 mm

K16 - 1.6 and 1.8
Top compression ring - **A** = 0.040 to 0.072 mm
2nd compression ring - **B** = 0.030 to 0.062 mm
Oil control rails -**C** = 0.010 to 0.180 mm

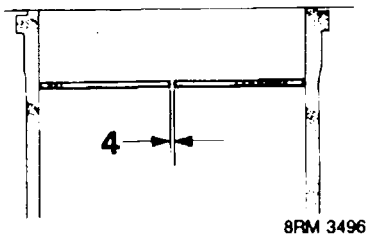

4. Check new ring fitted gap 20 mm from top of cylinder liner bore:

CAUTION: Ensure rings are kept square to liner bore and that they are suitably identified to the bore in which they are checked and fitted to the piston for that bore.

K8 and K16 - 1.1 and 1.4:
Top compression ring - = 0.17 to 0.37 mm
2nd compression ring - = 0.37 to 0.57 mm
Oil control rails = 0.15 to 0.40 mm

K16 - 1.6 and 1.8:
Top compression ring - = 0.20 to 0.35 mm
2nd compression ring - = 0.28 to 0.48 mm
Oil control rails = 0.15 to 0.40 mm

Pistons - inspection

1. Check pistons for distortion and cracks.
2. Measure and record piston diameter at right angle to gudgeon pin and 8 mm from bottom of skirt.
3. Check piston diameter with figures given.
4. Measure and record piston diameter in line with gudgeon pin hole and 8 mm from bottom of skirt.
5. Check piston ovality with figures given.
6. Repeat above procedures for remaining pistons.

K8 and K16 - 1.1 and 1.4:
Grade A = 74.940 to 74.955 mm
Grade B = 74.956 to 74.970 mm
Maximum ovality = 0.3 mm

K16 - 1.6 and 1.8:
Grade A = 79.975 to 79.990 mm
Grade B = 79.991 to 80.005 mm
Maximum ovality = 0.3 mm
Service pistons are grade A and B

NOTE: Piston grades A or B are stamped on crown of piston.

Piston to cylinder liner bore clearance - checking

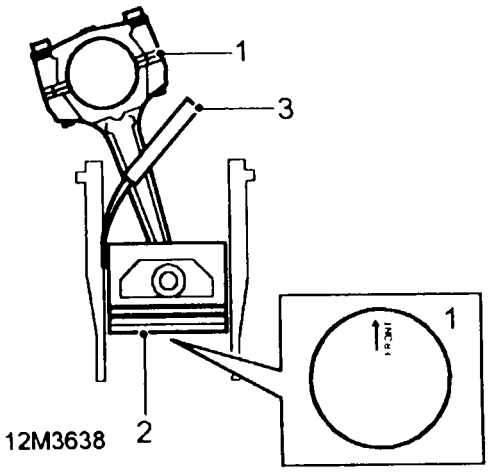

1. Starting with number 1 piston, invert piston and connecting rod and with word FRONT or arrow on piston crown facing towards REAR of cylinder block, insert piston in cylinder liner.
2. Position piston with bottom of skirt 30 mm from top of cylinder block.
3. Using feeler gauges, measure and record clearance between piston and left hand side of cylinder liner - viewed from front of cylinder block.
4. Repeat above procedure for remaining pistons.

Clearance in cylinder liner bore: K8 and K16 - 1.1 and 1.4
0.015 to 0.045 mm

K16 - 1.6 and 1.8
0.01 to 0.04 mm

NOTE: Pistons and connecting rods are only supplied as an assembly.

Piston rings - refit

CAUTION: Ensure that piston rings are fitted to piston for the cylinder bore in which they were checked.

1. Fit oil control spring.
2. With 'TOP' or identification markings to top of piston, use an expander to fit piston rings in sequence; oil control, 2nd and top compression.

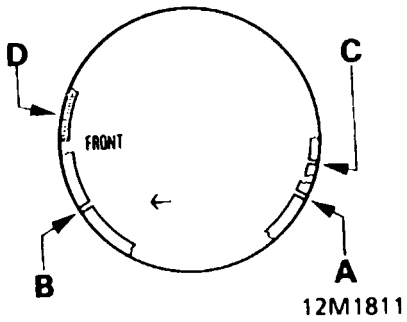

3. Ensure rings are free to rotate, position compression ring gaps **A** and **B** at 120° to each other and away from thrust side - left hand side of piston when viewed from front. Position oil control ring gap **C** and spring gap **D** at 30° on opposite side of gudgeon pin axis.

Cylinder liners - inspection

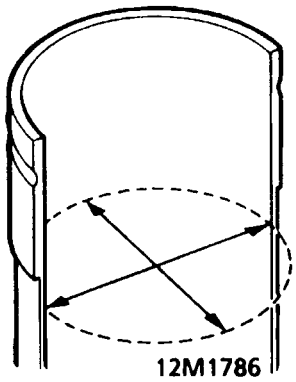

1. Measure wear and taper in two axes 65 mm from top of cylinder liner bore.

   1.1 and 1.4:
   RED grade A = 74.970 to 74.985 mm
   BLUE grade B = 74.986 to 75.000 mm

   1.6 and 1.8:
   RED grade A = 80.000 to 80.015 mm
   BLUE grade B = 80.016 to 80.030 mm
   Service liners are grade A and B.

   Cylinder liner grade A or B together with the appropriate colour code will be found marked on outside diameter of liner.

CAUTION: Cylinder liners with excessively glazed, worn, scratched or scored bores must be replaced, do not attempt to hone or remove glazing from bore.

Later 1.8 engines only

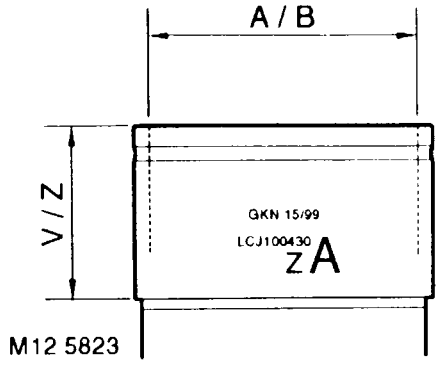

- **A/B - Cylinder liner bore/grade**
- **V/Z - Cylinder liner step height**

NOTE: Cylinder liners fitted to later 1.8 engines have their step heights graded on production. The step heights, V or Z together with the liner part number and colour code are marked on the outside diameter of the liner. If cylinder liner(s) are to be replaced, the replacement liner(s) must have the same step height as the original liner(s). Both step heights are available in red and blue grades of liner.

Cylinder liners - remove

1. Remove pistons.
2. Remove cylinder liner clamps **18G 1736.**
3. Using assistance, position cylinder block on its side.

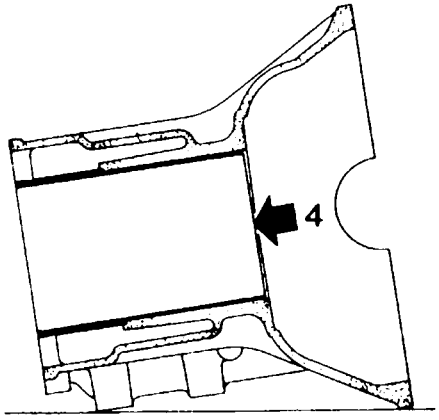

12M1787

CAUTION: If original cylinder liners are to be refitted, use a felt tipped pen to make suitable alignment marks between liner and cylinder block. Do not etch or stamp liners.

4. Using hand pressure, push cylinder liners out towards cylinder head face of cylinder block; remove liners.

CAUTION: Keep cylinder liners in their fitted order.

Cylinder liners - refit

NOTE: To enable cylinder liner retainer clamps to be fitted when liners are inserted in cylinder block, crankshaft and bearing ladder must be fitted.

1. Fit crankshaft and bearing ladder.
2. Using assistance, support cylinder block on 2 wooden blocks.
3. Remove sealant from cylinder block and if original cylinder liners are to be refitted, from shoulder of liners.
4. Clean cylinder liners and wipe dry.

CAUTION: Ensure that if original cylinder liners are to be refitted, reference marks made during dismantling are not erased.

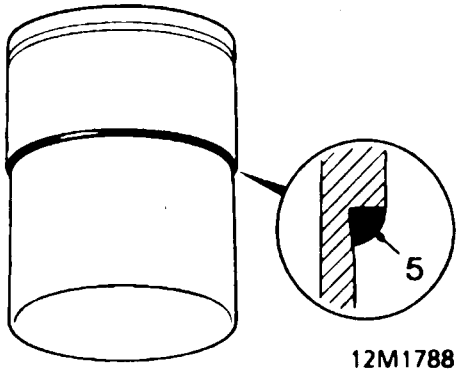

12M1788

5. Apply a 2.0 mm thick continuous bead of sealant from kit, Part Number GGC 102 around shoulder of cylinder liner.

CAUTION: Do not use any other type of sealant.

6. Keeping cylinder liner 'square' to cylinder block, push liner fully down until shoulder of liner seats against cylinder block. Do not drop liners into position.

CAUTION: If original cylinder liners are to be refitted, align reference marks made during dismantling before liner is pushed fully down.

7. Fit cylinder liner retainer clamps **18G 1736.**
8. Fit pistons.

Pistons and connecting rods - refit

1. Using assistance, support base of cylinder block on 2 wooden blocks.
2. Ensure that cylinder liner retainer clamps **18G 1736** are fitted and that feet of clamps do not protrude over cylinder liner bores.
3. Lubricate cylinder bores, pistons and rings with engine oil, ensure ring gaps are correctly spaced.
4. Fit selected bearing shells into big-end bearing caps and connecting rods.

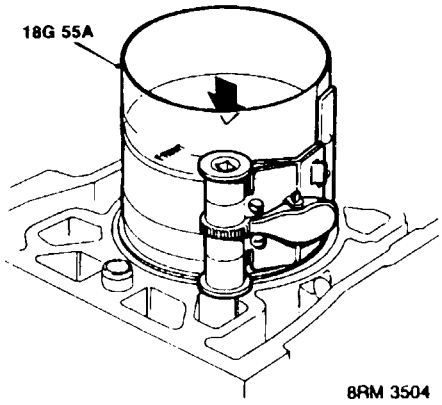

5. Fit ring clamp **18G 55A** to each piston in turn and with **'FRONT'** mark on piston to engine front, push piston into bore until flush with top face of cylinder liner.
   Remove ring clamp.

CAUTION: If original pistons are to be fitted, ensure that each piston is inserted in its correct cylinder liner. Do not push pistons below top face of cylinder liner until big-end bearings and caps are to be fitted.

6. Fit big-end bearings.

DATA

Oil pump

Outer rotor to housing clearance	0.28 to 0.36 mm
Inner rotor tip clearance	0.05 to 0.13 mm
Rotor end float	0.02 to 0.06 mm
Relief valve spring free length	38.9 mm

Cooling system

Thermostat starts to open	88° C
Nominal setting	85 to 91° C
Thermostat fully open	100° C

Camshafts

Camshaft end-float - K8 and K16 Non VVC engines:	0.06 to 0.19 mm
- Service limit	0.3 mm
Camshaft end-float - K16 VVC engines:	
Inlet	0.03 to 0.15
- Service limit	0.25 mm
Exhaust	0.06 to 0.19 mm
- Service limit	0.3 mm
Camshaft bearing clearance - K8 and K16 Non VVC engines:	0.060 to 0.094 mm
- Service limit	0.15 mm
Camshaft bearing clearance - K16 VVC engines:	
Inlet - 25 mm diameter journals	0.025 to 0.060
- Service limit	0.1 mm
Inlet - 40 mm diameter journals	0.03 to 0.07 mm
- Service limit	0.1 mm
Exhaust	0.060 to 0.094 mm
- Service limit	0.15 mm

Tappets

Tappet outside diameter	32.959 to 32.975 mm.

Cylinder head

Cylinder head maximum warp	0.05 mm
Cylinder head height:	
New	118.95 to 119.05 mm.
Reface limit	0.20 mm

Valve springs

K8 engines

Free length	46.2 mm
Fitted length	37.0 mm
Load - valve closed	255 ± 12 N
Load - valve open	535 ± 20 N

K16 Non VVC engines

Free length	50.0 mm
Fitted length	37.0 mm
Load - valve closed	250 ± 12 N
Load - valve open	450 ± 18 N at 28.8 mm

K16 VVC engines

Free length	47.6 mm
Fitted length	37.0 mm
Load - valve closed	210 ± 13 N
Load - valve open	440 ± 22 N

Valves

K8 engines

Valve stem diameter:	
Inlet	6.960 to 6.975 mm
Exhaust	6.952 to 6.967 mm
Valve guides:	
Inside diameter	7.000 to 7.025 mm
Valve stem to guide clearance:	
Inlet	0.025 to 0.065 mm
- Service limit	0.07 mm
Exhaust	0.033 to 0.073 mm
- Service limit	0.11 mm
Valve stem fitted height:	
New	38.95 to 40.81 mm
- Service limit	41.06 mm

K16 engines

Valve stem diameter:	
Inlet	5.952 to 5.967 mm
Exhaust	5.947 to 5.962 mm
Valve guides:	
Inside diameter	6.000 to 6.025 mm
Valve stem to guide clearance:	
Inlet	0.033 to 0.063 mm
- Service limit	0.07 mm
Exhaust	0.038 to 0.078 mm
- Service limit	0.11 mm
Valve stem fitted height:	
New	38.93 to 39.84 mm
- Service limit	40.10 mm

Valve guides

Fitted height:	
K8 engines	10.3 mm
K16 engines	6.0 mm

Valve seats

Angle	45°
Width	
Not triple angle valve seats :-	
Inlet and exhaust	1.5 mm
Triple angle valve seats :-	
Inlet	1.0 to 1.4 mm
Exhaust	1.4 to 1.8 mm
Valve face angle:	
Inlet	45°
Exhaust	45°

Crankshaft

Crankshaft end-float	0.10 to 0.25 mm
Service limit	0.34 mm
Thrust washer halves thickness	2.61 to 2.65 mm
Main journal tolerance - Type A crankshaft*	
Grade 1	47.993 to 48.000 mm
Grade 2	47.986 to 47.993 mm
Grade 3	47.979 to 47.986 mm
Clearance in bearings	0.02 to 0.05 mm
Maximum out of round	0.010 mm
Main journal tolerance - Type B crankshaft*	
Grade 1	48.000 to 48.007 mm
Grade 2	47.993 to 48.000 mm
Grade 3	47.986 to 47.993 mm
Clearance in bearings	0.013 to 0.043 mm
Maximum out of round	0.010 mm
Big-end journal tolerance - 1.1, 1.4 and 1.6 litre:	
Grade A	43.000 to 43.007 mm
Grade B	42.993 to 43.000 mm
Grade C	42.986 to 42.993 mm
Clearance in bearings	0.021 to 0.049 mm
Maximum out of round	0.010 mm
Big-end/connecting rod end-float	0.10 to 0.25 mm
Big end journal tolerance - 1.8 litre:	
Grade A	48.000 to 48.007 mm
Grade B	47.993 to 48.000 mm
Grade C	47.986 to 47.993 mm
Clearance in bearings	0.021 to 0.049 mm
Maximum out of round	0.010 mm
Big-end/connecting rod end-float	0.10 to 0.25 mm

* For commencing engine numbers for Types A and B crankshafts, see Information.

Piston rings
New ring to groove clearance:

K8 and K16 - 1.1 and 1.4

Top compression ring	0.04 to 0.08 mm
2nd compression ring	0.03 to 0.062 mm
Oil control rails	0.044 to 0.055 mm

K16 - 1.6 and 1.8

Top compression ring	0.040 to 0.072 mm
2nd compression ring	0.030 to 0.062 mm
Oil control rails	0.010 to 0.180 mm

Ring fitted gap 20 mm from top of bore:

K8 and K16 - 1.1 and 1.4

Top compression ring	0.17 to 0.37 mm
2nd compression ring	0.37 to 0.57 mm
Oil control rails	0.15 to 0.40 mm

K16 - 1.6 and 1.8

Top compression ring	0.20 to 0.35 mm
2nd compression ring	0.28 to 0.48 mm
Oil control rails	0.15 to 0.40 mm

Piston diameter

K8 and K16 - 1.1 and 1.4

Grade A	74.940 to 74.955 mm
Grade B	74.956 to 74.970 mm
Clearance in bore	0.015 to 0.045 mm
Maximum ovality	0.3 mm

K16 - 1.6 and 1.8

Grade A	79.975 to 79.990 mm
Grade B	79.991 to 80.005 mm
Clearance in bore	0.01 to 0.04 mm
Maximum ovality	0.3 mm

Cylinder block
Cylinder liner bore:

K8 and K16 - 1.1 and 1.4

RED grade A	74.970 to 74.985 mm
BLUE grade B	74.986 to 75.000 mm

K16 - 1.6 and l.8

RED grade A	80.000 to 80.015 mm
BLUE grade B	80.016 to 80.030 mm

TORQUE WRENCH SETTINGS

Air cleaner support bracket bolts	10 Nm
Alloy sump bolts*	
M8 x 25	25 Nm
M8 x 60	30 Nm
Bearing ladder to block bolts*	30 Nm
Big-end bolts	20 Nm + 45°
Blanking plate to camshaft carrier bolts:	
Not plug top coil ignition system:	25 Nm
Plug top coil ignition system:	
- Inlet camshaft	6 Nm
'- Exhaust camshaft	25 Nm
Camshaft carrier bolts*	10 Nm
Camshaft cover to carrier bolts*	10 Nm
Camshaft gear bolts:	
M8	35 Nm
M10	65 Nm
Camshaft sensor bolts - K16 engines	5 Nm
Coolant pump bolts*	10 Nm
Coolant rail to cylinder block bolts	25 Nm
Crankshaft pulley bolt	205 Nm
Cylinder head bolts:*	
All bolts	20 Nm
- Mark position of radial marks	
- Turn all bolts + 180°	
- Turn all bolts another + 180° align marks	
Dipstick tube bolts	10 Nm
Flywheel+	80 Nm
Fuel pump blanking plate nuts - K8	25 Nm
ht lead brackets - not plug top coil ignition	10 Nm
ht lead cover screws	5 Nm
Hydraulic control unit bolts - K16 VVC engines	25 Nm
Hydraulic control unit piston to rack screw++	9 Nm
Hydraulic control unit oil temperature transmitter	15 Nm
Hydraulic control unit spool valve nut - K16 VVC engines	26 Nm
Hydraulic control unit spool valve sleeve bolt - K16 VVC engines	12 Nm
Ignition coils to cylinder head - plug top coil ignition only	8 Nm
K16 VVC housing bolts	10 Nm
Multiplug bracket to camshaft carrier bolts - if fitted	10 Nm
Oil filter adapter bolts	12 Nm
Oil pump bolts* +	10 Nm
Oil rail nuts	9 Nm
Oil suction pipe to bearing ladder bolts	12 Nm
Oil temperature sensor to oil filter adapter - if fitted	17 Nm
Pressed steel sump bolts - M6/M8* +	10 Nm

* Tighten in sequence
\+ New Patchlok bolt(s) must be fitted
++ Use new screw supplied with seal kit

Rear timing belt backplate screws - K16 VVC engines:	
M5	6 Nm
M6	10 Nm
Rear timing belt cover screws - K16 VVC engines	10 Nm
Rear timing gear bolts - K16 VVC engines	35 Nm
RH engine mounting bracket bolts	45 Nm
Rotor arm screw	10 Nm
Spark plugs	25 Nm
Spark plug cover screws	10 Nm
Thermostat housing bolts - Alloy housing	10 Nm
Thermostat housing bolts - Plastic housing	8 Nm
Thermostat housing to cylinder block bolt	10 Nm
Timing belt tensioner bolt - Automatic tensioner+	25 Nm
Timing belt tensioner pulley Allen screw - Manual tensioner	45 Nm
Timing belt tensioner pulley backplate screw - Manual tensioner	10 Nm
Timing belt tensioner pillar bolt	25 Nm
Timing belt lower cover screws	9 Nm
Timing belt rear cover screws	9 Nm
Timing belt upper front cover screws	5 Nm

* Tighten in sequence
\+ New Patchlok bolt(s) must be fitted
++ Use new screw supplied with seal kit

SERVICE TOOLS

18G 55A	Piston Ring Clamp
18G 1299A	K16 VVC Housing Oil Seal Remover
18G 1299A-1	Centre Bolt
18G 1519	Valve Lifter Basic Tool
18G 1519/1	Valve Lifter Adaptor
18G 1570	Camshaft Locking Tool
18G 1571	Flywheel Locking Tool - Flywheel Not Fitted With Reluctor Ring
18G 1574	Crankshaft Rear Oil Seal Replacer Tool
18G 1576/1	Valve Guide Remover/Replacer
18G 1576-2	Depth Gauge - All K16 Engines
18G 1576-3	Nylon Guide
18G 1576-4	Depth Gauge - K8 Engines
18G 1577	Valve Stem Oil Seal Remover/Replacer
18G 1587	Crankshaft Front Oil Seal Replacer
18G 1604A	K16 VVC Housing Oil Seal Replacer
18G 1674	Flywheel Locking Tool - Flywheel Fitted With Reluctor Ring
18G 1736	Cylinder Liner Retainer Clamps
18G 1744	Sump Alignment Pins - 2 off
18G 1769A	Camshaft Front And Rear Oil Seal Replacer
18G 1770	Camshaft Clamp - K16 VVC Engines
18G 1770/1	Timing Plate - Front Inlet Camshaft - K16 VVC Engines
18G 1770/2	Timing Plate - Rear Inlet Camshaft - K16 VVC Engines
18G 1749	Camshaft Oil Seal Protection Sleeve
18G 1771	Valve Guide Reamer - All K16 Engines
18G 1772	Valve Guide Reamer - K8 Engines
MS 120-6	Valve Seat Cutter Pilot
MS 76-111	60° Valve Seat Cutter
MS 76-120	15° Valve Seat Cutter
MS 76-122	45° Valve Seat Cutter
12-182	Camshaft Holding Tool

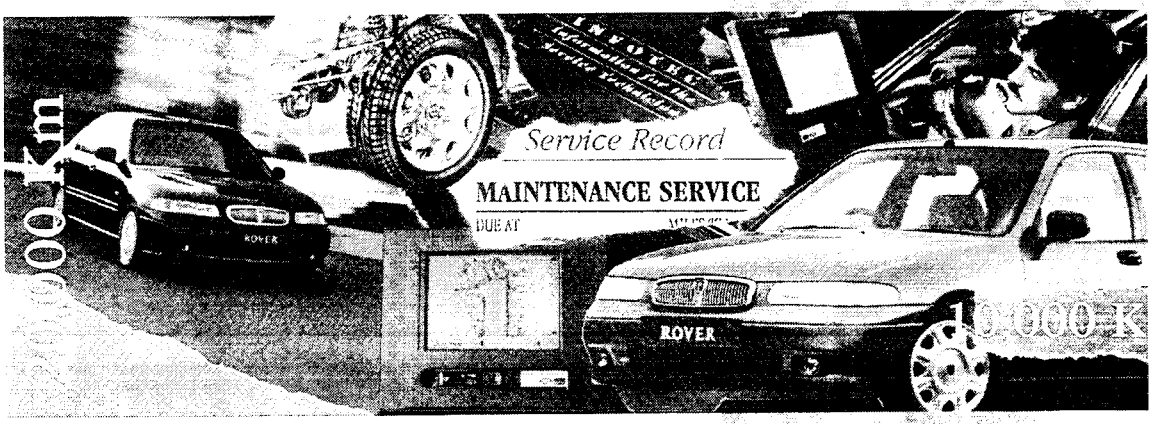

PG1 Manual Gearbox Overhaul Manual

PG1 Handgeschakelde versnellingsbak revisiehandboek

PG1 Boîte de vitesses manuelle Manuel de révision

PG1 Schaltgetriebe Überholungsanleitung

PG1 Cambio meccanico Manuale di revisione

PG1 Caja de cambios manual Manual de revisión

PG1 Caixa de velocidades manual Manual de revisão

ROVER

RCL 0124

PG1 MANUAL GEARBOX

OVERHAUL MANUAL

This gearbox is fitted to the following models:-

Rover 218/418 Diesel
New Rover 200 Diesel
New Rover 218
New Rover 400 Diesel
Rover 220
Rover 420
Rover 600 Diesel
Rover 600 Ti
Rover 820
Rover 800 KV6
MG-F

Publication Part No. RCL 0124 ENG (2nd edition)
Published by Rover Technical Communication
© 1997 ROVER GROUP LIMITED

INTRODUCTION

How to use this manual

To assist in the use of this manual the section title is given at the top and the relevant sub-section is given at the bottom of each page.

This manual contains procedures for the overhaul of the gearbox on the bench with the engine removed. For all other information regarding General Information, Adjustments, Removal of oil seals, gearbox unit, consult the Repair Manual for the model concerned.

This manual is divided into 3 sections, Description and Operation, Overhaul and Data, Torque & Tools. To assist filing of revised information each sub-section is numbered from page 1.

The individual overhaul items are to be followed in the sequence in which they appear. Items numbered in the illustrations are referred to in the text.

Overhaul operations include reference to Service Tool numbers and the associated illustration depicts the tool. Where usage is not obvious the tool is shown in use. Operations also include reference to wear limits, relevant data, torque figures, and specialist information and useful assembly details.

WARNINGS, CAUTIONS and Notes have the following meanings:

WARNING: Procedures which must be followed precisely to avoid the possibility of injury.

CAUTION: Calls attention to procedures which must be followed to avoid damage to components.

NOTE: Gives helpful information.

References

With the engine and gearbox assembly removed, the crankshaft pulley end of the engine is referred to as the front.

Operations covered in this manual do not include reference to testing the vehicle after repair. It is essential that work is inspected and tested after completion and if necessary a road test of the vehicle is carried out particularly where safety related items are concerned.

Dimensions

The dimensions quoted are to design engineering specification with Service limits where applicable.

REPAIRS AND REPLACEMENTS

When replacement parts are required it is essential that only Rover recommended parts are used.

Attention is particularly drawn to the following points concerning repairs and the fitting of replacement parts and accessories.

Safety features and corrosion prevention treatments embodied in the car may be impaired if other than Rover recommended parts are fitted. In certain territories, legislation prohibits the fitting of parts not to the manufacturer's specification.

Torque wrench setting figures given in this Manual must be used. Locking devices, where specified, must be fitted. If the efficiency of a locking device is impaired during removal it must be renewed.

The Terms of the vehicle Warranty may be invalidated by the fitting of other than Rover recommended parts. All Rover recommended parts have the full backing of the vehicle Warranty.

Rover Dealers are obliged to supply only Rover recommended parts.

SPECIFICATION

Rover are constantly seeking to improve the specification, design and production of their vehicles and alterations take place accordingly. While every effort has been made to ensure the accuracy of this Manual, it should not be regarded as an infallible guide to current specifications of any particular component or vehicle.

This Manual does not constitute an offer for sale of any particular component or vehicle. Rover Dealers are not agents of Rover and have no authority to bind the manufacturer by any expressed or implied undertaking or representation.

Gearbox identification

This overhaul manual is applicable to PG1 gearboxes having the following Serial No. prefixes:

C4BP	R4A0
C4BS	R4DT
C6BN	S4DTU
C6BP	S4EM
C6BS	S4FTU
S6BSU	S6AO
C6DTUT	S6BN
C6DTUTH	S6BNU
C6DUTH	S6BS
C6FTUT	S7EMU
K4BS	V4DT
K4BX	V6BS
K6AO	W4DT
K6BN	W4DTUT
K6BS	Y4AO
K7BSUT	
K7BX	
M5BS	

CONTENTS

Page

DESCRIPTION AND OPERATION

GEARBOX COMPONENTS 3
SECTIONED VIEW OF GEARBOX 4
DESCRIPTION 5
DESCRIPTION - TORSEN DIFFERENTIAL 5
OPERATION 5
OPERATION - TORSEN DIFFERENTIAL 6
DESCRIPTION - REVERSE BRAKE 8
OPERATION - REVERSE BRAKE 9

OVERHAUL

GEARBOX DISMANTLING 1
COMPONENT DISMANTLING 8
Input Shaft 8
Output Shaft 8
Synchro assemblies 9
Selector shafts 11
5th/Reverse Selector - with reverse brake 11
Interlock Assembly 12
Differential Assembly 12
INSPECTING COMPONENTS 13
Input and Output Shaft Assemblies 13
Reverse Idler Shaft and Gear 14
Synchro Assemblies 14
Selector Shafts and Forks 15
Interlock Assembly 16
Differential Assembly 17
Differential Housing 17
COMPONENT ASSEMBLING 19
Differential 19
Synchro Assemblies 19
Selector Shafts 20
Reverse Idler Gear and Shaft 20
Input Shaft 20
Output Shaft 22
Input Shaft End thrust - Check and Adjust 24
Differential Pinion Gear Backlash - Check and Adjust 25
Differential Bearing Pre-load - Check and Adjust 26
GEARBOX ASSEMBLING 27

DATA, TORQUE & TOOLS

DATA 1
TORQUE SETTINGS 2
TOOL NUMBERS 2

This page is intentionally left blank

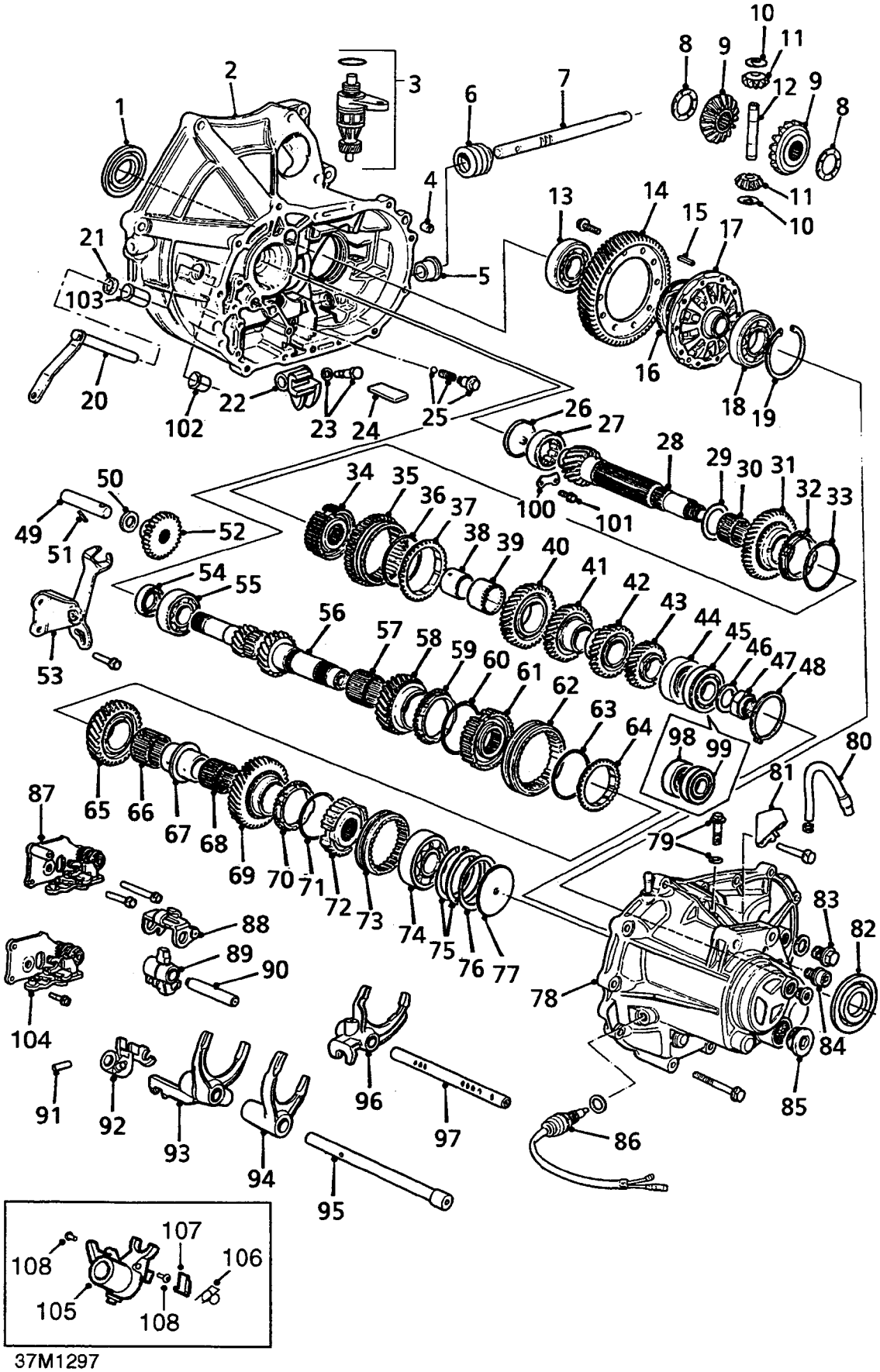
1
2
3
4
5
6
7
8
9
10
11
12
13
14
15
16
17
18
19
20
21
22
23
24
25
26
27
28
29
30
31
32
33
34
35
36
37
38
39
40
41
42
43
44
45
46
47
48
49
50
51
52
53
54
55
56
57
58
59
60
61
62
63
64
65
66
67
68
69
70
71
72
73
74
75
76
77
78
79
80
81
82
83
84
85
86
87
88
89
90
91
92
93
94
95
96
97
98
99
100
101
102
103
104
105
106
107
108
37M1297

GEARBOX COMPONENTS

1. Oil seal - differential
2. Differential housing
3. Speedometer drive pinion and housing
4. Dowel
5. Oil seal - selector shaft
6. Boot
7. Selector shaft
8. Thrust washer - sun gear
9. Sun gear
10. Thrust washer - planet gear
11. Planet gear
12. Pinion shaft
13. Ball bearing - differential
14. Final drive gear
15. Roll pin - differential pinion shaft
16. Speedometer drive gear
17. Differential casing
18. Ball bearing - differential
19. Selective shim
20. Clutch release shaft
21. Oil seal - clutch release shaft
22. Selector shaft guide
23. Dowel bolt and washer
24. Magnet
25. Detent cap bolt, ball and spring - selector shaft
26. Oil guide plate
27. Parallel roller bearing - output shaft
28. Output shaft
29. Selective thrust washer - 1st gear end float
30. Needle roller bearing - 1st gear
31. 1st gear
32. Synchro ring - 1st gear
33. Synchro spring
34. Synchro hub - 1st/2nd gear
35. Synchro sleeve - 1st/2nd gear
36. Synchro spring
37. Synchro ring - 2nd gear
38. Selective collar - 2nd gear end float
39. Needle roller bearing - 2nd gear
40. 2nd gear
41. 3rd gear
42. 4th gear
43. 5th gear
44. Ball bearing - output shaft
45. Ball bearing - output shaft
46. Tongued washer
47. Output shaft nut - L.H. thread
48. Circlip
49. Reverse idler shaft
50. Thrust washer - reverse idler gear
51. Roll pin - reverse idler shaft
52. Reverse idler gear
53. Reverse selector fork
54. Oil seal - input shaft
55. Ball bearing - input shaft
56. Input shaft
57. Needle roller bearing - 3rd gear
58. 3rd gear
59. Synchro ring - 3rd gear
60. Synchro spring
61. Synchro hub - 3rd/4th gears
62. Synchro sleeve - 3rd/4th gears
63. Synchro spring
64. Synchro ring - 4th gear
65. 4th gear
66. Needle roller bearing - 4th gear
67. Distance collar - 4th/5th gears
68. Needle bearing - 5th gear
69. 5th gear
70. Synchro ring - 5th gear
71. Synchro spring - 5th gear
72. Synchro hub - 5th gear
73. Synchro sleeve - 5th gear
74. Ball bearing - input shaft
75. Selective snap rings - input shaft end thrust
76. Belleville washer - input shaft end thrust
77. Oil guide plate
78. Gearbox casing
79. Reverse idler shaft bolt and washer
80. Breather pipe
81. Breather pipe bracket
82. Oil seal - differential
83. Filler/level plug
84. Drain plug
85. Access plug - output shaft bearing circlip
86. Reverse light switch
87. Interlock assembly - early gearboxes
88. Gearshift holder
89. Gearshift arm guide
90. Shift shaft
91. Roll pin - 5th/reverse gear selector
92. Gear selector - 5th/reverse gears
93. Selector fork - 3rd/4th gears
94. Selector fork - 5th gear
95. Selector shaft - 5th/reverse gears
96. Selector fork - 1st/2nd gears
97. Selector shaft - 1st/2nd gears
98. Bearing - roller **
99. Bearing - ball **
100. Retainer plate - output shaft bearing **
101. Retainer plate bolts - Patchlok **
102. Clutch release shaft bush - inner
103. Clutch release shaft bush - outer
104. Interlock assembly - later gearboxes
105. Gear selector - 5th/reverse gears/with reverse brake*
106. Spring - reverse brake*
107. Lock plate - reverse brake*
108. Taptite screws - reverse brake*

* Gearboxes with reverse brake fitted

** Fitted to gearboxes having the letter U in the gearbox serial number prefix

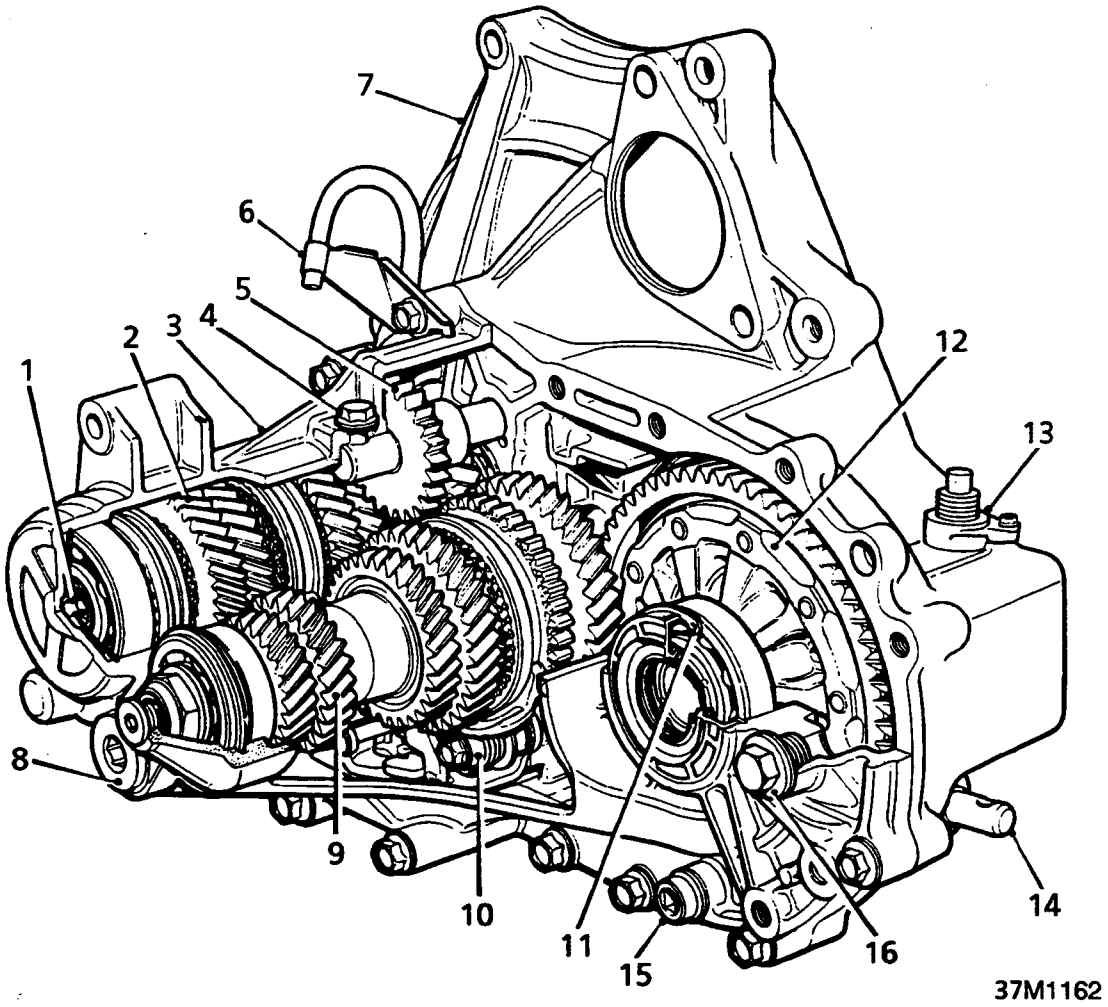

SECTIONED VIEW OF GEARBOX

1. Oil guide plate
2. Input shaft assembly
3. Gear case
4. Reverse idler shaft bolt
5. Reverse idler gear
6. Breather pipe and bracket
7. Differential housing
8. Access plug - output shaft bearing circlip
9. Output shaft assembly
10. Shift arm assembly and interlock
11. Selective shim
12. Final drive assembly
13. Speedometer drive pinion housing
14. Selector shaft
15. Oil drain plug
16. Oil filler/level plug

DESCRIPTION

The 5 speed constant mesh gearbox employs single helical gears for speed transmission and final drive. The input shaft carries the primary input gear, reverse pinion, 2nd gear and 3rd, 4th and 5th gear synchromesh hubs and idler gears. It is supported by two ballraces. End float is controlled by selective circlips and a Belleville washer. Its short input end eliminates the need for support in the engine crankshaft. The output shaft carries the final drive pinion, 1st idler gear, 1st and 2nd synchromesh hubs, 2nd speed idler gears and 3rd, 4th and 5th gears. The shaft is supported in the differential housing by a parallel roller bearing and depending on application, is supported in the gearcase by either a double ballrace or a single ballrace and roller bearing. Pinion location is controlled by a selective washer. The rear end of the shaft is secured by a circlip which retains the bearings in the gear case. Synchromesh is by spring rings and spline extensions in the inner faces of the synchromesh sleeves. Gear selection is via an interlock and gearshift holder assembly which transmits movement of the main selector shaft to the selector forks. Later specification gearboxes employ a reverse brake mechanism. Lubrication is by splash. An oil gutter located on the upper side of the gear case collects splashed oil and directs it to oil guide plates which distribute it to the hollow input and output shafts.

DESCRIPTION - TORSEN DIFFERENTIAL

Gearboxes fitted to certain models incorporate a 'Torsen' limited slip differential. The word 'Torsen' is derived from torque sensing which describes the principle of operation.

Two types of differential are fitted, type A is fitted to gearboxes having serial number prefixes K4BX and K7BSUT. Type B is fitted to gearboxes having serial number prefixes C6FTUT; W4DTUT; C6DTUT and C6DTUTH.

Type A

The assembly comprises a final drive gear bolted to the differential casing; two helical gears splined to the drive shafts and three pairs of element gear assemblies arranged at 120°intervals within the differential casing and running at right angles to the helical gears. Each of the element gear assemblies comprises a worm gear and two spur gears running on a journal pin. The worm gears are in constant mesh with the helical gears and the spur gears mesh with those of the adjoining element gear assembly. Axial thrust of the helical gears is controlled by a combination of thrust washers and needle roller bearings located at each end of and between the two gears.

Type B

The assembly comprises a final drive gear bolted to the differential casing two helical side gears splined to the drive shafts and four pairs of element gear assemblies arranged at ninety degree intervals within the differential casing and running parallel to the side gears. Each of the element gear assemblies comprises two helical gears of unequal length, the long gears are in constant mesh with the helical side gears splined to the drive shafts and also with the short gears of the adjoining element. Axial thrust of the helical side gears is controlled by thrust washers located between the end of each gear and the differential casing and by a thrust washer and friction washer located between the two gears.

OPERATION

With the exception of reverse all gears are in constant mesh. Forward ratios are obtained by locking a gear to its shaft using its individual synchronizer hub and sleeve. Reverse gear is obtained by engaging reverse idler gear with the reverse gears changing the direction of rotation of the output shaft. When a forward gear is selected the synchronizer sleeve presses the synchromesh female cone into contact with a corresponding male cone in the gear chosen. This synchronizes the speeds of the synchronizer hub and gear. The synchronizer sleeve then engages the gear and by means of a spring ring, teeth extensions on the synchronizer sleeve and detents in the selector shaft holds the selected gear in engagement. Torque is transmitted from the input shaft through the selected gear to the output shaft pinion and final drive gear to the drive shafts.

OPERATION - TORSEN DIFFERENTIAL

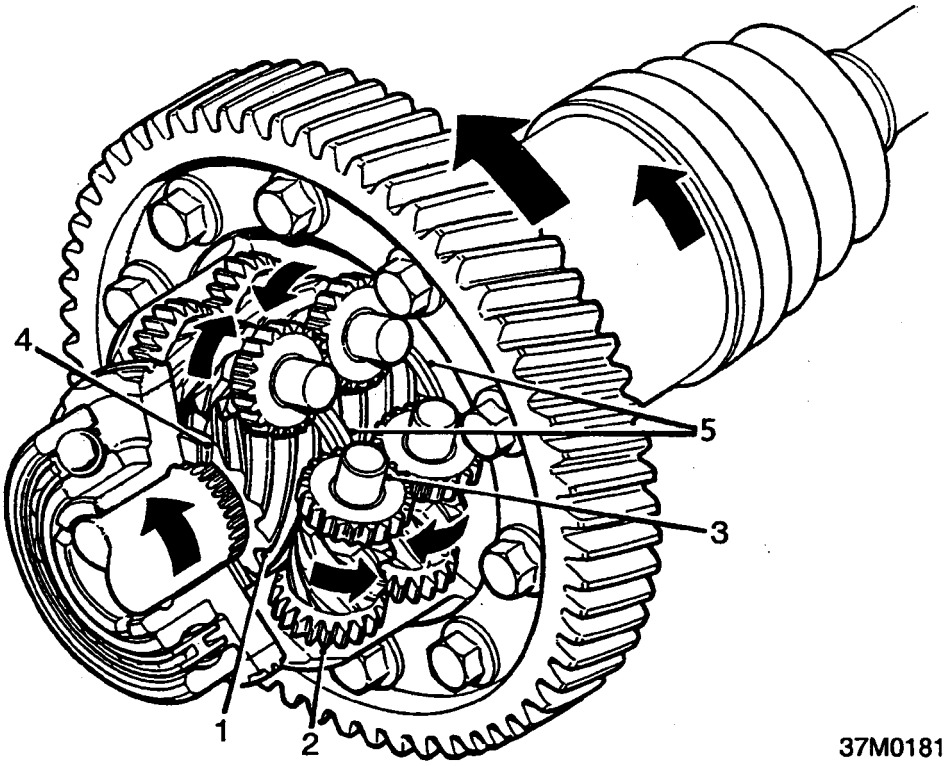

Torsen differential - Type A - Serial number prefixes K4BX and K7BSUT

1. Helical side gear
2. Element gear assembly - worm and spur gears
3. Journal pin
4. Thrust washer and spacing washer
5. Two thrust washers and needle roller bearing

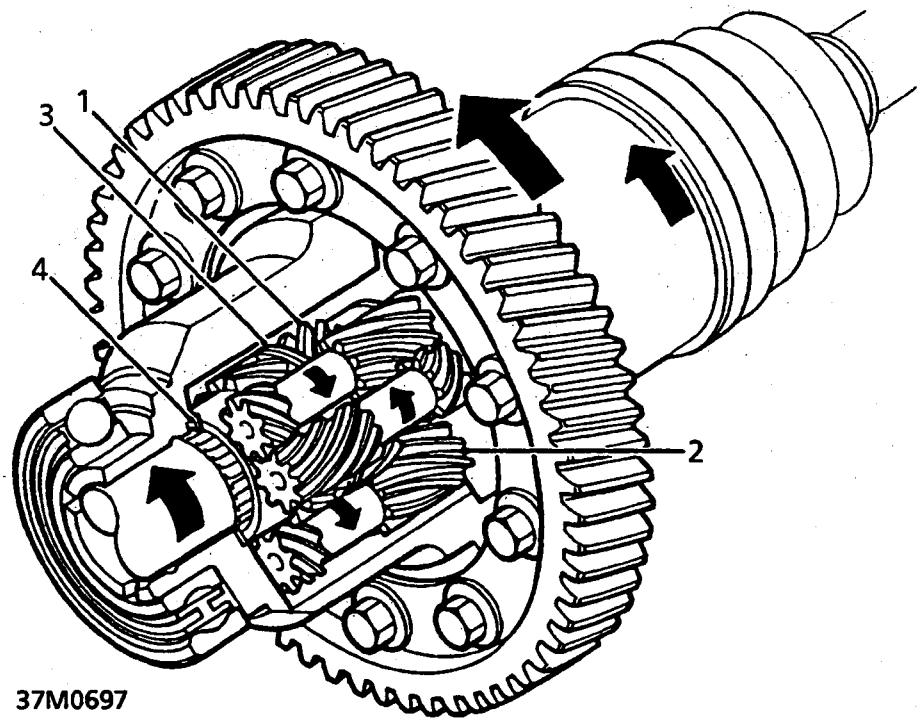

Torsen differential - Type B - Serial number prefixes C6FTUT; W4DTUT; C6DTUT and C6DTUTH

1. Helical side gear
2. Element gear assembly - helical gears
3. Friction washers
4. Thrust washers

Unlike a conventional limited slip differential, the torque sensing differential does not rely on the locking value of friction discs but by the friction produced by the teeth of the two helical side gears splined to the drive shafts meshing with the gears of the element gear assemblies. On Type A differentials, additional locking values are generated by the thrust washers and needle roller bearings located at each end of and between the side gears; whilst on Type B differentials, a combination of thrust washers and friction washers is used.

When both front wheel speeds are equal, then the frictional loads imposed by the element gears on the side gears are also equal. However, when the drive resistance on a road wheel is reduced through loss of traction then a torque imbalance is created; less torque being required to turn the wheel with the highest speed. This torque imbalance is sensed by the differential and results in a lowering of the friction imposed by the element gears on the side gear driving that particular wheel. This causes a reduction in wheel speed until a point is reached where traction is restored, the torque required to turn both wheels is equal and both wheels are rotating at the same speed.

DESCRIPTION - REVERSE BRAKE

A reverse brake mechanism has been introduced to the PG-1 gearbox, and is operated by the selector fork mechanism, which stops the input shaft from rotating prior to the engagement of reverse gear and provides a quiet and smooth engagement of reverse gear, providing the vehicle is stationary.

The reverse brake utilizes the 3rd/4th synchro hub for its operation. The 5th/reverse shift piece, which is secured to the selector shaft by a roll pin, and incorporates two guide lugs with two machined grooves that form a platform for a lock plate. The inner face of the lock plate is angled approximately at 45°, with two machined flanges either side of the lock plate which are positioned in machined grooves in the guide lugs. A return spring, which biases the lock plate against the stop surface, extends along the step at the front of the lock plate, with the two free ends of the spring held in position by two 'Taptite' screws either side of the shift piece. A lug on the 3rd/4th selector fork has a machined face at an angle of 45°which acts as a ramp when in contact with the angled face of the lock plate. 1st/2nd selector shaft has a machined abutment surface located below the detent grooves, the abutment surface being the area of contact for the lock plate.

OPERATION - REVERSE BRAKE

When selecting reverse gear, the 5th/reverse shift piece (1) moves upwards, and the angled face of the lock plate (3) contacts the ramp of 3rd/4th selector fork (2). The upward movement carries the lock plate (3) outwards until it contacts the abutment (4) on 1st/2nd selector shaft. From this point, continued upward movement of the 5th /reverse shift piece (1) causes the lock plate (3) to move the 3rd/4th selector and synchro sleeve (5) towards 4th gear. The movement of the 3rd/4th synchro sleeve (5) is sufficient to restrain the input shaft (6), thus permitting smooth engagement of reverse gear.

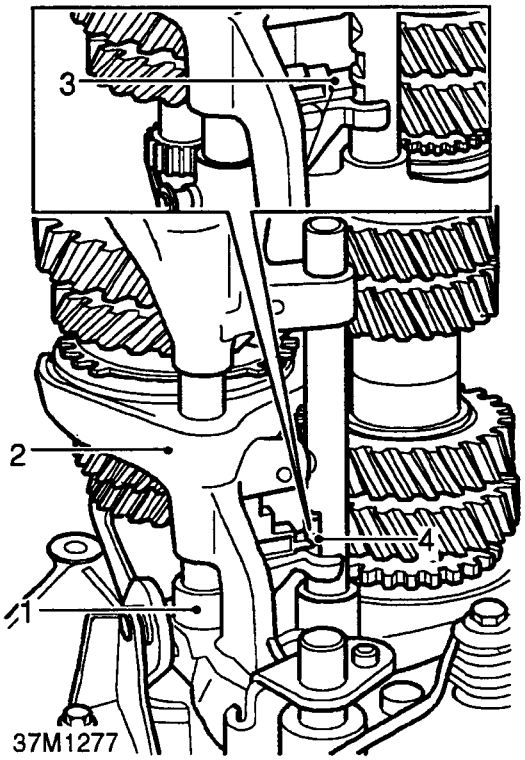

To prevent any further movement of the 3rd/4th synchro sleeve (5) and engagement of 4th gear, the spring on the lock plate (3) moves the lock plate into the machined groove (7) above the abutment (4).

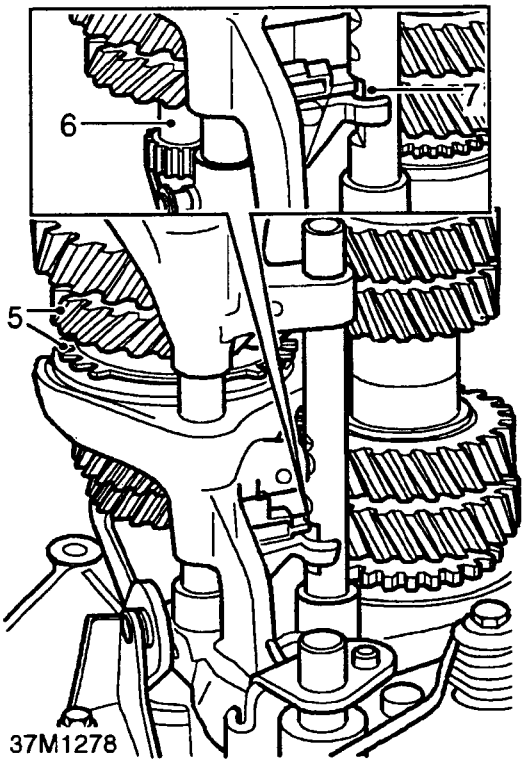

Selector shafts

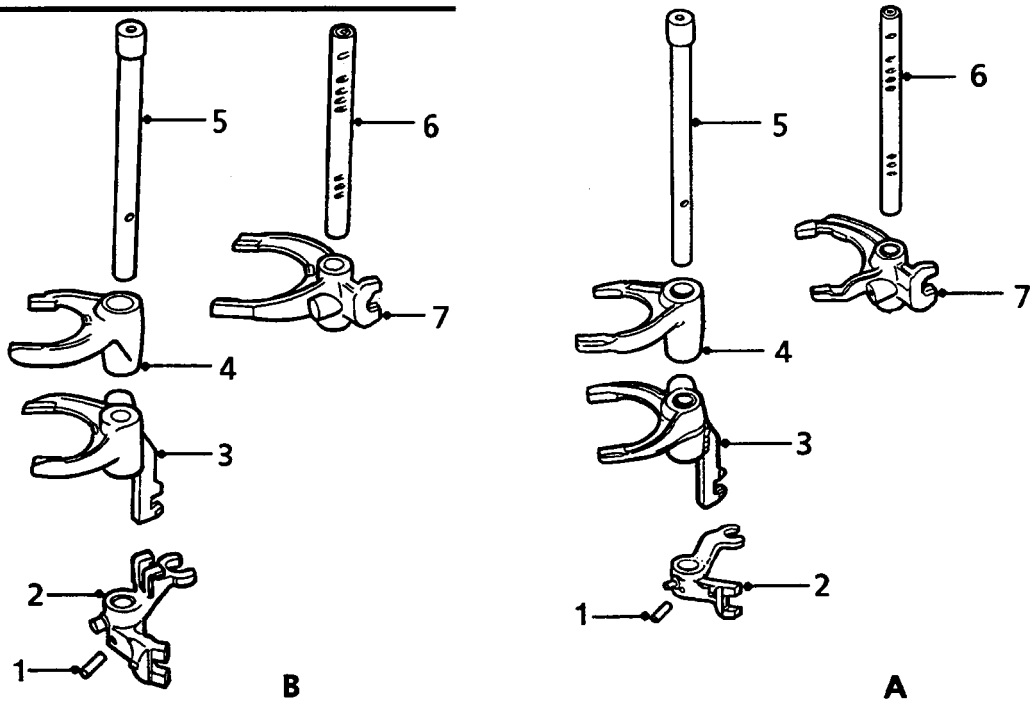

37M1147

Selector Shaft Components

1. Roll pin
2. 5th/reverse gear selector
3. 3rd/4th gear selector fork
4. 5th gear selector fork
5. 5th/reverse selector shaft
6. 1st/2nd gear selector fork
7. 1st/2nd selector shaft

CAUTION: Two types of selector shaft assemblies have been fitted. Type A selectors are manufactured from cast steel whilst type B are manufactured from aluminium bronze and are gold in colour. Do not interchange selector forks or shafts between type A and B assemblies.

1. Identify each selector fork and its fitted position to the relevant selector shaft. Slide 1st/2nd gear selector fork off 1st/2nd selector shaft.
2. Slide 1st/2nd selector shaft out of 5th gear selector fork and 5th/reverse gear selector.
3. Using a suitable punch, remove roll pin securing 5th/reverse gear selector; discard roll pin.
4. Slide 5th/reverse gear selector off 5th/reverse selector shaft.
5. Slide 3rd/4th and 5th selector forks off 5th/reverse selector shaft.

5th/Reverse Selector - with reverse brake

The 5th/reverse selector (1) is secured to the selector shaft by a roll pin (2). The selector incorporates the components for the reverse brake operation. This comprises of a lock plate (3) a retaining spring (4). The spring retains the lock plate in position, with The two ends of the spring located under two 'Taptite' screws (5) which are positioned either side of the 5th/reverse selector.

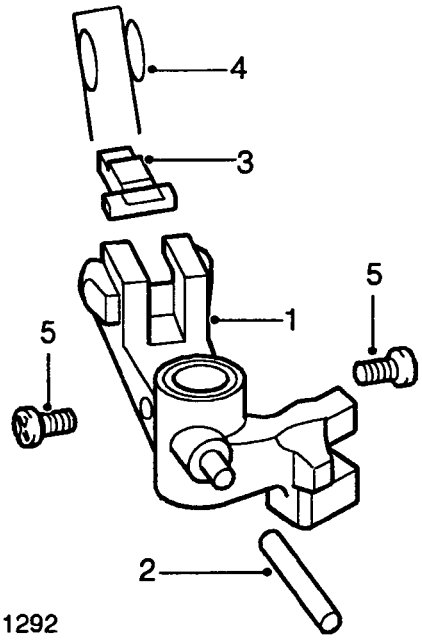

37M1292

Interlock Assembly

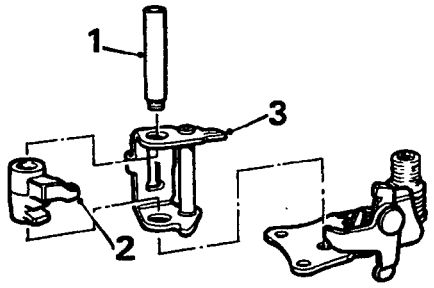

37M1165

NOTE: A modified interlock assembly having 2 springs has been introduced; this assembly may be fitted as a replacement to early gearboxes.

1. Withdraw shift shaft from gearshift holder and arm guide.
2. Release lug on arm guide from slot in interlock.
3. Slide gearshift holder off arm guide.

Differential Assembly

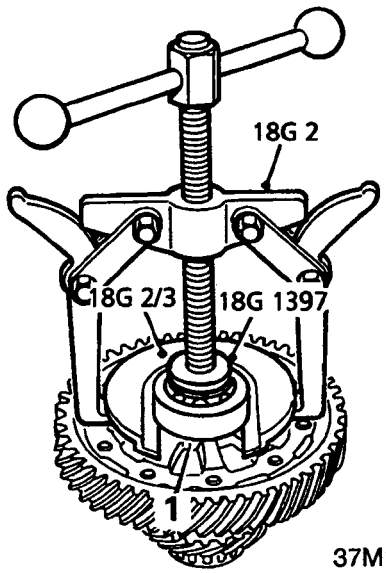

37M1151

1. Remove bearings using tools **18G 2, 18G 2/3** and **18G 1397**; discard bearings.

Differential Assembly

1. Check gear teeth for wear, chipping and signs of overheating.

CAUTION: It is not possible to overhaul Torsen differentials. Replace complete assembly if any of the above are apparent.

Torsen differential

2. Check speedometer drive gear for damage, replace if necessary.

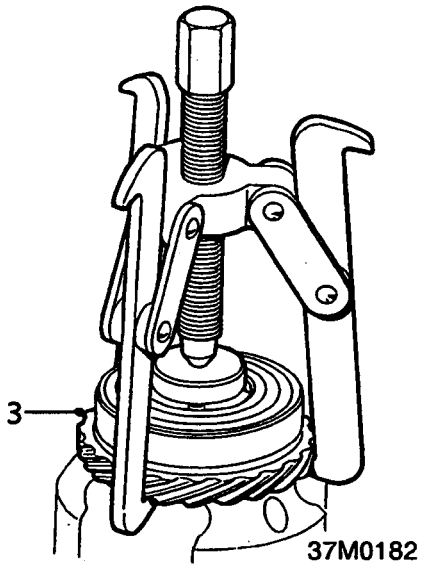

3. Remove speedometer drive gear using a suitable three legged puller and thrust button.

Standard differential

4. Check pinion shaft for wear.
5. Check speedometer drive gear teeth for wear or damage, replace as necessary.

Differential Housing

1. Check housing for damage, check that locating dowels are fitted; check clutch release shaft bushes for damage or wear and that shaft is free to turn, replace if necessary using the following procedure.

Remove

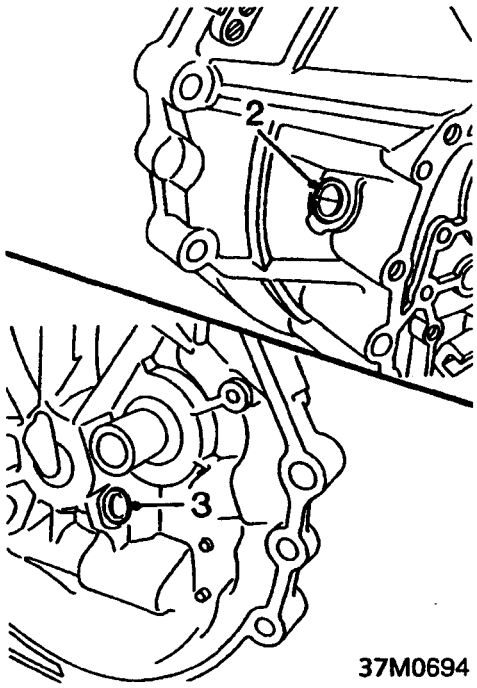

2. *Outer bush:* Using a hacksaw blade, carefully cut a longitudinal slot opposite the split in the bush; prise bush out of differential housing.
3. *Inner bush:* Carefully prise inner bush out of differential housing.

Refit

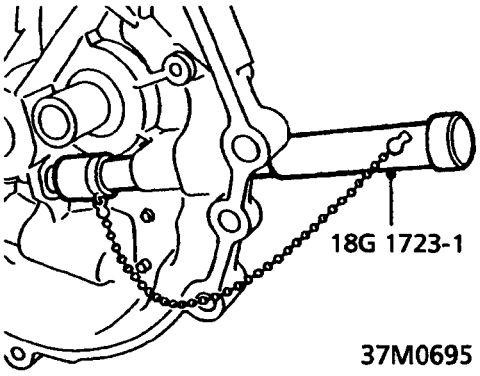

4. *Inner bush:* Using tool **18G 1723-1,** drift inner bush into differential housing.

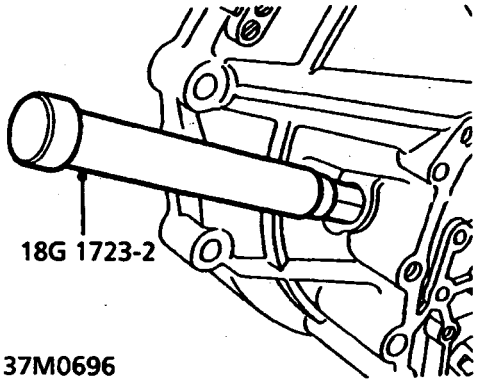

5. *Outer bush:* Using tool **18G 1723-2,** drift outer bush into differential housing.

CAUTION: Ensure end of tool 18G 1723-2 is located in inner bush.

6. *Gearboxes fitted with output shaft bearing retainer plate:* Remove all traces of Patchlok compound from output shaft bearing retainer plate bolt holes using an M6 tap.

CAUTION: Ensure bolt holes are thoroughly cleaned.

COMPONENT ASSEMBLING

Differential

1. Assemble planet gears and original thrust washers.
2. Fit sun gears and original thrust washers - if fitted.
3. Rotate gears and thrust washers to align drillings in carrier.

CAUTION: Do not fit roll pin or final drive gear at this stage.

Torsen differential

4. Position speedometer drive gear on carrier.
5. Using a suitable length of tubing, drift gear fully on to carrier.

Standard differential

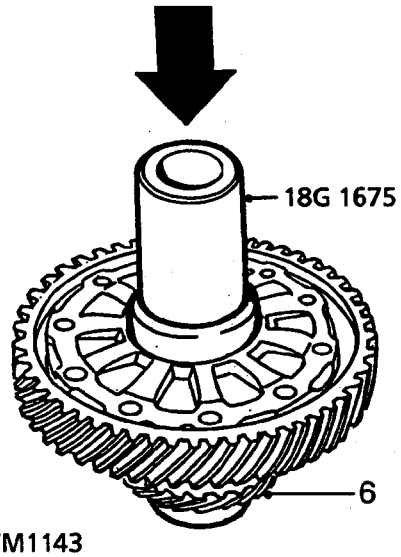

37M1143

6. Position speedometer drive gear on carrier.
7. Fit new ball bearings to carrier using tool **18G 1675.**

NOTE: Larger of the two bearings is fitted on speedometer drive gear side.

Synchro Assemblies

1. Assemble each synchro sleeve to its respective hub ensuring that raised teeth on the sleeve are aligned with the deeper grooves in hub.
2. Fit spring rings to retain hub.

NOTE: Only one spring ring is fitted on 5th speed synchro.

3. Assemble synchro rings to their respective sleeves.

CAUTION: When assembling the 5th gear synchro sleeve to hub, it is possible to position the raised teeth on the synchro sleeve in the machined cut-aways for the synchro ring. Although the gearbox can be assembled, it will not be possible to select 5th gear.

Selector Shafts

1. Slide 5th and 3rd/4th selector forks on to 5th/reverse selector shaft.

CAUTION: Ensure that longest portion of selector fork lugs face away from shoulder of shaft.

2. Slide 5th/reverse selector on to 5th/reverse selector shaft; secure selector with a new roll pin.

NOTE: Make sure the lock plate and retaining spring are correctly located on 5th/reverse selector fitted with reverse brake.

3. Slide 1st/2nd gear selector fork on to 1st/2nd selector shaft.
4. Locate 1st/2nd selector shaft in 5th/reverse gear selector and 5th gear selector fork.
5. Locate lug on shift arm guide in gearshift holder.
6. Position gearshift holder to interlock; fit shaft.

Reverse Idler Gear and Shaft

1. Fit a new thrust washer.
2. Smear needle bearing rollers with petroleum jelly and fit in idler gear.
3. Fit reverse idler gear to shaft.

NOTE: Boss on gear must face towards thrust washer.

Input Shaft

NOTE: Smear needle bearing rollers with petroleum jelly prior to assembly.

1. Fit needle bearing rollers in third gear.
2. Fit 3rd gear on shaft.
3. Fit 3rd/4th synchro assembly.
4. Fit needle bearing rollers in 4th gear, position gear on collar and fit assembly on shaft.
5. Fit needle bearing rollers in 5th gear, position gear on collar.

NOTE: Boss on 5th gear must face away from 4th gear.

6. Fit 5th synchro assembly.

NOTE: Machined groove in synchro hub must face towards 5th gear and large chamfer on synchro sleeve must face away from 5th gear.

7. Fit a new input shaft bearing.

10. Select circlip(s) from sizes available which equal thickness required. Fourteen circlips are available ranging from 0.5 mm to 1.15 mm thick in increments of 0.05 mm.

CAUTION: No more than two circlips may be fitted. It is not always possible to select the exact thickness of circlips required; where this occurs, always fit a slightly thinner pack to avoid pre-loading bearings.

11. Remove bolts securing gear case; remove gear case.
12. Remove input shaft assembly.
13. Remove input shaft bearing from differential housing using a soft metal drift.

Differential Pinion Gear Backlash - Check and Adjust

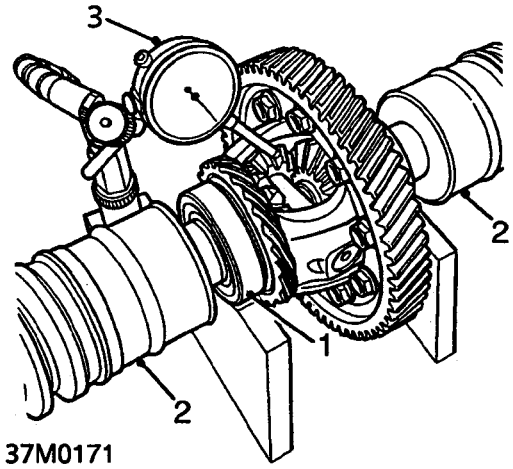

1. Position differential assembly with bearings located in V blocks.
2. Fit both inboard drive shaft joints to align gears.
3. Assemble a DTI gauge with stylus of gauge contacting one of the planet gears; zero the gauge.
4. Measure and record planet gear backlash.
5. Repeat procedure for other planet gear.
6. Compare backlash figures obtained with the following:
   Planet gear backlash = 0.05 to 0.15 mm
7. If backlash is not as specified, remove planet gears, measure thickness of original thrust washers and from figures obtained, calculate thickness of thrust washers required to give correct backlash.

CAUTION: Thrust washers selected must be of equal thickness, and are available from 0.70 to 0.90 mm thick in increments of 0.20 mm.

8. Fit selected thrust washers, secure pinion shaft with a new pin.

Standard and Torsen differentials:

9. Fit final drive gear to carrier ensuring reference marks are aligned.
10. Fit 10 bolts and tighten progressively to 110 Nm.

Differential Bearing Pre-load - Check and Adjust

1. Position original selective circlip in gear case.
2. Position differential assembly in differential housing.
3. Fit gear case, fit and tighten bolts to 45 Nm.
4. Lightly drive differential assembly into gear case to seat circlip.
5. Lightly drive differential into differential housing to settle bearing.

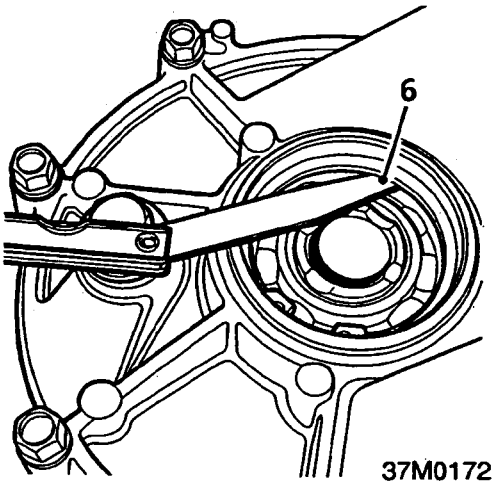

6. Using feeler gauges measure and record clearance between circlip and bearing outer face.
   Correct clearance = 0.15 mm maximum
7. If clearance is not as specified, select the appropriate circlip from the range available.

NOTE: Circlips are available from 2.50 to 3.00 mm thick in increments of 0.10 mm.

8. Remove original circlip through oil seal aperture using tool **18G 1392.**
9. Fit selected circlip using tool **18G 1392.**
10. Re-check bearing pre-load using above procedure.
11. Remove differential assembly, retain selected circlip.

GEARBOX ASSEMBLING

1. Lightly lubricate all components with gearbox oil.

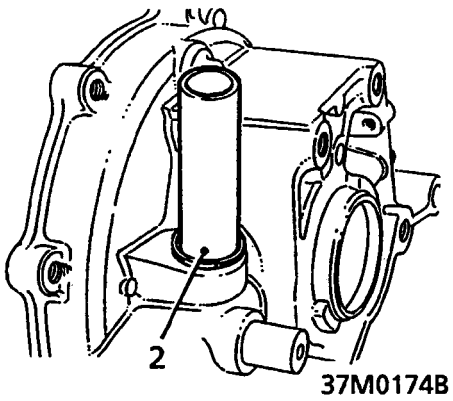

2. Using a suitable piece of tubing, fit a new selector shaft oil seal.
3. Fit output shaft oil guide plate in differential housing.

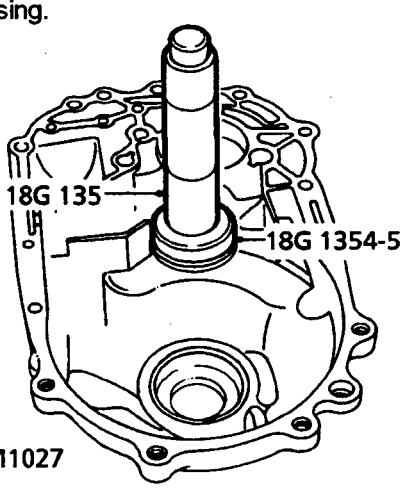

4. Fit a new output shaft bearing in differential housing using tools **18G 1354** and **18G 1354-5.**

NOTE: Depending on application, output shaft bearing may have oil holes drilled in bearing cage; these holes must face towards output shaft when fitting bearing. Bearings without the oil hole may be fitted either way round.

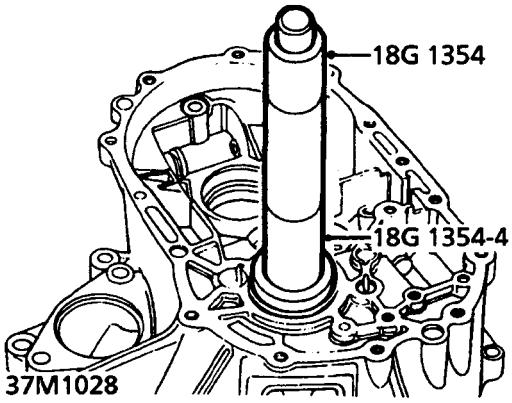

5. Fit a new input shaft oil seal in differential housing using tools **18G 1354** and **18G 1354-4.**

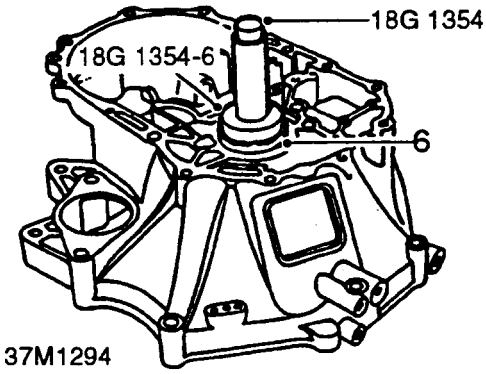

6. Fit input shaft bearing into differential housing using tools **18G 1354** and **18G 1354-6.**

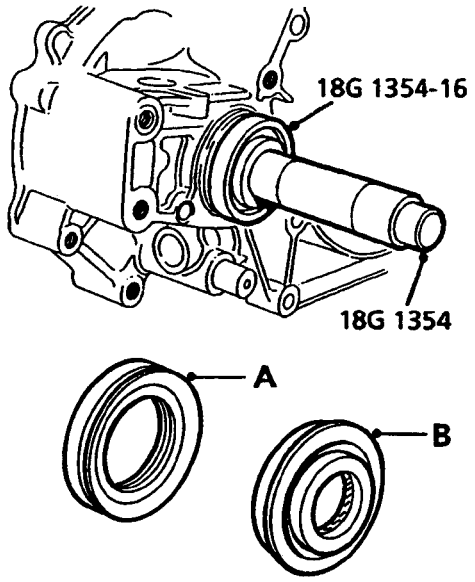

37M1145

CAUTION: Differential oil seals: Type A are fitted with early drive shafts. Type B oil seals are fitted to later drive shafts. The later oil seals are waxed and must be fitted dry. Ensure that replacement seals are the same type as those removed.

7. Fit a new differential oil seal in differential housing using tools **18G 1354** and **18G 1354-16.**
8. Fit output shaft bearing retaining plate - if fitted.

CAUTION: Ensure side marked TOP is facing towards output shaft.

9. Fit 2 new Patchlok bolts to secure bearing retaining plate; tighten bolts to 8 Nm.
10. Fit selector shaft and selector shaft guide.
11. Fit and tighten dowel bolt to 28 Nm.
12. Fit detent ball, spring and cap bolt, tighten bolt to 22 Nm.
13. Position differential assembly into housing.

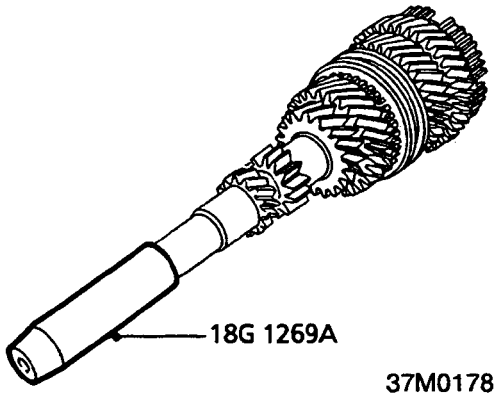

37M0178

14. Fit seal protector, tool **18G 1269A** to input shaft, or apply masking tape to splines to protect oil seal.
15. Place input and output shafts together and fit assembly in differential housing.

NOTE: Position housing so that when fitted, end of input shaft is clear of bench.

16. Remove tool **18G 1269A.**
17. Ensure output shaft nut is staked.
18. Position gears in neutral.
19. Raise both shafts slightly and fit selector forks assembly ensuring forks are located in grooves in synchro sleeves.
20. Fit reverse idler gear, thrust washer and shaft.

NOTE: Large boss on idler gear must be towards differential housing.

21. Fit reverse selector fork and bracket.
22. Fit and tighten retaining bolts.
23. Fit interlock assembly ensuring base of interlock locates in slot at lower end of 1st/2nd selector shaft.
24. Fit and tighten interlock retaining bolts.

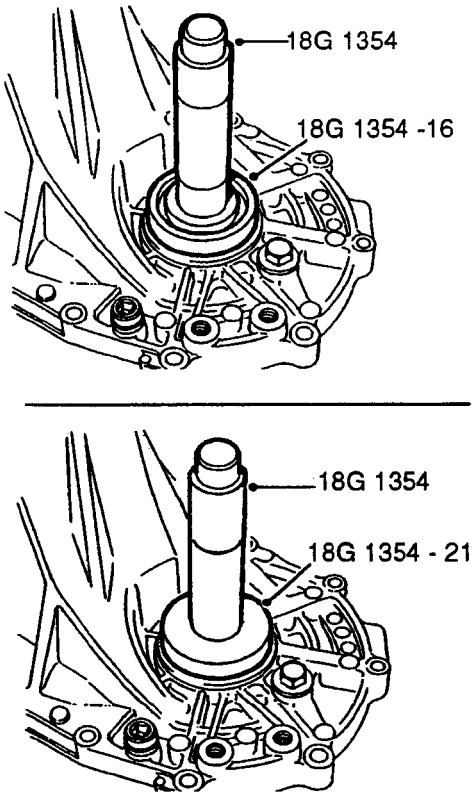

37M1146A

25. Fit new differential oil seals in gear case.

NOTE: Type A oil seal - use 18G1354 and 18G 1354-16
Type B oil seal - use 18G 1354 and 18G 1354-21

26. Fit input shaft oil guide plate in gear case.
27. Fit a new Belleville washer and selected circlip(s).
28. Fit selected circlip(s).
29. Fit new output shaft circlip in gear case.
30. Fit selected circlip in differential bearing recess in gear case.
31. Apply a bead of RTV silicone sealant to mating face of gear case.
32. Position gear case over differential housing keeping gear case square to housing.
33. Lower gear case into position and at the same time, expand output shaft bearing circlip using tool **18G 1392.**
34. Push gear case fully down on to differential housing.
35. Ensure circlip is fully seated in groove in output shaft bearing, raise output shaft and a click will be heard as circlip enters groove.
36. Fit and progressively tighten gear case bolts to 45 Nm.
37. Fit reverse idler shaft bolt and tighten to 67 Nm. Use a new washer.
38. Apply thread sealant to access plug, fit and tighten plug using tool **18G 1472.**
39. Fit reverse light switch and new washer, tighten to 25 Nm.
40. Fit speedometer drive pinion and housing, use a new 'O' ring; fit retaining plate, fit and tighten bolt to 5 Nm.
41. Fit new clutch release shaft oil seal.
42. Fit clutch release shaft and fork.
43. Fit and tighten bolt to 29 Nm.

AIR CONDITIONING, HEATING & VENTILATION

SECTION PH - ELISE & EXIGE 2000 M.Y.

	Sub-Section	Page
General Description	PH.1	2
Controls Operation & Airflow Distribution	PH.2	5
Vacuum Control System	PH.3	9
A.C. Clutch & Cooling Fan Control	PH.4	12
Coolant Re-circulation Pump	PH.5	12
Refrigerant Handling	PH.6	13
Refrigerant Pipework Precautions	PH.7	14
Refrigerant Oil	PH.8	16
Compressor	PH.9	16
Condenser	PH.8	16
Receiver-Drier	PH.11	20
Expansion Valve	PH.12	21
Evaporator Unit	PH.13	22
Heater/Blower Fan Assembly	PH.14	23
Exige A.C. Circuit Diagram	-	24

Heater Circuit

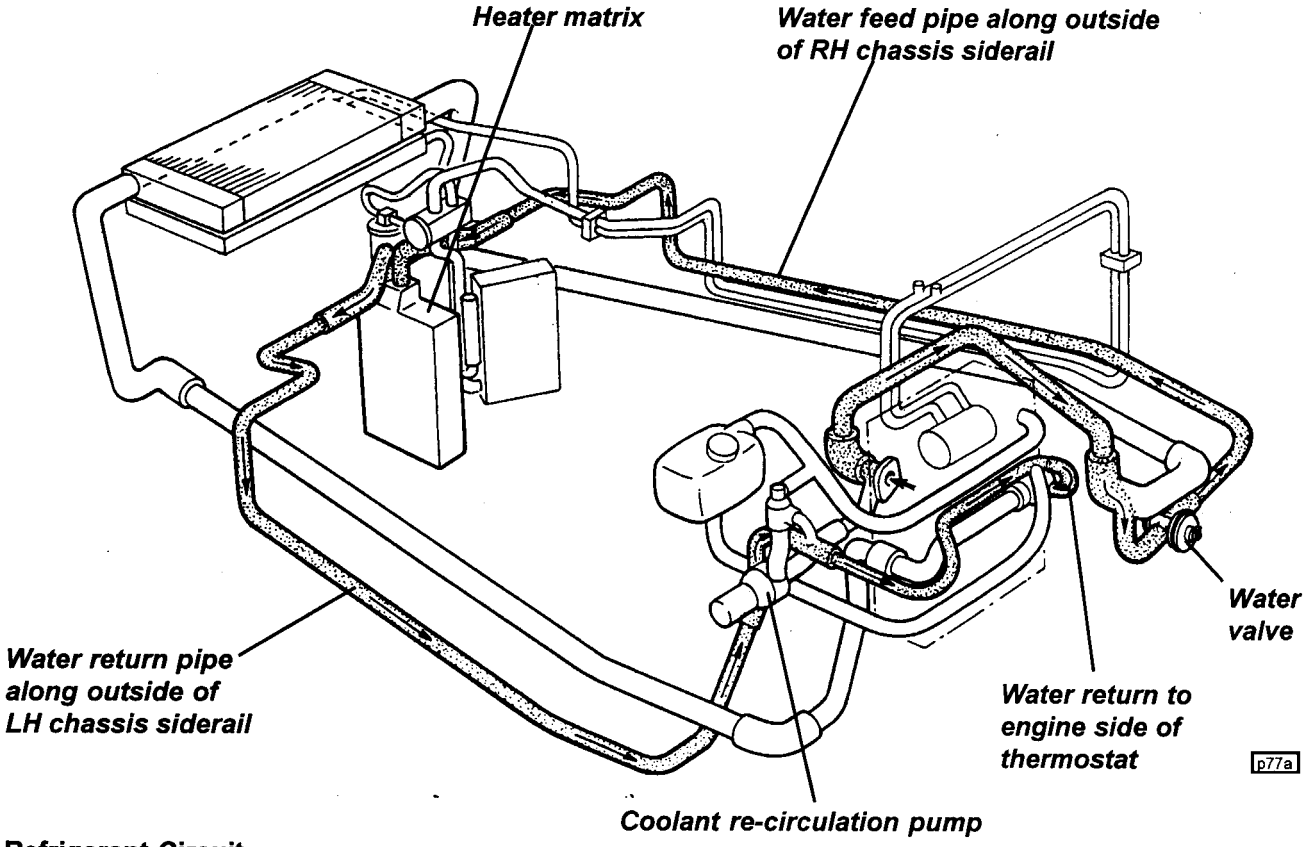

Refrigerant Circuit

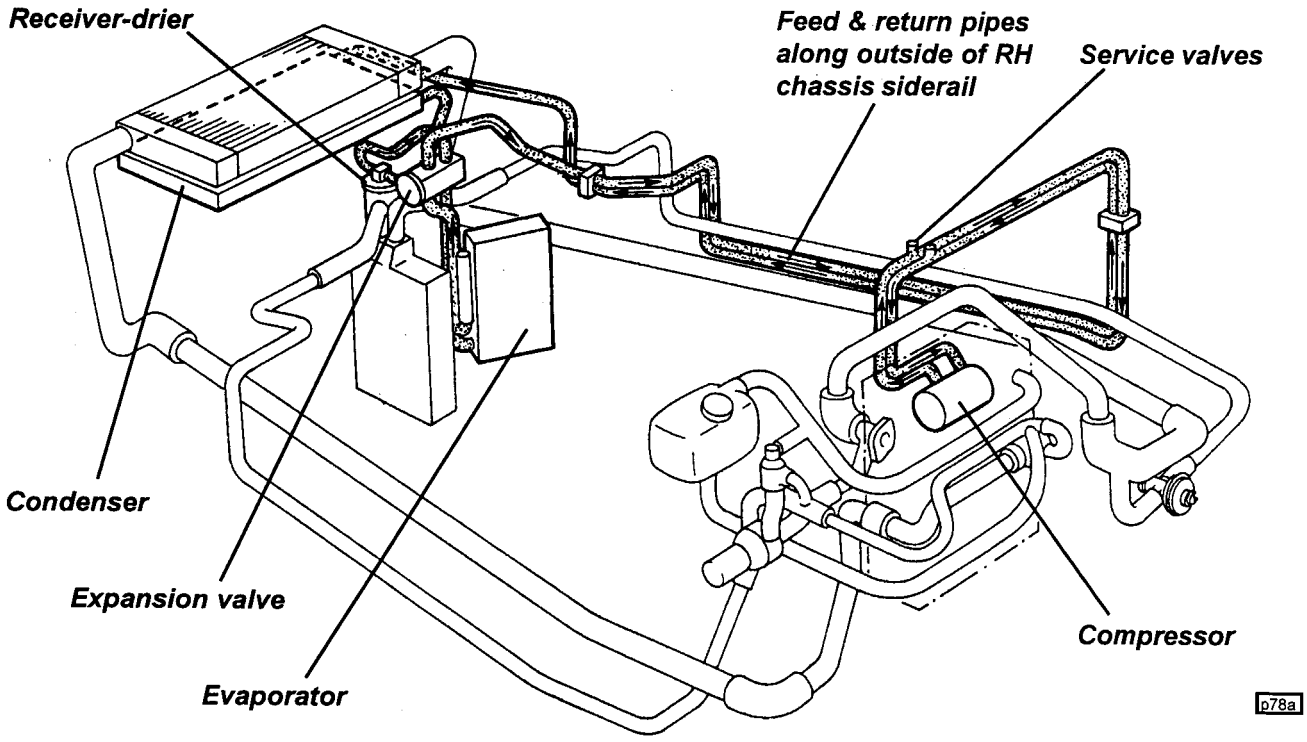

RCL0124ENG 2nd edition

© 1996 Rover Group Limited
Published by Rover Technical Communication

SERVICE NOTES

ELISE

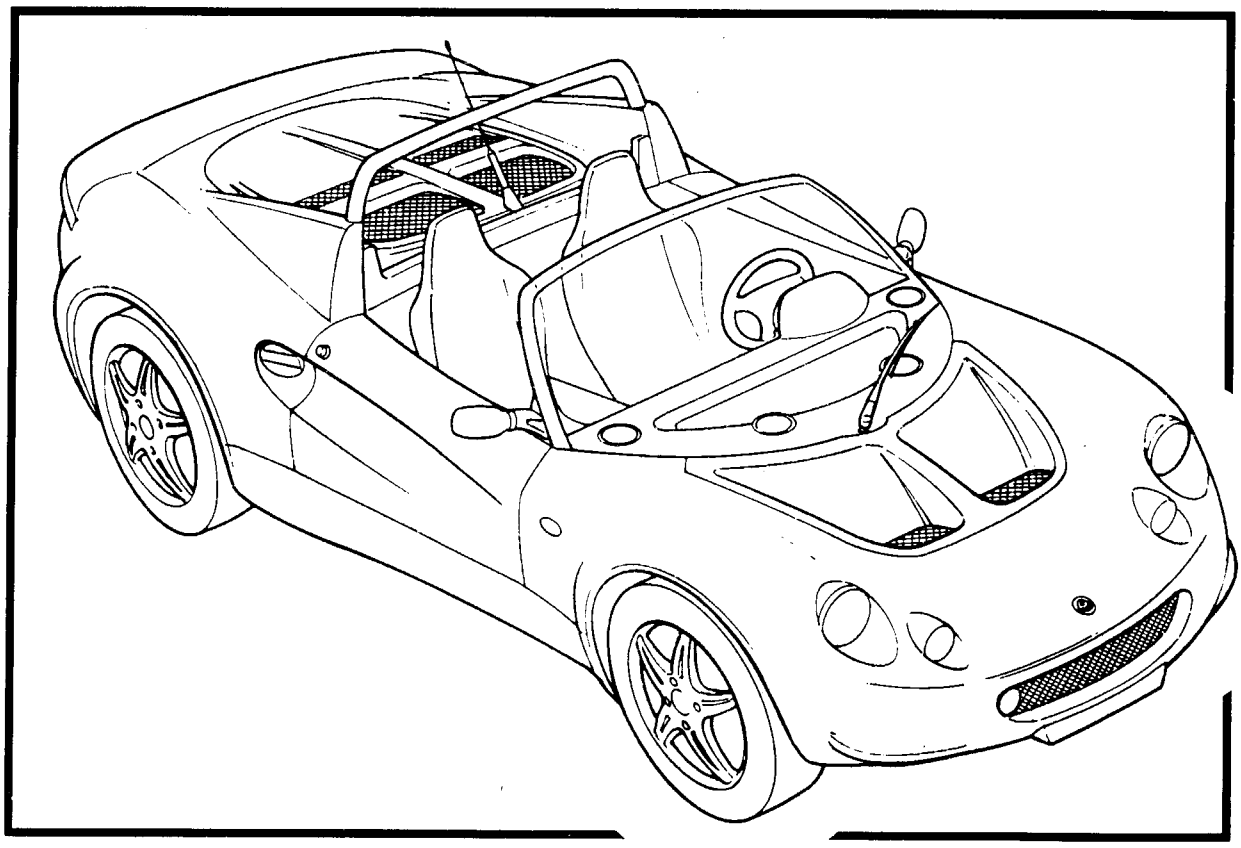

LOTUS CARS LTD

Norwich, Norfolk, NR14 8EZ, England. Telephone: 01953 608000 Telefax: 01953 608300

Part Number A111T0327J

© Lotus Cars Ltd. 1996

Publication Part Number A111T0327J

© Lotus Cars Ltd. June 1996.

This publication has been designed for use by Lotus Dealers familiar with general workshop safety procedures and practices. Take all appropriate action to guard against injury to persons or damage to property.

Lotus policy is one of continuous product improvement, and the right is reserved to alter specifications at any time without notice.

Whilst every care has been taken to ensure correctness of information, it is impossible to guarantee complete freedom from errors or omissions, or to accept liability arising from such errors or omissions, but nothing herein contained shall affect your statutory rights.

CONTENTS

M111 ELISE

		Section
Technical Data	- Engine	TDL
	- Vehicle	TDM
Chassis		AF
Bodycare & Repair		BM
Body Fittings		BN
Front Suspension		CG
Rear Suspension		DE
Engine (inc. Rover publication RCL 0057ENG)		EE
Engine Management		EMN
Transmission (inc. Rover publication RCL 0124ENG)		FH
Wheels & Tyres		GF
Steering		HE
Brakes		JH
Engine Cooling		KF
Fuel System		LH
Electrics		MN
Maintenance & Lubrication		OG
Heating & Ventilation		PF
Clutch		QF
Motorsport		XA
340R Supplement		340R
Exige Supplement		Exige

VEHICLE IDENTIFICATION NUMBER & ENGINE NUMBER

The Vehicle Identification Number (V.I.N.) is stamped on the chassis in the right hand rear wheelarch area, and is also printed on a label stuck to the body in the front services compartment. The engine number is marked on a vertical patch at the left hand end of the forward face of the cylinder block, and is most easily viewed using a mirror.

Both numbers should always be quoted with any vehicle enquiries, as Factory records are filed against V.I.N., and specification change points are identified by V.I.N. or engine number. The vehicle licence number may not accurately reflect vehicle age, may also be changed during the car's life, and is an unreliable method of vehicle identification.

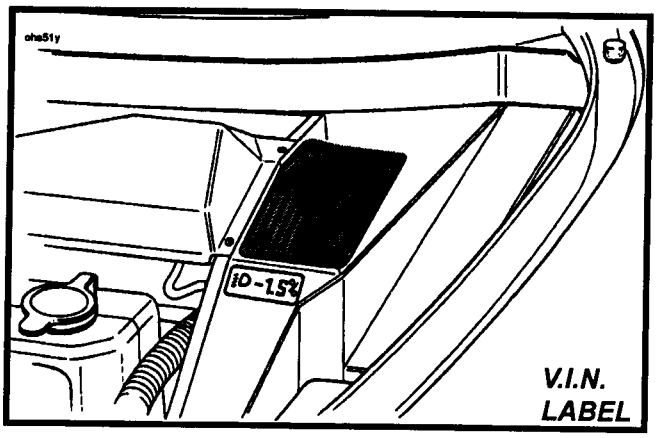

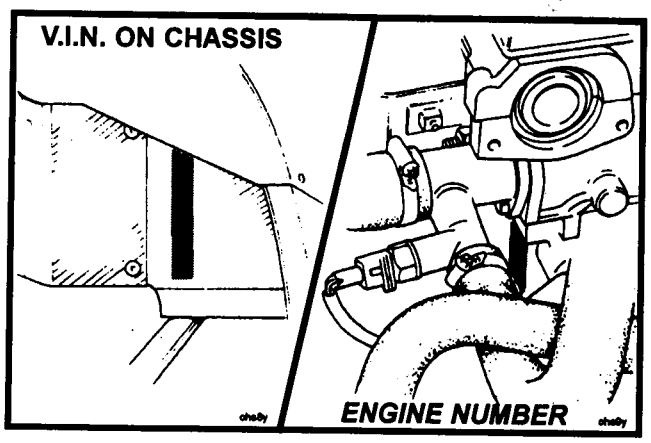

The V.I.N. comprises 17 characters, coded in accordance with European Economic Community (EEC) directives. Note that the coding of the V.I.N. changed with the introduction of '98 M.Y. Prior to July 2000, change points will be identified in Service Notes and Service Parts Lists by characters 10 (model year) and 15 - 17, or 14 - 17 (serial number). After July 2000, characters 10 to 17 will be quoted.

'96 & '97 Model Year

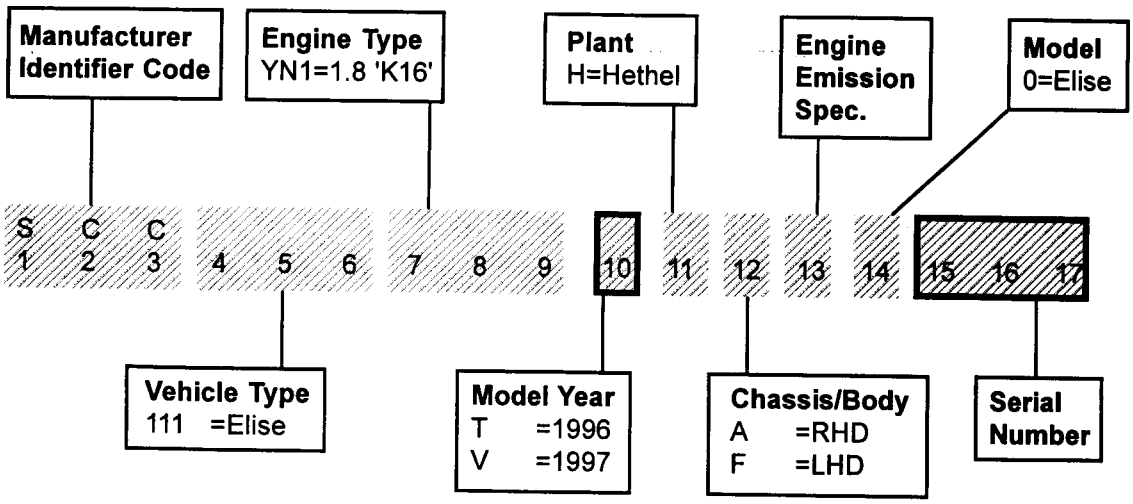

'98 M.Y. onwards

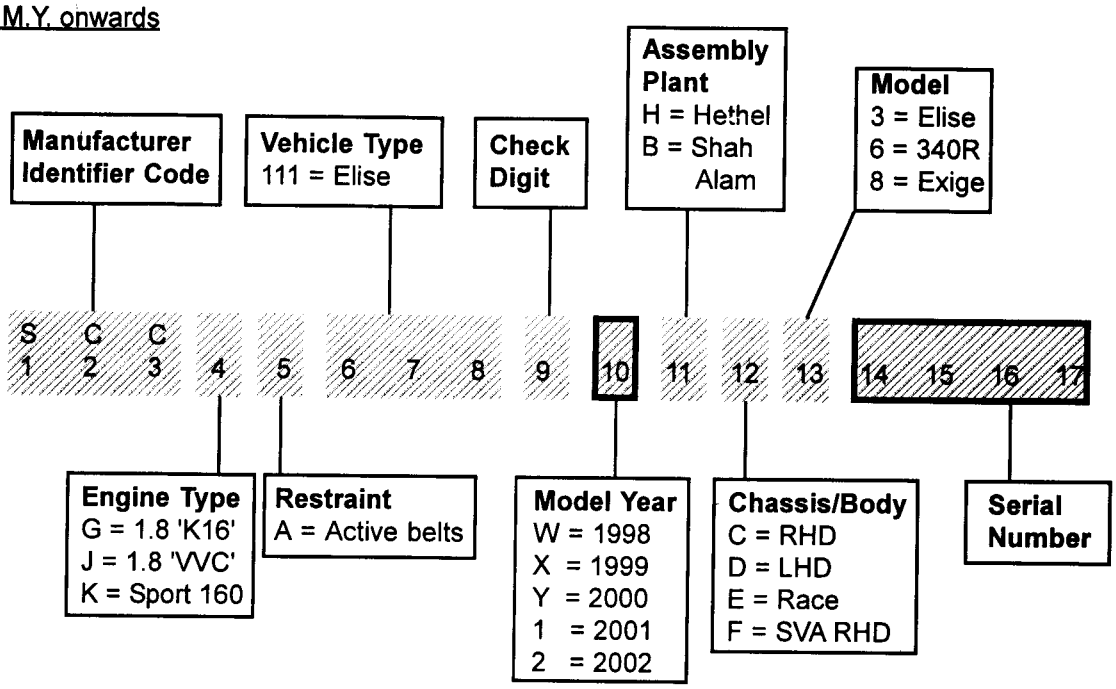

ENGINE BAY UNDERTRAY/DIFFUSER

For certain service operations, it may by necessary to remove the engine bay undertray and/or diffuser panel. The panels are retained by:

- Four M8 button head fixings needing a 5mm hexagonal key;
- Fourteen M5 crosshead screws.

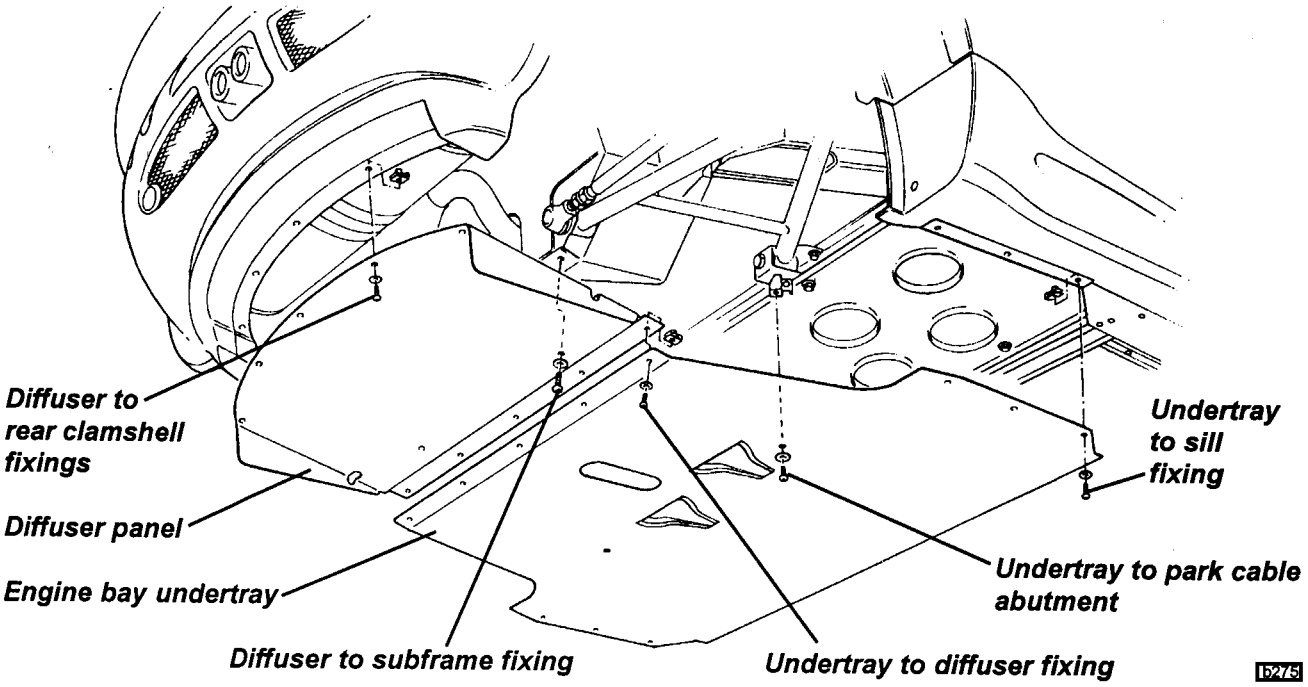

JACKING POINTS

Care must be taken when using a lifting jack or hoist only to position the device in one of the the areas shown in the illustration, with a suitable rubber or timber pad protecting the chassis from surface damage. If a 4-point lift is to be used, the engine bay undertray/diffuser panel (if fitted) must first be removed. When using a 4-point lift, it is strongly recommended that for optimum stability and safety, positions B and D are used.

A; Identified by a blue sticker. Beneath crossmember ahead of fuel tank bay. To be used one side at a time for wheel changing - lifts both wheels on one side. *Do not use with a four point garage lift.*

B; Beneath the front end of the right or left hand main chassis rail, behind the front wheelarch. Garage use with 4-point lift in conjunction with (C).

C; *The engine undertray/diffuser panel must first be removed.* Beneath the outboard end of the chassis crossmember ahead of the rear wheelarches. Take care to position the jack between the fixing screws for the fuel tank bay perforated undershield. Garage use with 4-point lift in conjuction with (B).

D; *The engine undertray/diffuser panel must first be removed.* Beneath the rear subframe, close to the lower wishbone rearmost mountings.

Jacking at any other point may damage the chassis or body structure and/or jeopardise safety.

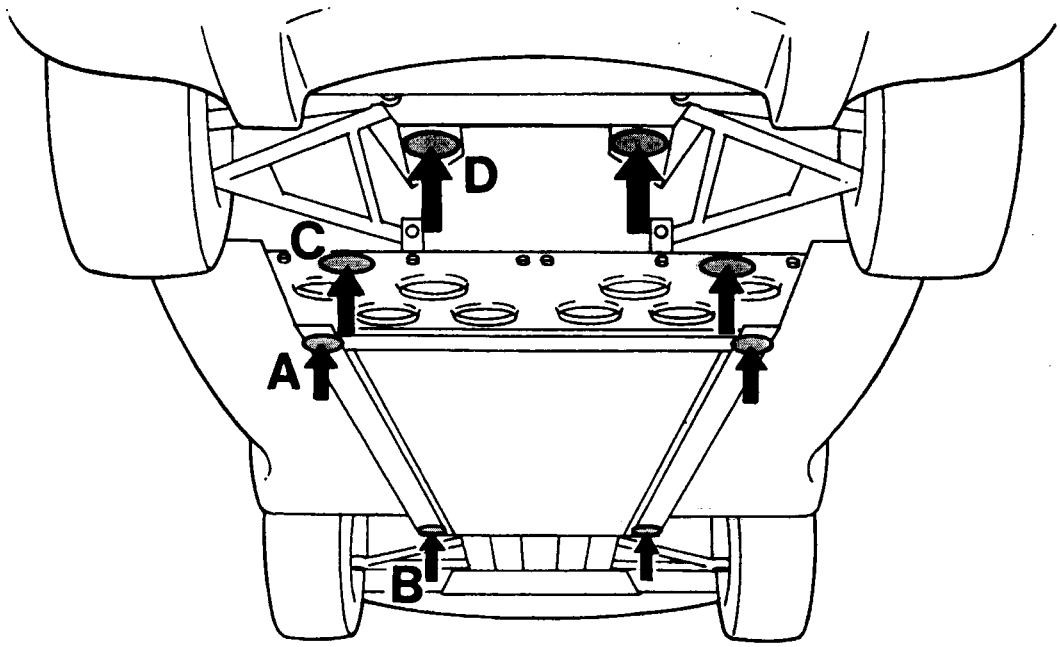

ohs49sn

ELISE MODEL HISTORY

Model Introduction: June '96
VIN: T 0017 onwards

1997 Model Year: November '96
VIN: V 240 onwards
No specification change.

Uprated Starter Motor: February '97
VIN: V 685
Starter motor uprated from 1.0 kW to 1.4 kW and engine management fuse relocated from rear to front services compartment.

Commonisation of a.c. type chassis: September '97
VIN: V 1685 (approx.) Plus; 1672, 1673, 1677, 1682. Less; 1694, 1708.
Shape of chassis, rear side of fuel tank crossmember, changed to accommodate a.c. compressor. Low level engine coolant outlet pipe. Re-circ. ventililation holes in chassis toe-board.

1998 Model Year: October '97
VIN: W 1814 onwards.
No specification change.

Revised Harness & Main Fusebox: October '97
VIN: W 1941 onwards. Plus; 1920, 1926, 1937, 1938. Less; 1965, 2002.
New harness introduced to accommodate optional U.K. market Cobra 6422 alarm. New main fusebox with 22 'Littel' fuses in front luggage compartment.

Optional U.K. Market Cobra 6422 Alarm: October '97
VIN: W 1947 onwards. Plus 1937, 1938.
Option upgraded from Cobra 6019HF to 6422. Facility to reprogramme transmitter keys. Override switch deleted.

Front Brake Disc Shields: December '97
VIN: W 2260 (approx.)
Alloy shield fitted on inboard side of front discs to protect from debris and balance pad life.

Revised Soft Top Cant Rails: May '98
VIN: W 3332
Latches on rear end of roof cant rails use new dovetail design to improve location. Door seals changed to incorporate moulded front ends to mate with new cantrail front seals. New soft top canopy with press studs reposiitioned to suit new cant rails. Parts set required to fit hardtop roof.

Cast Iron Brakes: June '98
VIN: W 3714 (approx.)
Cast iron brake discs and corresponding pads replace aluminium metal matrix brakes.

Integral Boot Box: September '98
VIN: W 4429 (approx.) Plus; 4140, 4315, 4365, 4383. Less 4653.
Rear clamshell incorporates integral luggage compartment box to replace luggage bag.

1999 Model Year: November '98
VIN: X 4976 onwards.
No specification change.

135 Sport: November '98

VIN: X 5401 - 5450, 6001 - 6035.

135 bhp cylinder head; Close ratio gearbox; Sports exhaust; Competition style seats; Sports steering wheel; Drilled iron brake discs; Quicksilver paint with blue soft top; Headlamp covers; Body graphics; Silver roll over bar. 2nd batch variations: 111S wheels, tyres & spats; black painted fuel filler cap; matt finish alloy gear knob; Sport 135 99 side decals.

Integral Stud Toe-Link Ball Joints: December '98

VIN: X 5479

Rear suspension toe-link ball joint design changes to incorporate integral M10 stud.

50th Anniversary Elise: January '99

VIN: X 5463 - 5816 (total 51)

Anniversary green with gold wheels, green/rafia leather seats, 'Elise' floor mats, gold decals, Anniversary decal on rear transom.

Angled Rear Window: January '99

VIN: X 5558

Rear window mounted in angled surround to reduce reflections.

Elise 111S: January '99

VIN: X 5722

VVC engine & close ratio transmission. Revised muffler & tailpipes. Cross-drilled iron discs. Lotus styled 6-spoke road wheels, 7.5" rear rims with 225/45 ZR16 rear P Zeros. Optional rear spoiler extension. Acrylic headlamp covers & smoke front indicator lenses. Composite engine lid, rear wheelarch spats, '111S' decal on rear body & fascia, moulded air intake grille. Forged alloy window winders, weave patterned dash inserts, revised seat foams & stitching.

Elise 'JPS': July '99

Available based on either standard or 111S versions. Black body colour. All cars have gold painted grilles as follows; radiator air intake, radiator outlet, engine lid outlet, rear clamshell recess, engine bay intake. All cars have gold painted 111S type road wheels, black and gold Alcantara steering wheel, gold painted dash insert panels, 111S type black leather seats with gold Alcantara centres, gold decals on rear body and dash, black & gold nose badge, Union Flag decal on rear. Standard versions also have headlamp covers and rear wheelarch spats.

Elise 'Type 49': October '99

Available based on either standard or 111S versions. Two tone red/white body colour. All cars have gold painted 111S type road wheels, black and red Alcantara steering wheel, 111S type black leather seats with red Alcantara centres, gold decals. Standard versions also have headlamp covers and rear wheelarch spats.

Elise 'Millenium': October '99

Available based on either standard or 111S versions. Atlantis Blue body colour. All cars have blue Alcantara steering wheel pad and sill trim panels, 111S type black leather seats with blue Alcantara centres. Standard versions also have 111S type road wheels, rear wheelarch spats and headlamp covers. Cars were usually supplied with a range of dealer fitted Lotus accessories.

Forged Steel Rear Hub Carriers: November '99

VIN: X 8177 (approx.)

New design forged steel rear hub carrier replaces extruded alloy carrier, and incorporates caliper mounting plate, and lower ball joint carrier.

Elise 340R: January '00

VIN: Y 0004 to 0009, 9640 onwards.

Limited edition of 340. Extreme lightweight version of the Elise, based on modified standard chassis fitted with minimalist bodywork and a detuned, road going version of the VHPD powertrain. See 340R supplement for full specification.

Sport 160: February '00

SVA: VIN: Y 00601 to 00650.

WVTA: VIN: Y 0651 onwards.

First 50 cars with Single Vehicle Approval. Subsequent cars Whole Vehicle Type Approved. High performance derivative, based on 111S specification with 160 PS fixed valve timing engine. WVTA versions require airbox modification and sport exhaust fitment for full power release. Other features include new engine controller, sport suspension, 'race' wheels, plinth mounted rear aerofoil, Alcantara trimmed seats and steering wheel pad, body decals.

Exige: July '00

VIN: Y 0001 (Character 13 = 8) - model specific serial number sequence.

Road going version of the Elise race series car, with 178 bhp 340R engine, close ratio transmission, sport suspension and larger 12-spoke black finish wheels (16x7 & 17x8.5) with Yokohama A039 tyres. Front and rear clamshells styled as race car with piller mounted rear aerofoil. Clear polycarbonate rear tailgate with air ducting, linked to roof mounted air intake duct. Optional Alcantara sports seats and 340R harnesses. Meta security system. Roof duct mounted radio aerial.

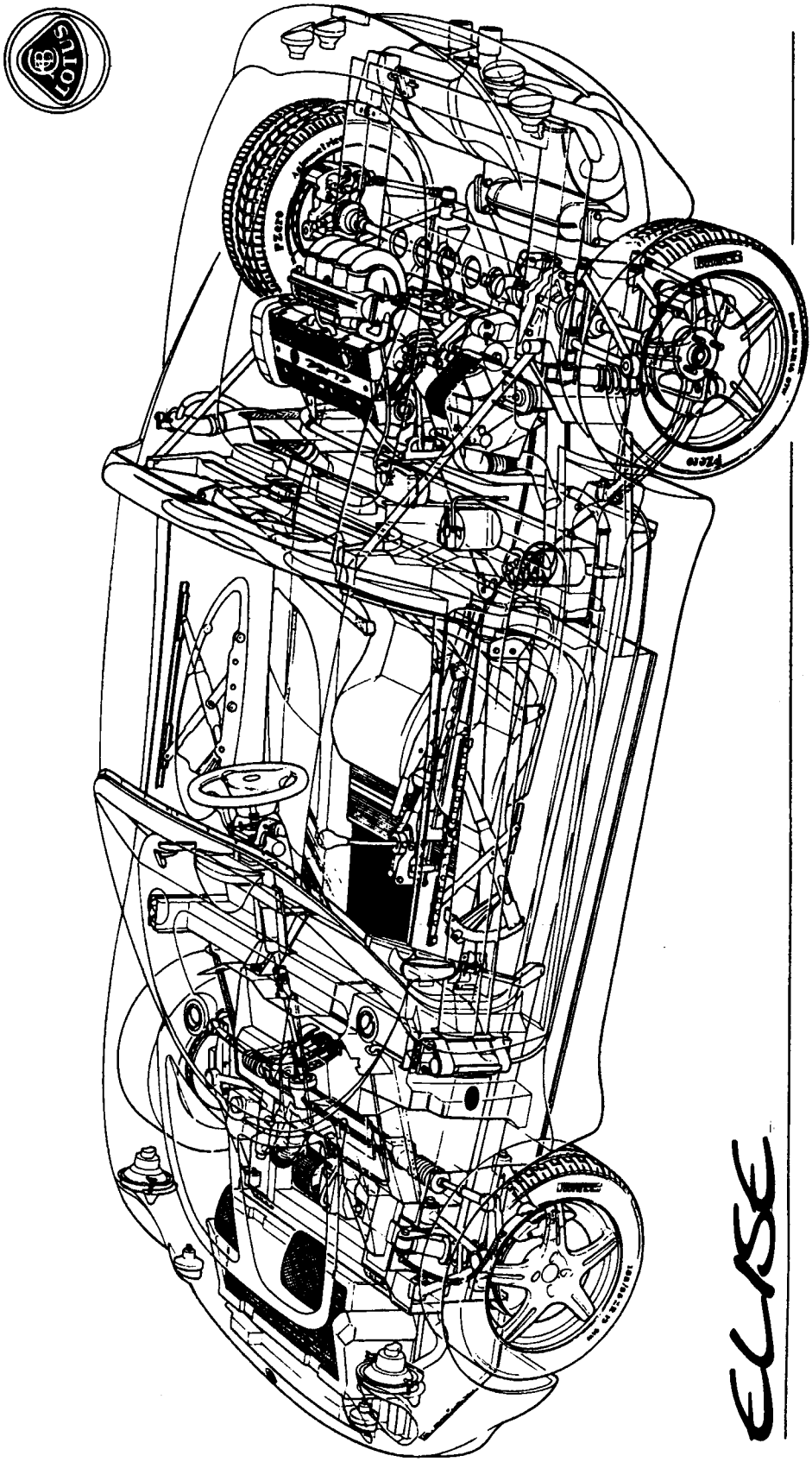
ELISE

TECHNICAL DATA - ENGINE

SECTION TDL - M111 ELISE

Page

General
Cylinder Head 2
Camshafts & Valve Timing 2
Valves 2
Valve Guides 2
Valve Seats 3
Valve Springs 3
Crankshaft 3
Piston Rings 3
Piston 3
Cylinder Block 3
Oil Pump 3
Coolant Thermostat 4
..... 4

GENERAL

Type designation - std	K16 (18K4F)
- 111S	K16 (18K4K)
Configuration & no. of cylinders	in-line 4
Capacity	1796 cm^3 (70.71 in^3)
Bore	80.00 mm (3.150 in)
Stroke	89.30 mm (3.516 in)
Valve actuation - std	Belt driven twin overhead camshafts with hydraulic tappets
- 111S	As std. with variable valve control (VVC) on inlet camshaft
Compression ratio	10.5:1
Firing order	1,3,4,2
Spark plugs	RC8 PYP or CSP 9652
Spark plug gap	0.9 ± 0.1 mm (0.035 in)
Maximum engine speed	7000 rpm
Fuel system - std	Multi-point grouped fuel injection with MEMS 1.9 engine management
- 111S	Sequential fuel injection with MEMS 2J engine management
Fuel requirement	Unleaded 95 RON minimum
Max power (88/195/EEC) - std	88 kW (118 bhp) @ 5,500 rpm
- 111S	107 kW (143 bhp) @ 7,000 rpm
Max torque (88/195/EEC) - std	165 Nm (122 lbf.ft) @ 3,000 rpm
- 111S	174 Nm (128 lbf.ft) @ 4,500 rpm

CYLINDER HEAD

Material	Aluminium alloy
Head face maximum warpage	0.05 mm
Cylinder head height - new	118.95 to 119.05 mm
- reface limit	0.20 mm

CAMSHAFTS & VALVE TIMING

Std	
Open duration	244° (at crankshaft)
Inlet valve opens	12° BTDC
Inlet valve closes	52° ABDC
Exhaust valve opens	52° BBDC
Exhaust valve closes	12° ATDC
Valve overlap	24°
Valve lift - inlet	8.8 mm
- exhaust	8.8 mm
111S	
Open duration - inlet (variable)	220° to 295°
- exhaust	252°
Inlet valve opens	0° BTDC at minimum period
Inlet valve closes	40° ABDC at minimum period
Exhaust valve opens	51° BBDC
Exhaust valve closes	21° ATDC
Valve overlap (variable)	21° to 58°
Valve lift - inlet	9.5 mm
- exhaust	9.2 mm

VALVES

Angle of valve seats and faces	45°
Stem diameter - inlet	5.952 - 5.967 mm
- exhaust	5.947 - 5.962 mm

Stem clearance in guide	- inlet	- new	0.033 - 0.063 mm
		- service limit	0.070 mm
	- exhaust	- new	0.038 - 0.078 mm
		- service limit	0.110 mm
Valve clearance			Hydraulically controlled.
Valve stem fitted height	- new		38.93 - 39.84 mm
	- service limit		40.10 mm

VALVE GUIDES

Inside diameter	6.000 - 6.025 mm
Fitted height	6.0 mm

VALVE SEATS

Seat face angle	45°

VALVE SPRINGS

Std	
Free length	50.0 mm
Fitted length	37.0 mm
Load at fitted length	250 ± 12 N
Load at full lift	450 ± 18 N
VVC	
Free length	47.6 mm
Fitted length	37.0 mm
Load at fitted length	210 ± 13 N
Load at full lift	440 ± 22 N

CRANKSHAFT

Crankshaft endfloat	- new	0.10 - 0.25 mm
	- service limit	0.34 mm
Thrust washer thickness		2.61 - 2.65 mm
Main journal diameter		47.979 - 48.007 mm (for grading see Section EE)
Maximum out of round		0.010 mm
Big end journal diameter		47.986 - 48.007 mm (for grading see Section EE)
Maximum out of round		0.010 mm
Big end clearance		0.021 - 0.049 mm

PISTON RINGS

New ring to groove clearance	- top compression	0.040 - 0.072 mm
	- second compression	0.030 - 0.062 mm
	- oil control	0.010 - 0.180 mm
New ring gap, 20mm from bore top	- top compression	0.20 - 0.35 mm
	- second compression	0.28 - 0.48 mm
	- oil control	0.15 - 0.40 mm

PISTON

Piston diameter (8mm from bottom, 90° to pin)	- grade A	79.975 - 79.990 mm
	- grade B	79.991 - 80.005 mm
Clearance in bore (20mm from bottom of bore)		0.01 - 0.04 mm

CYLINDER BLOCK

Cylinder liner bore (65mm from top)	- red grade A	80.000 - 80.015 mm
	- blue grade B	80.016 - 80.030 mm

OIL PUMP

Outer rotor to housing clearance	0.28 - 0.36 mm
Inner rotor tip clearance	0.05 - 0.13 mm
Rotor end float	0.02 - 0.06 mm

COOLANT THERMOSTAT

Nominal setting	85 - 91°C
Thermostat starts opening	88°C
Thermostat fully open	100°C

TECHNICAL DATA - VEHICLE

SECTION TDM - M111 ELISE

Page

Dimensions 2
Capacities 2
Tyres 2
Winter Tyres 3
Wheels 3
Front Suspension 3
Rear Suspension 4
Electrical 4
Transmission 4
Clutch 5
Brakes 5
Steering 5
Fuel Consumption 5

DIMENSIONS

Overall length	- std		3726 mm (146.7 in)
	- 111S		3734 mm (147.0 in)
Overall width	- exc. mirrors	- std	1701 mm (67.0 in)
		- 111S	1703 mm (67.0 in)
	- inc. mirrors		1850 mm (72.8 in)
Overall height (at kerb weight)			1148 mm (45.2 in)
Wheelbase			2300 mm (90.6 in)
Track	- front		1440 mm (56.7 in)
	- rear	- std	1458 mm (57.4 in)
		- 111S	1470 mm (57.9 in)
Ground clearance			160 mm (6.3 in)
Front overhang			746 mm (29.4 in)
Rear overhang	- std		680 mm (26.8 in)
	- 111S		688 mm (27.1 in)
Approach angle			12.4°
Departure angle			28°
Unladen weight	- std	- total	755 kg (1664 lb) >
		- front	303 kg (668 lb) >
		- rear	452 kg (996 lb) > inc.full fuel tank
	- 111S	- total	770 kg (1698 lb) >
		- front	303 kg (668 lb) >
		- rear	467 kg (1030 lb) >
Max. weight	- std	- total	974 kg (2147 lb) }
		- front	386 kg (851 lb) }
		- rear	588 kg (1296 lb) } inc.
	- 111S	- total	992 kg (2187 lb) } occupants
		- front	376 kg (829 lb) } & luggage
		- rear	616 kg (1358 lb) }
Trailer towing			Not permissible

CAPACITIES

Engine oil	- dry	5.0 litre (8.8 imp. pt)
	- refill inc. filter	4.5 litre (7.9 imp. pt)
High/low dipstick mark difference		1.0 litre (1.8 imp. pt)
Transmission oil	- dry	2.4 litre (4.2 imp. pt)
	- refill	2.1 litre (3.7 imp. pt)
Fuel tank		36.4 litre (8.0 imp.gall)
Coolant		8.0 litre (14.1 imp. pt)
Refrigerant (R134a)		0.85 kg (1.87 lb)

TYRES (Normal Use)

Standard Fitment

Type			Pirelli P Zero
Size	- front		185/55 R15 81V
	- rear	- std	* 205/50 ZR16 87W
		- 111S & std. option	# 225/45 ZR16
Pressure (cold)	- front		1.6 bar (23 lb/in²)
	- rear	- 205	1.7 bar (24.5 lb/in²)
		- 225	1.9 bar (27.5 lb/in²)

* *Pirelli Zero 205/50 rear tyres:* There are variations in the specification of Pirelli tyres with this designation, dependent on where and when they were manufactured. Lotus fitment should be:

either: i) Made in Italy (moulded on inside tyre wall)

or: ii) Made in Great Britain (moulded on inside tyre wall) ***and*** with a DOT date of week 35 year 1997, coded as 357, or later (see below).

Note:
a) The U.K. built tyre was introduced on production at VIN: V 1700 (approx).
b) Italian and U.K. variations of rear tyre should not be mixed on the same axle.
c) The DOT code is moulded on the outside wall, with only the last number group relevant to this issue. Note that the three digits represent a date code as explained above, and not an ordi nary sequential number.

 # Pirelli Zero 225/45 rear tyres: There are variations in the specification of this Pirelli tyre dependent on when it was manufactured. For the Elise, use only tyres with a DOT date code of week 35 of year 98, coded as '358' or later.

Alternative Service Fitment

As an alternative to Pirelli tyres, a complete vehicle set of Michelin Pilot SX-GT tyres may be fitted in service using the wider rear tyre specification. It is not recommended to mix Pirelli and Michelin tyres on the same vehicle.

Type	Michelin Pilot SX-GT
Size - front	185/55 R15 81V
- rear	225/45 ZR16 89V
Pressure (cold) - front	1.6 bar (23 lb/in²)
- rear	1.7 bar (24.5 lb/in²)

WINTER TYRES

Type	Michelin X M+S 130
Size - front	185/55 R15 81T
- rear	195/60 R15 88T mounted on standard 15 inch ***front*** wheels
Pressure (cold) - front	1.6 bar (23 lb/in²)
- rear	1.7 bar (24.5 lb/in²)
Studding	Not permitted
Tyre chains	Pewag FX 67 S Ring-Super-X (A100G6011F) fitted only on rear winter tyres

WHEELS

Type - std. prior April '99 approx. VIN X 6429	AWI light alloy; 5 split-spoke style
- std. from April '99 approx. VIN X 6429	Rimstock light alloy; 12 spoke style
- 111S & std. option	O.Z. light alloy; 6 spoke style
Size - front	5.5J x 15CH/H2 ET14
- rear - std	7J x 16H2 ET16
- 111S & std. option	7.5J x 16H2 ET10
PCD	95.25 mm
Inset - front	+ 14 mm
- rear - std	+ 16 mm
- 111S & std. option	+ 10 mm
Wheel nut torque	80 - 85 Nm

FRONT SUSPENSION

Type	Independent. Upper and lower wishbone; co-axial coil spring/telescopic damper unit; anti-roll bar.
Geometry check ride height (2 persons, ½ tank fuel) - front	140 mm below front end of chassis siderail
- rear	140 mm below rear end of chassis siderail
Alignment	0.2 mm toe-out overall; - 0, + 0.2 mm (0.03° toe-out overall; - 0, + 0.03°)
Camber	- 0.1°; + 0.1°, - 0.2°. Max side/side; 0.2°
Castor	+ 3.8°; ± 0.2°. Max. side/side; 0.2°
Steering axis inclination	12° nominal

REAR SUSPENSION

Type	Independent. Upper and lower wishbone; co-axial coil spring/telescopic damper.
Geometry check ride height (2 persons, ½ tank fuel)	
- front	140 mm below front end of chassis siderail
- rear	140 mm below rear end of chassis siderail
Alignment	1.2 mm toe-in each side; + 0.2 mm, - 0 (0.18° toe-in each side; + 0.03°, - 0) Max. difference side/side; 0.2 mm (0.03°)
Camber	- 1.8°; ± 0.2°. Max. side/side; 0.2°

For Motorsport suspension settings: see Section XA

ELECTRICAL

Light Bulbs	*Wattage*	*Type*
Headlamps	60/55	H4 P43t
Driving lamps	55	H1
Front side/parking lamps	5	W2x4.6d
Side repeater lamps	5	W2x4.6d
Front & rear turn indicators	21	SCC BA15s
Stop/tail lamps	5/21	SBC BAY15d
High mounted stop lamp	11	891
Rear fog lamp	21	SCC BA15s
Reversing lamp	21	SCC BA15s
Licence plate lamps	5	SU 8.5-8
Interior lamp	10	SU 8.5-8
Fascia switches	1.2	W2x4.6d

System voltage/polarity	12V negative earth
Alternator	85A
Battery - type	Tungstone 063
- cranking power	380 A (SAE); 210 A (DIN); 38 Ahr
- reserve capacity	60 minutes
- European Type Number (ETN)	543-16

TRANSMISSION

Type	5 speed manual transaxle. Bevel gear differential.

Standard:

Gear	*Ratio*	*Final Drive*	*mph(km/h)/1000 rpm*
First	3.17 : 1	)	5.5 (8.9)
Second	1.84 : 1	)	9.5 (15.3)
Third	1.31 : 1	) 3.94 : 1	13.4 (21.5)
Fourth	1.03 : 1	)	16.9 (27.2)
Fifth	0.77 : 1	)	22.9 (36.8)
Reverse	3.00 : 1	)	

111S (close ratio):

Gear	*Ratio*	*Final Drive*	*mph(km/h)/1000 rpm*
First	2.92 : 1	)	5.6 (9.0)
Second	1.75 : 1	)	9.4 (15.1)
Third	1.31 : 1	) 4.20 : 1	12.6 (20.3)
Fourth	1.03 : 1	)	16.0 (25.7)
Fifth	0.85 : 1	)	19.4 (31.2)
Reverse	3.00 : 1	)	

CLUTCH

Type		Single dry plate. Diaphragm spring cover. Hydraulic release.
Friction plate diameter		215 mm
Diaphragm finger clearance		1.00 mm
Diaphragm finger height	- new	37.5 - 32.1 mm
	- service limit	42.75 mm
Friction plate thickness	- new	7.4 - 6.9 mm
	- service limit	5.6 mm
Rivet depth	- new	1.00 mm
	- service limit	0.20 mm
Friction plate run-out	- new	0.80 mm
	- service limit	1.00 mm
Pressure plate warp	- service limit	0.15 mm

BRAKES

Type		Ventilated front & rear discs. Opposed piston alloy front calipers. Single piston sliding rear calipers.
Disc material	- prior June '98	Aluminium metal matrix
	- from June '98	Cast iron
Disc size	- front & rear	282.5 mm
Operation		Tandem master cylinder
Parking brake		Cable operation of rear calipers, self adjusting for pad wear.

STEERING

Type	Rack and pinion
Turns, lock to lock	2.4
Gear ratio	15.8:1

FUEL CONSUMPTION

93/116/EC	- std	- urban	9.6 l/100 km (29.4 mpg)
		- extra urban	5.7 l/100 km (49.6 mpg)
		- combined	7.1 l/100 km (39.8 mpg)
		- CO_2	168 g/km
	- 111S	- urban	9.9 l/100 km (28.5 mpg)
		- extra urban	5.9 l/100 km (47.8 mpg)
		- combined	7.3 l/100 km (38.6 mpg)
		- CO_2	174 g/km

CHASSIS

SECTION AF - M111

	Sub-Section	Page
General Description	AF.1	3
Chassis Straightness Check	AF.2	4
Rear Subframe & Longerons	AF.3	5

ELISE CHASSIS UNIT

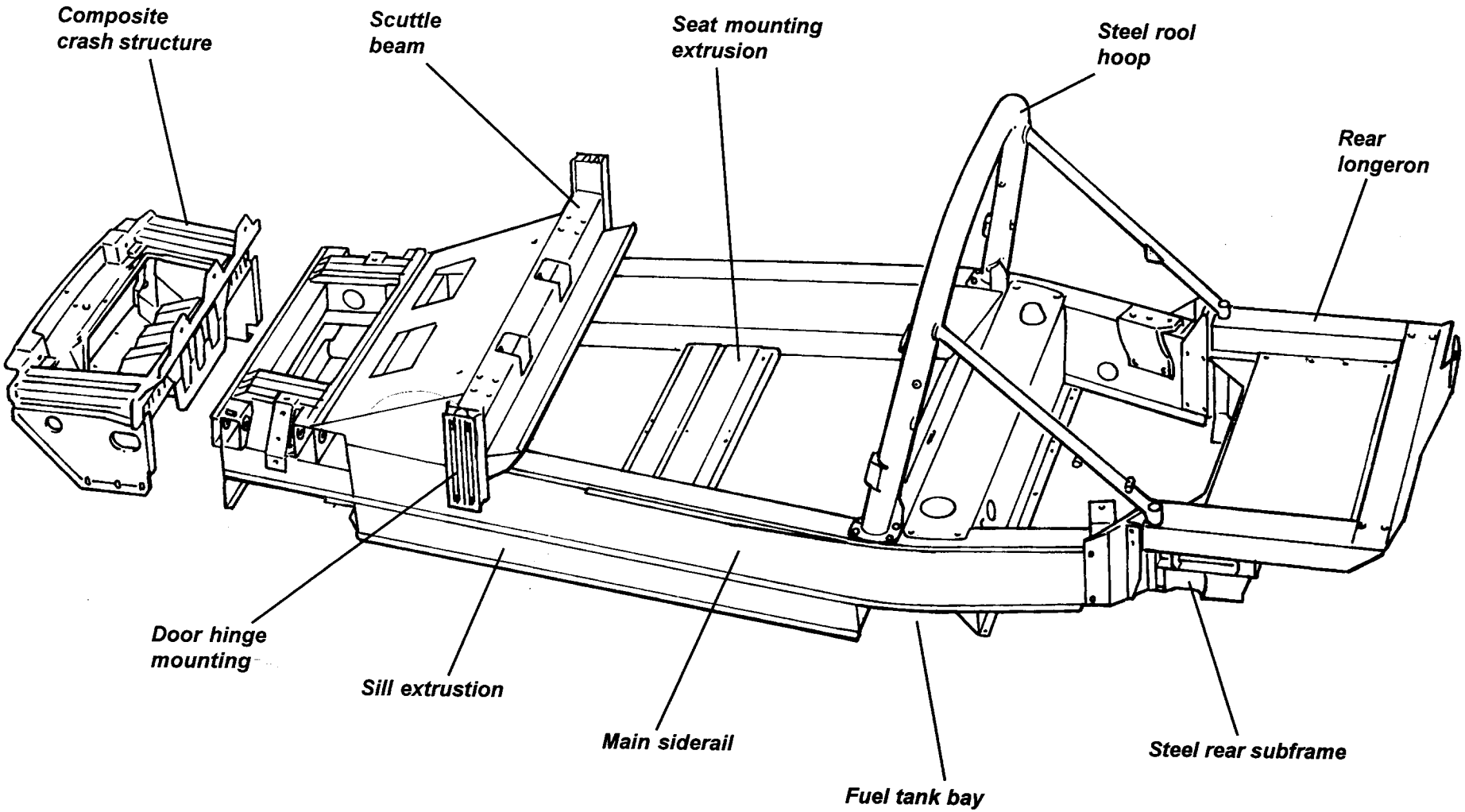

AF.1 - GENERAL DESCRIPTION

The chassis frame of the Lotus type M111 Elise is constructed primarily from aluminium alloy extrusions and formed alloy sheet, with the various sections bonded together using an epoxy adhesive with secondary drive-in fasteners. The basic chassis unit includes the passenger cell, front suspension mountings, fuel tank housing, and mid mounted engine bay, with a fabricated sheet steel rear crossmember bolting to the rear of the engine bay to provide rear suspension mountings and rear body support, and a tubular steel roll over bar bolted to the top of the chassis structure for additional occupant protection. The cabin rear bulkhead, body sills (inc. 'A' and 'B' posts), front energy absorbing crash structure and scuttle/windscreen mounting frame, are all constructed from glass fibre composite and are bonded to the chassis structure using an elastomeric adhesive. The front and rear body sections are each single piece composite mouldings, fixed to the chassis structure with threaded fasteners.

Two main chassis siderail extrusions, 210mm deep and 100mm wide, run along each side of the passenger compartment between the front and rear suspension mountings, splaying outwards towards the rear until the fuel tank crossmember behind the passenger cell. At this point, the siderails curve inwards around each side of the engine bay to provide platforms for the engine mountings. The passenger cell is further stiffened by sill extrusions secured beneath the siderails, with the flat floor panel reinforced with ribbed transverse channel sections running across the inside of the tub, which also provide seat mountings. At the rear of the passenger cell, an open bottomed crossmember uses a detachable, swaged, closing panel to house the steel fuel tank, with a further extruded crossmember joining the bottom of the siderails at the rear of the fuel tank bay, and providing pick up points for the front pivots of the rear lower wishbones. Note that the fuel tank bay closing panel contributes to the structural integrity of the chassis, such that the vehicle should not be operated without the panel fitted.

The rear ends of the siderails are joined behind the engine bay with a galvanised sheet steel fabricated subframe which provides mountings for the rear suspension pivots, engine rear stabiliser and exhaust muffler. Onto each top side of the subframe is bonded and rivetted a box section extrunded alloy longeron, which extends rearwards to provide rear body support. Enhanced stiffness of the chassis rear section and additional occupant protection is provided by a tubular steel roll over bar which bolts to the top of the siderails alongside the fuel tank bay, with bracing struts running from each top corner of the bar to the rear ends of the siderails.

At the front of the passenger compartment, four transverse extrusion beams are used to provide mountings for the front suspension pivots, and house the steering rack, with an upright section used each side to anchor the top of the spring/damper unit. A extruded floor section is used to reinforce this area, with the space between the front ends of the siderails housing the heater unit and battery. An extruded scuttle beam links the tops of the siderails, mounts the steering column, and is reinforced by a panel joining this beam with the steering rack crossmember, the panel also serving to mount the pedal box. Each end of the scuttle beam carries a vertical extrusion to mount the door hinge pillar.

To the front end of the chassis is bonded a glass fibre composite 'crash structure' which incorporates tubular sections designed to dissipate collision energy and control the rate of deceleration sustained by the occupants. Ducting and mountings for the horizontally positioned engine cooling radiator are also incorporated in this structure.

The bonded and rivetted alloy chassis structure described above is considered a non-serviceable jig built unit to which no structural repairs are approved. Superficial, cosmetic, or non-structural localised damage may be repaired as necessary, but in the case of accident damage resulting in significant bending, tearing or distortion of the aluminium chassis, such that the specified suspension geometry cannot be achieved by the standard range of suspension adjustment provided, the recommended repair is to renew the partial body assembly, which comprises the chassis and roll over bar together with jig bonded composite rear bulkhead, body sills, windscreen frame and crash structure, and the radiator feed and return pipes, heater pipes, battery cable and clutch pipe which are all routed within the sill panels.

AF.2 - CHASSIS STRAIGHTNESS CHECK

In the absence of visual damage, the chassis may be checked for twist or distortion by utilising the tooling holes in the underside of the main side rails. If computer processed laser measuring equipment is not available, manual checks can be made with reference to an accurately level ground plane, e.g. an accurately set and maintained suspension geometry ramp/lift. Position the car on the lift, and proceed as follows:

1. Identify the tooling holes in the lower surface of each chassis main side rail. At the front end, between the suspension wishbone pivots, and at the extreme rear end of each rail.

2. Measure the height of each tooling hole above the reference plane and use jacks to adjust the height of the chassis in order to equalise any three of these dimensions.

3. Measure the deviation of the fourth dimension from the other three.
   Maximum service deviation = ± 2.0 mm.

4. Repeat operations (2) and (3) for each combination of corners to result in four values for the 'fourth' dimension deviation. If any one of these exceeds the service specification, the chassis should be considered damaged and replaced by a partial body assembly.

FRONT

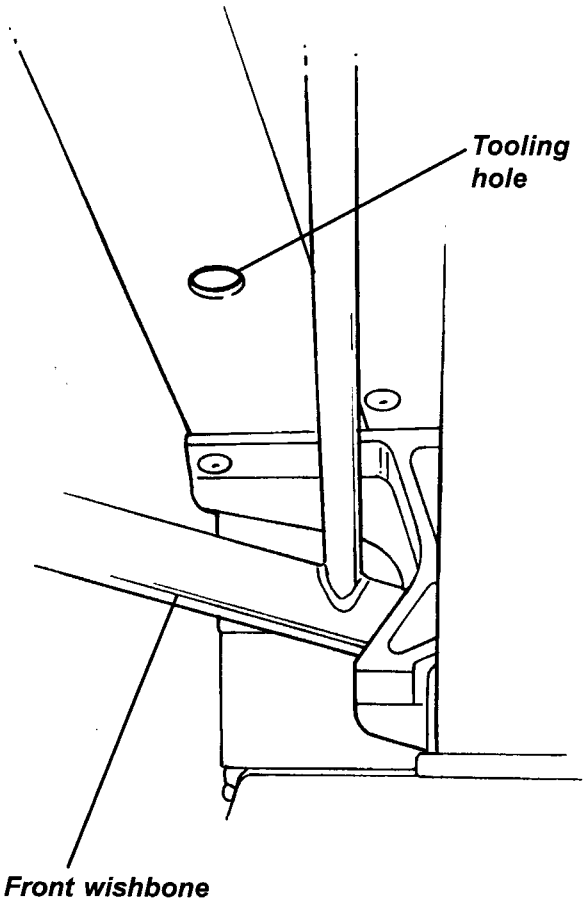

REAR

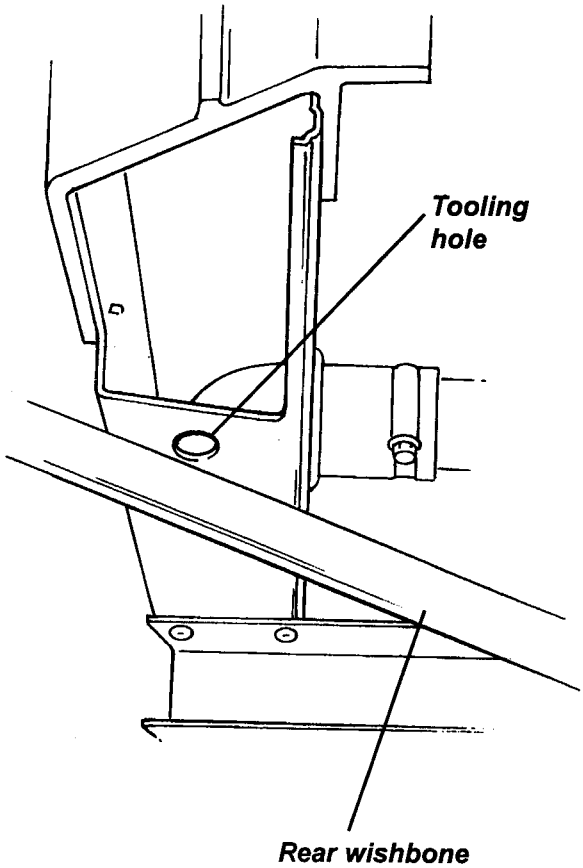

a27

AF.3 - REAR SUBFRAME & LONGERONS

The rear ends of the chassis siderails are linked by a fabricated sheet steel subframe which provides rear suspension mountings, and an anchor point for the engine rear steady bar. At each side, an extruded box section 'longeron' is rivetted and bonded to the top surface of the subframe, and extends rearwards to provide rear body support. On cars built prior to September '98, an aluminium sheet floor is rivetted between the longerons, with a boot front bulkhead bolted to the front edge of the floor. On later cars, the floor panel and bulkhead are replaced by a 'boot box' moulded integrally with the rear clamshell.

To remove rear subframe assy.

1. Remove the rear clamshell (see sub-section BN.5).

2. Remove exhaust catalytic converter and muffler, and if necessary, drill out the rivets and remove the exhaust heatshield.

3. Disconnect the parking brake cables and rear brake hydraulics, and remove both rear suspension assemblies complete with driveshafts.

4. Release the electrical components mounting plate from the LH longeron.

5. Release the engine rear steady arm from the subframe.

6. Release the roll over bar stays from the damper top mount tapping block, and remove the two bolts each side securing the subframe to the chassis flange. Withdraw the subframe and longerons as an assembly, together with the floor panel on early cars.

Note that it is not generally possible to separate a rear longeron from the subframe without damage to one or both components. If a longeron is damaged but the subframe is to be re-used, the longeron must be cut from the subframe.

Fitting rear subframe

When bolting the subframe at each side to the chassis rail rear flange, ensure that the anti-corrosion shim plate is interposed. The lower fixing bolts should be inserted from the rear, and the upper bolts from the front. Torque tighten the bolts to 45 Nm.

If longerons are already fitted to the subframe, fit the rear damper mount tapping block to the chassis before fitting the subframe and after bolting up the subframe, secure the roll over bar stays using the M10 caphead screw and washer at each side to pass through the longeron and into the damper mount tapping block. Torque tighten to 45 Nm.

If no longerons are fitted to the subframe, fit the subframe to the chassis, and then fit the longerons to the subframe as follows:

Fitting rear longerons

1. Ensure that at each side, the top surface of the subframe is free of zinc flashing, including the outside top lip of the subframe. Dry fit the longeron to ensure that the channel in the extrusion fits onto the outside edge of the subframe, with the longeron lying flat on the subframe top surface. The damper mounting tapping blocks may be fitted before the longerons for easier access, or alternatively, to ease fitment of the longerons, the tapping blocks may be fitted afterwards by feeding down the inside of the longeron.

2. Clean the mating surfaces on the subframe and longeron using Betawipe VP 04604 (A082B6150V) as directed in sub-section BM.5.

3. Prime the whole of the mating faces of the subframe and longeron with Betaprime 5404 (A082B6337V) as directed in sub-section BM.5.

4. Apply a 'zig-zag' bead of Betaseal 1701 (A082B6281F) or Betamate E2400 (A082B8415V) to the primed surface of the subframe as detailed in sub-section BM.5.

5. Hook the longeron over the edge of the subframe and onto the adhesive and slide fully forward until aligned with the rivet holes and roll over bar brace fixing hole in the tapping block. If an aluminium boot floor is used (i.e. pre 'boot box'), fit the floor into position between the longerons before inserting the three 6.4 mm (1/4") rivets each side to secure the longeron (and boot floor if applicable) to the subframe. Fit the M10 caphead screw and washer to secure the roll over bar stay and longeron to the damper mounting tapping block.

6. Fit the exhaust heatshield, electrical component plate and other components in reverse order to removal.

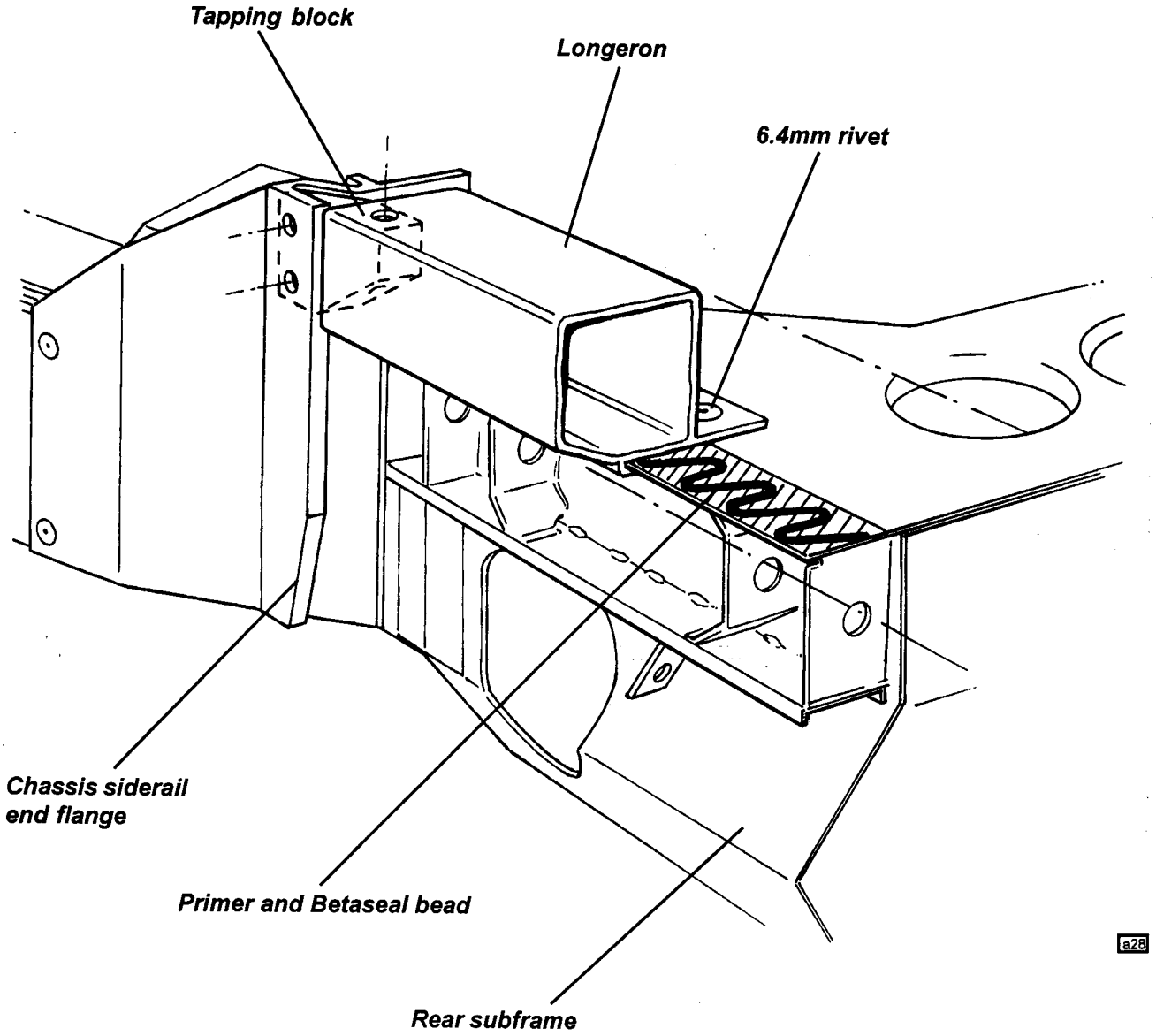

BODYCARE & REPAIR

SECTION BM - M111 ELISE

	Sub-Section	Page
General Description	BM.1	3
Lotus Composite Body Features	BM.2	3
Bodycare	BM.3	3
Accident Damage Assessment	BM.4	5
Body Panel Bonding Materials	BM.5	6
Replacement of Bonded-On Panels - General	BM.6	9
Front Crash Structure	BM.7	10
Windscreen Frame	BM.8	12
Sill Panels	BM.9	16
Rear Bulkhead Panel & Capping Rail	BM.10	18

Principal Body Components

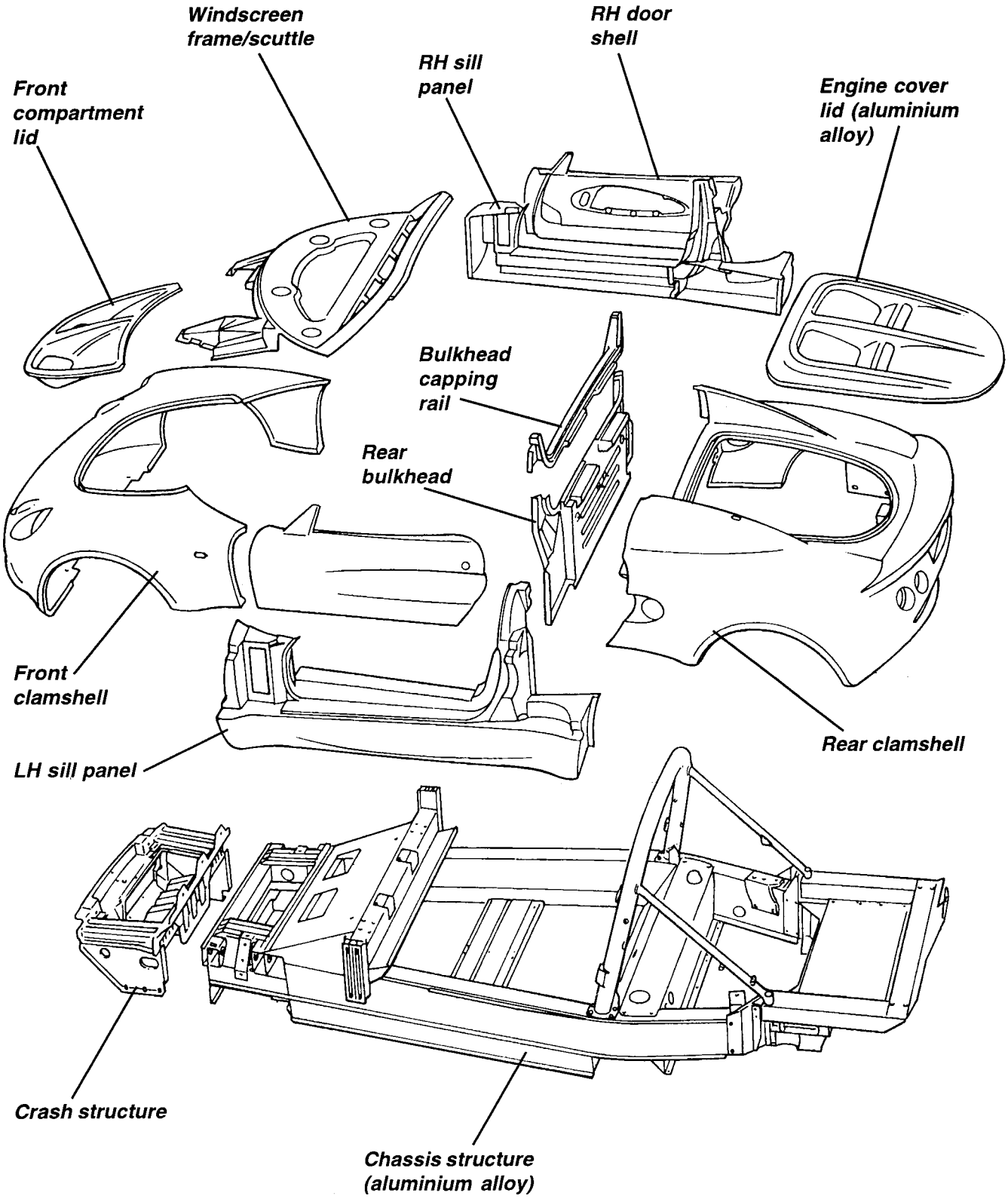

b277

BM.1 - GENERAL DESCRIPTION

The body panels of the Lotus Elise are constructed of composite materials, with the external panels not being required to contribute to chassis rigidity. The panels are attached to the aluminium chassis and/or other body panels either by elastomeric polyurethane adhesive, or in the case of the front and rear clamshells, are bolted on for ease of dis-assembly and access to chassis parts. The major panels are manufactured by the VARI (Vacuum Assisted Resin Injection) process, using a low profile resin and are of a nominal 2 mm thickness. The windscreen frame incorporates foam beams to create closed box sections for optimum strength and a 'crash structure' bonded to the front of the chassis incorporates longitudinal box sections to provide specific crush characteristics and absorb crash impact by progressive collapse. This structure also acts as a mounting and duct for the engine cooling radiator which is mounted horizontally on its top surface.

BM.2 - LOTUS COMPOSITE BODY FEATURES

Composite structures have the ability to absorb high impact loads by progressive collapse, with impact damage being localised. In vehicle accidents this feature protects the occupants from injurious shock loads and greatly reduces the danger of entrapment by deformation of steel body panels. This behaviour also facilitates repair by either replacing the damaged bonded or bolt on panels, and/or integrating a replacement section with the undamaged area, using recognised approved methods which restore the panel to its original condition without residual strain or distortion.

The manufacturing process enables the thickness of composite mouldings to be varied in order to provide efficient structures of high strength and low weight. Composites will not corrode, so the strength of composite components is retained regardless of age, unless physical damage is sustained. On the Elise, the body construction utilises a single moulding for the whole of the nose and front wings, and a second one piece moulding for the whole of the rear body aft of the doors. These two mouldings are fixed using threaded fasteners to permit easy removal for access to chassis or powertrain components, or to allow simple and economic accident repair. Other composite mouldings include the door shells, sills, front compartment lid, windscreen frame and rear bulkhead, some panels being bonded to the aluminium alloy chassis with an elastomeric adhesive.

The outer surface of a composite panel is sealed by a thin layer of 'gel coat'. If the panel is deflected beyond its limits of flexibility the gel coat will be overstressed and cracks will result, although the panel will return to its original shape. A steel panel similarly treated would become dented or deformed. The cracking may be confined to the surface gel coat with no reduction in panel strength, but if the damage is more severe the composite structure below the gel coat may be weakened. Localised repairs can be made in either case. Gel cracks may not appear immediately after overstressing, because the effect can be masked by the flexibility of the paint finish which covers the gel coat, and in some instances can take as long as three months to appear. Causes of gel cracks include:

- Vehicle collision;
- Sitting, leaning heavily or pushing on the body or any composite panel;
- Knocking doors against obstructions when opening;
- Dropping objects onto a panel;
- Allowing unrestrained items to roll about in a luggage compartment;
- Closing the bonnet or boot lid onto projecting objects, e.g. luggage or tools;
- Applying excessive force to parts attached to composite panels e.g. mirrors, locks, aerial etc. (action by vandals).
- Incorrect jacking.

BM.3 - BODYCARE

The acrylic enamel paint finish of the Elan is extremely resistant to all normal forms of atmospheric attack. Following the simple maintenance procedure summarised below will help retain the gloss, colour and protective properties of the paint throughout the life of the vehicle. However, car finishes are not immune to damage, and amongst the more common causes of deterioration are:

- Atmospheric contaminants; dust, soot, ash, and acidic or alkaline aerosol mist can chemically attack paint.
- Abrasion; blowing sand and dust, or a dirty washing cloth.
- Tree sap and insect fluids; can form a water-insoluble polymer that adheres to the paint.
- Bird droppings; highly acidic or alkaline, they can chemically etch the paint.
- Leaves; contain tannic acid which can stain light finishes.

Washing - Caution: Lotus does NOT recommend that the Elise is subjected to a mechanical (automatic) car wash as some types of brushes used in these devices may cause scratching of the flexible rear window, and accelerated ageing of the roof fabric. The car should be hand washed using the following instructions;

General: Many contaminants are water soluble and can be removed before any harm occurs by thorough washing with plenty of luke warm water, which includes a proprietary car wash additive (household detergent can remove wax and accelerate oxidation). Frequent washing is the best safeguard against unseen contaminants, at the same time ensuring the regular removal of dirt, dust and traffic film. Wash in the shade, and use a cotton chenille wash mitt or a sponge rinsed frequently to ensure no entrapment of dirt particles. Use a straight back and forth washing motion to avoid swirled micro scratches and rinse thoroughly.

Soft Top Roof:

1. Careful vacuuming of the soft top before washing may be helpful in removing excess dust and other foreign particles.
2. Wash in partial shade rather than strong sunlight, and wet the whole car before tackling the soft top.
3. Use a sponge (a chamois or cloth will leave lint, and a brush may abrade the threads) to apply a mild **soap** solution of lukewarm water. Do NOT use a detergent.
4. To avoid rings or spots, wash the entire top uniformly and let the soapy solution remain on the fabric for 2 to 5 minutes.
5. Rinse the whole car to remove all soap from the fabric and to prevent streaking on the car bodywork.
6. Remove surface water with a sponge and allow to air dry in direct sunlight. Ensure that the roof is fully dry before stowing, as prolonged stowage of a wet or damp roof will promote rotting of the fabric.

Keeping the soft top clean by regular washing will enhance the life and maintain the appearance of the roof, and facilitate subsequent cleaning. The use of stronger cleansers should be left to professionals experienced in handling this type of fabric as discoloration and degradation of the special protective inner layer may result. The application of wax finishes, dressings or preservatives will cause stains which are difficult to remove and therefore should be avoided.

Paintwork Polishing

Eventually some loss of gloss, and an accumulation of traffic film, will occur. At this stage, after the normal washing, a polish with a good quality liquid polish will restore the original lustre of the paint film.

Higher gloss of the paint film, and added protection against contamination, can be obtained by wax polishing, but it must be remembered that a wax polish can only be used successfully on a clean surface, and that the previous application must first be removed with white spirit or a liquid polish cleaner before re-waxing.

Ventilation

Water lying on the paint surface for lengthy periods will penetrate the paint film. Although the effects will not be visible immediately, this will in fact cause a deterioration in the protective properties of the paint film.

If a car is garaged, good ventilation must be provided, otherwise storage outside on a hard standing or under a carport is preferable.

Windscreen

When washing the windscreen, take care to lift the wiper blade only a small distance from the glass in order not to damage the wiper arm mechanism. Wash the wiper blade with clean water.

Alloy Wheels Cleaning

It is recommended that these are washed with the preparation as is used to wash the bodywork. Use a brush having only nylon bristles. During the winter months, particularly when salt has been used on the roads for the dispersal of snow and ice, remove all wheels, and wash thoroughly to remove all accumulated road filth

from wheels and tyres.

Upholstery Cleaning

Cloth Upholstery: Normal cleaning consists of an occasional light wipe over with a cloth dampened in a mild soap and water solution; it is important that the cloth is only dampened, not soaked. Alternatively, a proprietary upholstery cleaner may be used.

Leather Upholstery: The leather should be wiped over occasionally with a cloth dampened in warm soapy water. Use a mild, non-caustic toilet soap or soap flakes. Repeat the operation using a fresh cloth and water only, but avoid flooding the leather. Finish by drying and polishing with a soft dry cloth. The manufacturers of the leather do not recommend the use of any hide 'food', and prohibit the use of petrol or detergents, furniture creams and polishes.

Senotex Coated Trim: Some areas of the interior, including the scuttle and rear bulkhead are finished with a grey, textured 'Senotex' coating. Stains may be removed using a proprietary upholstery cleaner and a soft bristle brush. Finish by wiping over with a dry soft cloth.

Seat Belts Cleaning

The seat belts should be sponged with warm water and allowed to air dry naturally. Do not use chemical cleaners and never attempt to bleach or dye the webbing.

BM.4 - ACCIDENT DAMAGE ASSESSMENT

The repair method to be employed in the rectification of accident damage to composite panels, is to be assessed reletive to the particular panel and its method of attachment:

Bolt-on Panels:
- Front Clamshell;
- Rear Clamshell;
- Door Shells;
- Front Services Compartment Lid. (Note that the engine cover lid is aluminium)

These panels are secured by threaded fasteners and are easily removed for access to the back of any damaged area for repair by conventional composite techniques. Instructions for the removal and refitment of the front and rear clamshells and doors, are contained in section BN.

Bonded-on Panels:
- Windscreen Frame;
- LH & RH Sill Panels;
- Front Crash Structure;
- Rear Bulkhead & Capping Rail.

These panels are bonded to the chassis or to other panels using a flexible polyurethane adhesive which must be cut before the panel may be removed. In some cases, it may be necessary to partially remove another panel before the subject panel can be released. It is not generally economic to attempt to remove a bonded panel intact for later re-fitment.

The integrity of the front crash structure is crucial to the safety of the car in a frontal collision, and it is recommended not to attempt any major repair of this component. The damaged structure should be cut from the front of the chassis, and a new assembly bonded into position.

The sill panels include the 'A' and 'B' posts, and involve much labour time to replace. Localised repairs should be performed whenever possible, although access to the inside of the panels is not freely available.

The shape and positioning of the windscreen frame is crucial to the fit of the windscreen and sealing of the soft top roof, such that structural repairs should not generally be considered.

Note that if damage is such as to require replacement of the chassis, replacement chassis assemblies are provided already jig assembled with the bonded body panels of rear bulkhead and capping rail, sills, windscreen frame and front crash structure.

BM.5 - BODY PANEL BONDING MATERIALS

The materials used for bonding the body panels are manufactured by Gurit-Essex, and in order to maintain the structural integrity of the vehicle, and in the case of the front crash structure, the safety, it is most important to use only the specified materials. The surface preparation and cleaning and priming operations are crucial to the performance of the adhesive, and must be followed in detail. The products to be used depend on the surface (substrate) onto which they are applied, and the following list identifies each application:

Anodised aluminium (e.g. chassis and components)

Cleaner:	Betawipe VP 04604	Lotus part no. A082B6150V
Primer:	Betaprime 5001	Lotus part no. A100B6009V
Adhesive:	Betaseal 1701	Lotus part no. A082B6281F
or	Betamate E2400	Lotus part no. A082B8415V

Unpainted or painted composite

Cleaner:	Betaclean 3900	Lotus part no. A100B6008V
Primer:	Betaprime 5404	Lotus part no. A082B6337V
Adhesive:	Betaseal 1701	Lotus part no. A082B6281F
or	Betamate E2400	Lotus part no. A082B8415V

Zinc plated and passivated steel

Cleaner:	Beatclean 3900	Lotus part no. A100B6008V
Primer:	Betaprime VP 01706 A+B	Lotus part no. A100B6070V
Adhesive:	Betaseal 1701	Lotus part no. A082B6281F

Glass

Cleaner:	Betawipe VP 04604	Lotus part no. A082B6150V
Primer:	Betaprime 5001	Lotus part no. A100B6009V
Adhesive:	Betaseal 1701	Lotus part no. A082B6281F
or	Betamate E2400	Lotus part no. A082B8415V

Uncoated Lexan/Perspex

Cleaner:	Abrasion & dry wipe	
Primer:	Betaprime 5404	Lotus part no. A082B6337V
Adhesive:	Betaseal 1701	Lotus part no. A082B6281F
or	Betamate E2400	Lotus part no. A082B8415V

Residual adhesive (i.e. rebonding to surface after cutting off old panel)

Cleaner, primer & re-activator	Betawipe 4000	Lotus part no. A082B6355V
Adhesive:	Betaseal 1701	Lotus part no. A082B6281F
or	Betamate E2400	Lotus part no. A082B8415V

Applicator Bottle

An applicator bottle is available for use with some cleaners and primers, and has a disposable felt pad which should be changed regularly to minimise surface contamination:

Applicator bottle	A000Z1071F
Cap	A082B6353S
Felt pad	A082B6354S

Product Usage

BETAWIPE VP 04604 (A082B6150V):

Description: Activator and cleaning agent used to promote adhesion to the substrate surface. Supplied in a 250ml aluminium container with a YELLOW coloured cap.

Application:
- Wipe on/wipe off type.
- Pour Betawipe VP 04604 into applicator bottle, and immediately refit the yellow cap onto the container.

- Push the applicator head onto the bottle, and fit the felt pad.
- Wet out the felt pan by inverting the applicator bottle and gently squeezing the sides.
- Wipe the pad over the substrate surface using minimal pressure to wet the surface.
- Immediately wipe off the activated/cleaned surface using a clean fibre free cloth, and discard.

Notes:
- If the substrate is very dirty, first wipe off the surface with a clean fibre free cloth and discard.
- Do not leave the caps off Betawipe containers. A milky colour indicates moisture absorption, and the material should be discarded.
- Only decant a sufficient quantity of Betawipe for the job concerned, and never pour material back into the container from the applicator bottle.
- Change the felt pad at regular intervals to reduce surface contamination.

BETACLEAN 3900 (A100B6008V)

Description: Degreaser and cleaning agent used for the removal of contamination from the substrate sur face. Supplied in 1 litre aluminium container with a BLACK coloured cap.

Application:
- Wipe on/wipe off type.
- When substrate is very dirty, first wipe off the surface with a clean fibre-free cloth and discard.
- Dampen a fibre-free cloth with Betaclean 3900, and immediately replace the black cap.
- Thoroughly clean the substrate surface with Betaclean and discard the cloth.
- Wipe off the substrate with a clean fibre-free cloth and discard.

BETAWIPE 4000 (A082B6355V)

Description: Cleaning agent which acitvates the old adhesive layer to accept new adhesive. Supplied in 250 ml aluminium containers with a BLUE cap.

Application:
- The residual adhesive bead should be cut with a scalpal to leave an even thickness of approximately 1 to 2 mm.
- Dampen a fibre-free cloth with Betawipe 4000 and immediately replace the blue cap.
- Thoroughly clean the substrate surface with Betawipe and discard the cloth. Do not wipe off.
- Allow 2 - 3 minutes flash off time before applying adhesive.

BETAPRIME 5001 (A100B6009V)

Description: Adhesion promotor used to maximise the performance of the bonding between the cleaned and/or activated surface and the adhesive compound. Supplied in 250 ml aluminium container with GREEN coloured cap.

Application:
- Two steel balls inside the container are provided to assist mixing of the contents when shaken. Prior to decanting Betaprime 5001, shake the container for at least 60 seconds to disperse the solid content of the material into suspension.
- Pour the primer into the applicator bottle and immediately replace the green cap.
- Wet out the felt pan by inverting the applicator bottle and gently squeezing the sides.
- Wipe the pad over the activated/cleaned substrate surface to apply a continuous film of primer.
- Allow to dry for a minimum of 15 minutes before applying adhesive. If adhesive is not applied with 72 hours, wipe on/wipe off with Betawipe VP 04604.

Notes:
- The appearance of the primed areas should be deep black in colour with no streaks or voids. To achieve this appearance, apply in smooth continuous uni-directional movement, not short backward and forward movements. The latter technique results in inconsistent film build. Rework any poor areas after 5 minutes (tack time), applying in the same direction.
- Replace the felt pad if moisture absorption results in hardening.
- Never return unused Betaprime back into the aluminium container.

BETAPRIME 5404 (A082B6337V)

Description: Adhesion promotor used to maximise the performance of the bonding between the cleaned and/or activated surface and the adhesive compound. Supplied in 250 ml aluminium container with RED coloured cap.

Application:
- Two steel balls inside the container are provided to assist mixing of the contents when shaken. Prior to decanting Betaprime 5001, shake the container for at least 60 seconds to

disperse the solid content of the material into suspension.
- Pour the primer into the applicator bottle and immediately replace the green cap.
- Wet out the felt pan by inverting the applicator bottle and gently squeezing the sides.
- Wipe the pad over the activated/cleaned substrate surface to apply a continuous film of primer.
- Allow to dry for a minimum of 15 minutes before applying adhesive. If adhesive is not applied with 24 hours, re-activate by applying a further coat of Betaprime 5404.

Notes: - The appearance of the primed areas should be deep black in colour with no streaks or voids. To achieve this appearance, apply in smooth continuous uni-directional movement, not short backward and forward movements. The latter technique results in inconsistent film build. Rework any poor areas after 5 minutes (tack time), applying in the same direction.
- Replace the felt pad if moisture absorption results in hardening.
- Never return unused Betaprime back into the aluminium container.

BETAPRIME VP 01706 A+B (A100B6070V)

Description: Adhesion promotor used to maximise the performance of the bonding between the cleaned and/or activated surface and the adhesive compound. Supplied in 250 ml aluminium containers of component A and component B.

Application: - Thoroughly shake component A container to disperse solid material. Remove the lid from the component A container and scrape any sediment from the botton of the container. Replace the container lid and thoroughly shake again to disperse the solid content.
- Pour the required amount of component A into a clean container, and add the same volume of component B. Replace lids immediately. Thoroughly mix the two components for 45 seconds minimum.
- Leave the mixed components to stand for 30 MINUTES. (Discard if unused after 8 hours)
- Pour the primer into the applicator bottle and wet out the felt pan by inverting the bottle and gently squeezing the sides.
- Wipe the pad over the cleaned substrate surface to apply a continuous THIN film of primer: A thin, almost transparent film is all that is required. No attempt should be made to attain a completely opaque covering.
- Allow to dry for a minimum of 4 HOURS, before applying adhesive.

Notes: - To achieve a continuous thin film of VP 01706, apply in a smooth continuous uni-directional movement, not short backward and forward movements. The latter technique results in in consistent film build.
- Replace the felt pad if moisture absorption results in hardening.
- Never return unused Betaprime back into the aluminium container.

BETASEAL 1701 (A082B6281F)

Description: One component moisture curing adhesive, providing high strength, permanently elastic bonds between various substrates. Supplied in 300 ml aluminium cartridge.

Application: - Remove the cartridge end ensuring there is no damage to the reinforcing sleeve.
- Pierce the neck of the cartridge and screw on the applicator nozzle. Cut the nozzle end to the required diameter and shape.
- Fit the cartridge into an air assisted gun, and extrude a smooth, even and continuous bead of Betaseal to the previously prepared substrate.
- Assemble the joint within 5 MINUTES.

Notes: - If the adhesive has to be touched or manipulated for any reason, use only *wetted* fingers.

BETAMATE E2400 (A082B8415V)

Description: Two component chemically curing adhesive, providing high strength, permanently elastic bonds between various substrates. Supplied in 220 and 450 ml aluminium cartridges.

Application: - An electrically driven Betagun Mk 11 is required to mix and extrude Betamate E2400. Refer to the operating instructions supplied with the gun.
- Extrude a smooth, even and continuous bead of Betamate to the previously prepared substrate.
- Assemble the joint within 5 MINUTES.

Notes: - If the adhesive has to be touched or manipulated for any reason, use only *wetted* fingers.

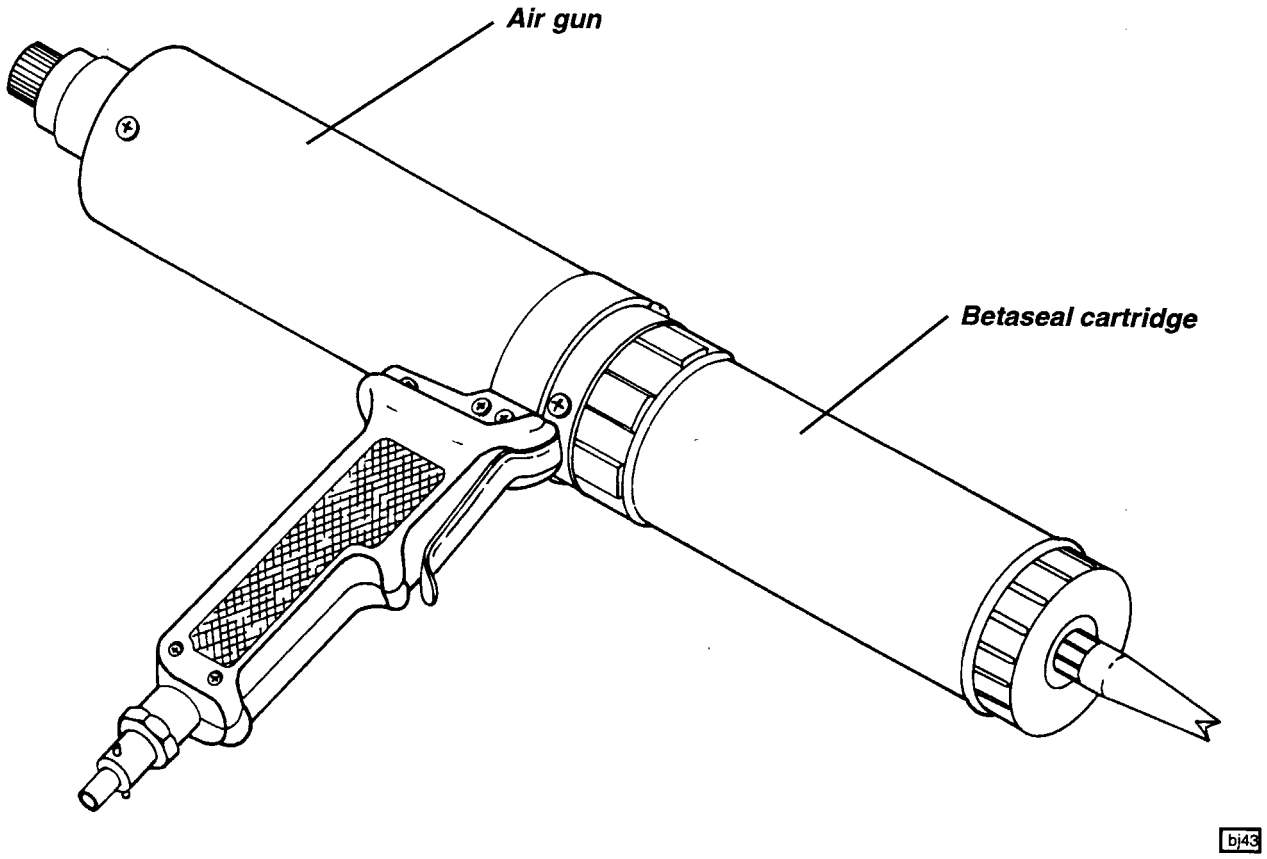

BM.6 - REPLACEMENT OF BONDED-ON PANELS - GENERAL

Bonded body panels are secured using the Gurit-Essex products 'Betaseal' or 'Betamate', which are flexible polyurethane adhesives which must be cut in order for a panel to be removed. The recommended method of adhesive cutting is with the use of a pneumatic tool such as the Chicago Pneumatic CP838 Pneu-Nife which uses a range of differently shaped cutting knives to which is imparted a vibrating action. This tool may also be used to remove windscreens.

Supplier:	Chicago Pneumatic, Utica, New York 13501, USA.
Catalogue no.:	CP838 Pneu-Nife
Recommended air pressure:	60 - 90 PSIG (4.0 - 6.2 bar)
Tool air inlet:	1/4" NPTF, 3/8" min. hose size

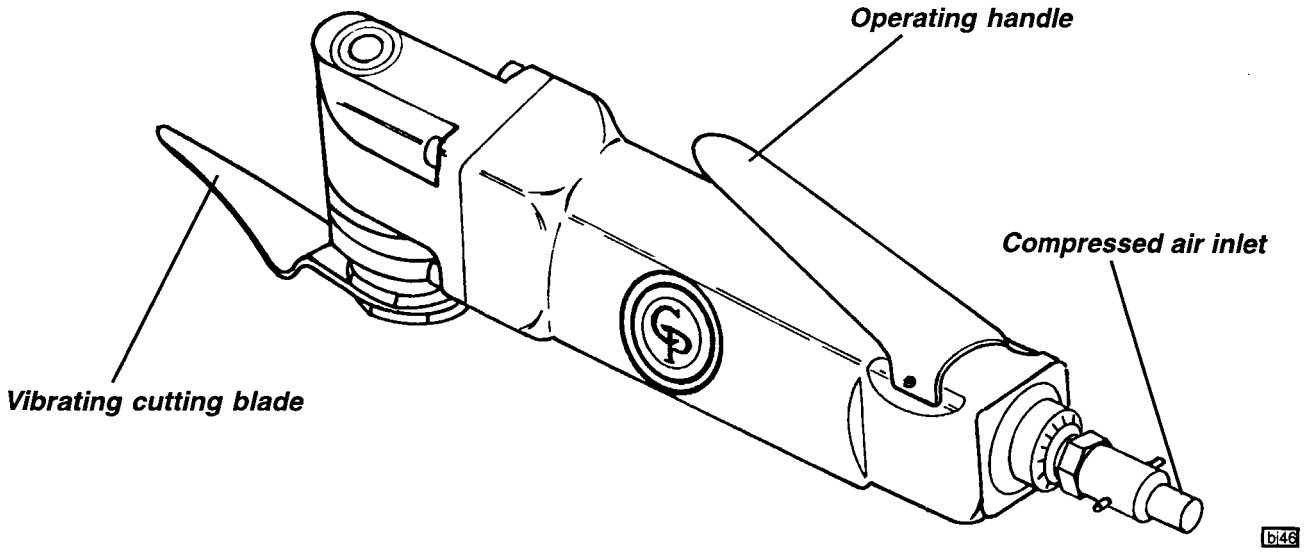

It is not generally practical to remove a bonded panel for later refitment, such that when necessary, the panel can be cut away for better access to the bonded joint. It is not necessary to remove all traces of sealant from the joint faces on the remaining panels or chassis, but any remaining sealant must be securely bonded and no thicker than 1 mm or the fit and joint gaps will be upset. It is essential always to follow the cleaning/ priming/bonding operations meticulously if sufficiently strong and durable bonds are to be obtained. Always use the specified materials.

BM.7 - FRONT CRASH STRUCTURE

The front crash structure consists of an upper and lower moulding bonded together and supplied only as an assembly. It is bonded to the front face of the chassis, and is braced by a flat alloy undershield screwed to the bottom front edge of the chassis, and to each lower side of the crash structure. The unit also acts as a ducting for the engine cooling radiator and a.c. condenser (if fitted) which are mounted horizontally on its top surface in a bolted-on composite radiator housing. Longitudinal tubes formed in the construction are designed to produce a particular crush characteristic in order to control the rate of deceleration of the vehicle occupants in a frontal collision.

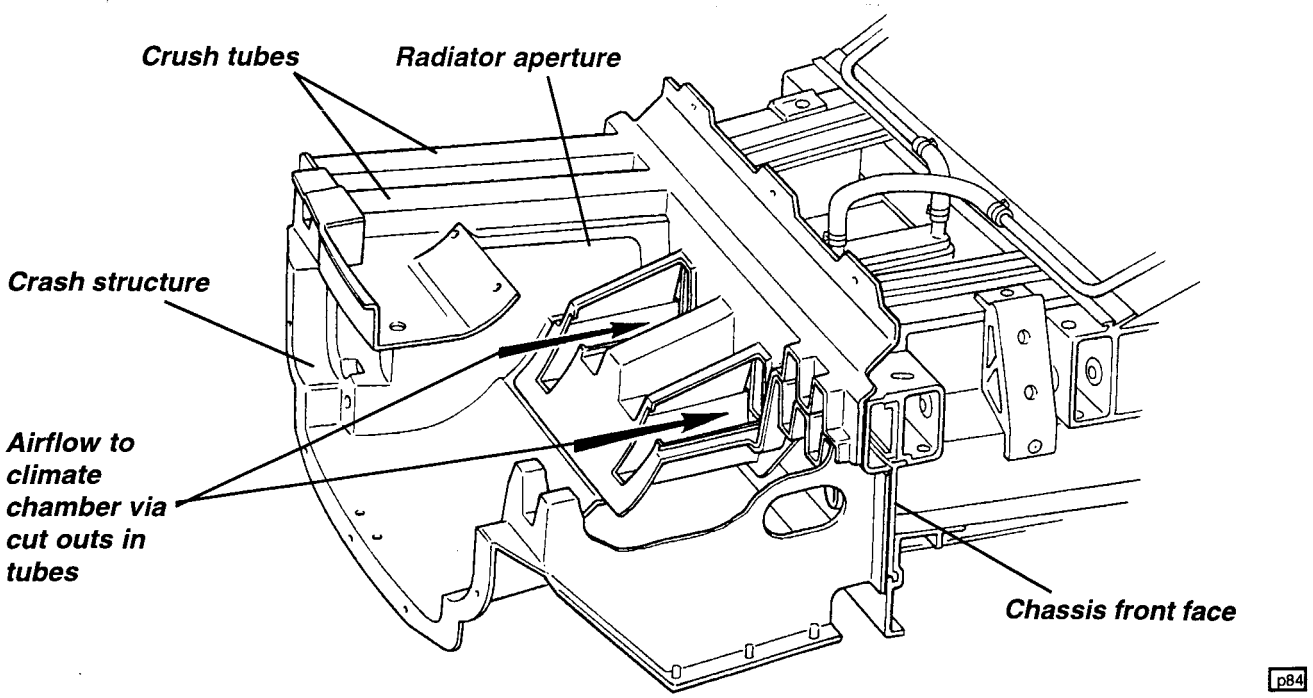

To remove the structure:

- Remove the front clamshell (see sub-section BN.4).
- Remove the front undershield by releasing the three screws securing each lower side of the structure to the shield, and the three screws securing the shield to the front lower edge of the chassis.
- Drain the coolant and remove the radiator and pipework (see section KF).
- Remove the driving lamps (if fitted) from the crash structure, along with the towing strut, horn and wiring harness.
- Use a seal cutting knife to cut the bond between the structure and the front face of the chassis. For access to some of the bonding areas, it may be necessary to cut away some parts of the structure, rendering the unit unsuitable for refitment. Take care not to damage the surface of the chassis when cutting the adhesive.
  It is not necessary to remove all traces of old adhesive from the chassis, but a uniform surface must be available for the new adhesive bead. The remaining adhesive must be securely bonded and be cut with a scalpal blade to leave an even thickness of 1 - 2 mm.

Prepare the new structure for bonding:

- Dry fit the new structure to the chassis, and check that a good fit is achieved. Fettle the structure or remove old adhesive as necessary until the fit is satisfactory.
- Re-acivate the surface of the old adhesive on the chassis using Betawipe 4000 (see sub-section BM.5), and clean and prime the bonding area on the new crash structure using Betaclean 3900 and Betaprime 5404 (see sub-section BM.5).

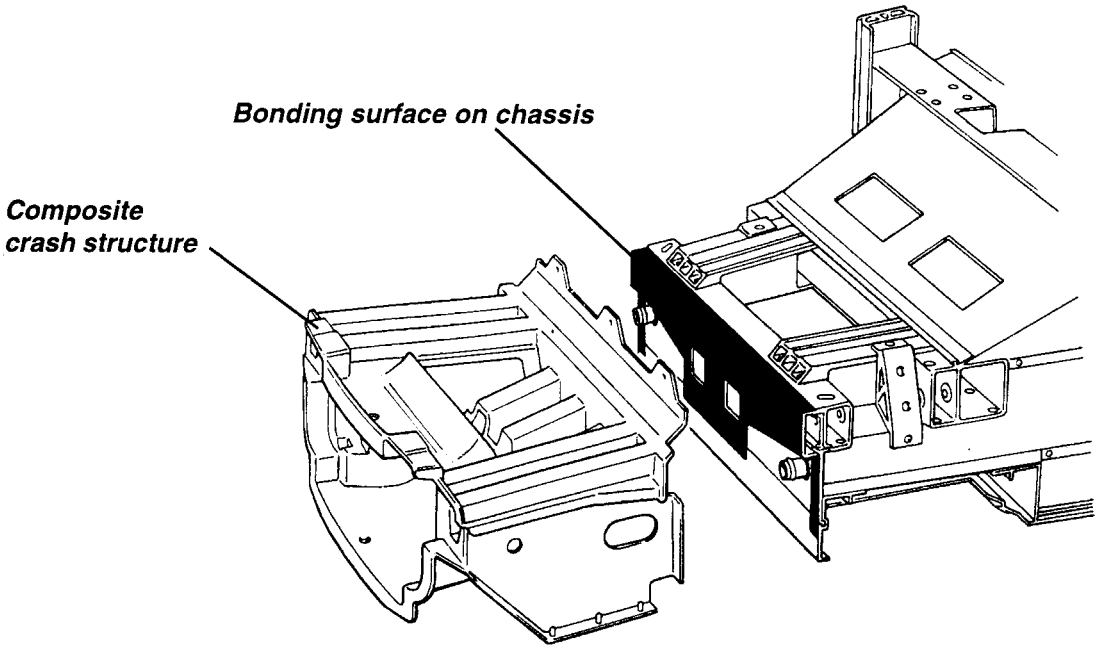

b278

Application of adhesive bead

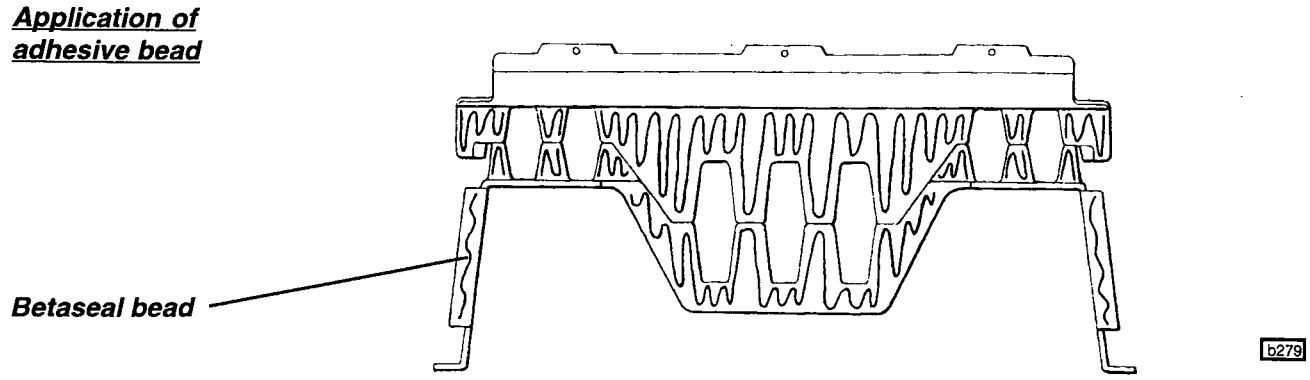

- Apply a bead of Betaseal/mate adhesive (see sub-section BM.5) to the bonding surface in the manner shown.
- Fit the structure to the chassis and press into position to spread the adhesive. Use several clamps around the joint flange to retain the structure until the adhesive has cured; This will take approximately 4 hours dependent on atmospheric conditions, with a longer period required in dry atmospheres.
- Fit the undershield, radiator (see sub-section KF.4), front clamshell (see sub-section BN.4) and remaining parts.

BM.8 - WINDSCREEN FRAME

The windscreen frame is a single VARI moulding incorporating hollow foam filled sections, and includes the fascia top and a forward extending buttress at each side to brace the frame to the front chassis. A separately moulded demist duct is bonded to the underside of the fascia top and forms an integral part of the windscreen frame. A separate dash baffle is fitted between the underside of the demist duct and the chassis, and the aluminium dashboard panel joins the rear edge of the fascia top to the chassis scuttle.

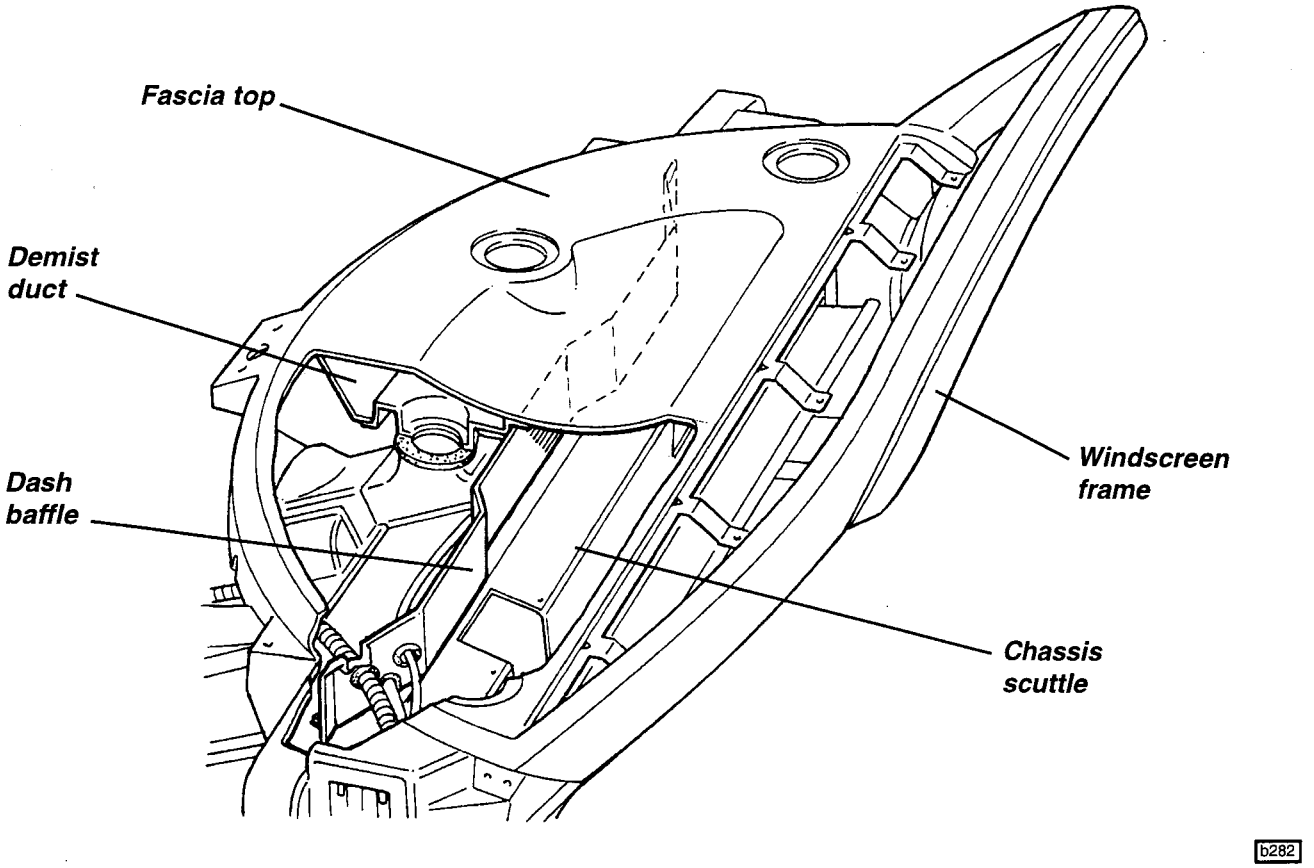

The shape of the frame is critical to the windscreen fit, and structural repairs to the frame itself are not recommended. It is not generally economic to attempt to remove the windscreen frame intact for refitment, as the elastomeric adhesive requires cutting with reciprocating knife, and access to the joints is sometimes obscured. The recommended procedure is to cut the frame as necessary to allow its removal without damage to the dash baffle panel. If the sills are to remain fitted, it will be necessary to carry out some minor work on the screen buttress to sill panel joint, where a panel overlap occurs.

To Replace Windscreen Frame

1. Remove the front wheelarch liners and front clamshell (see sub-section BN.4), and for improved access, the two doors.

2. Unbolt the topshell mounting bracket at each bottom corner of the windscreen (bracket is bolted through the 'A' post panel to a tapping plate bonded to the windscreen frame).

3. Remove the windscreen (see sub-section BN.13).

4. Remove the instrument binnacle and dash panel (see sub-section BN.12).

5. Release the brake hose/pipe connector at the front end of each buttress on the windscreen frame.

6. Disconnect the wiper motor harness and windscreen washer tubing. Release all relays, fuses and harnesses from the buttresses as necessary.

7. Use a sealant cutting tool to cut the bond between the buttresses and chassis, buttresses and sill panels and between the demist duct and dash baffle.
   Note:
   - The joint between the frame and the dash baffle panel is joggled, and in order to avoid damage to the baffle, the windscreen frame may require cutting to allow sufficient access.

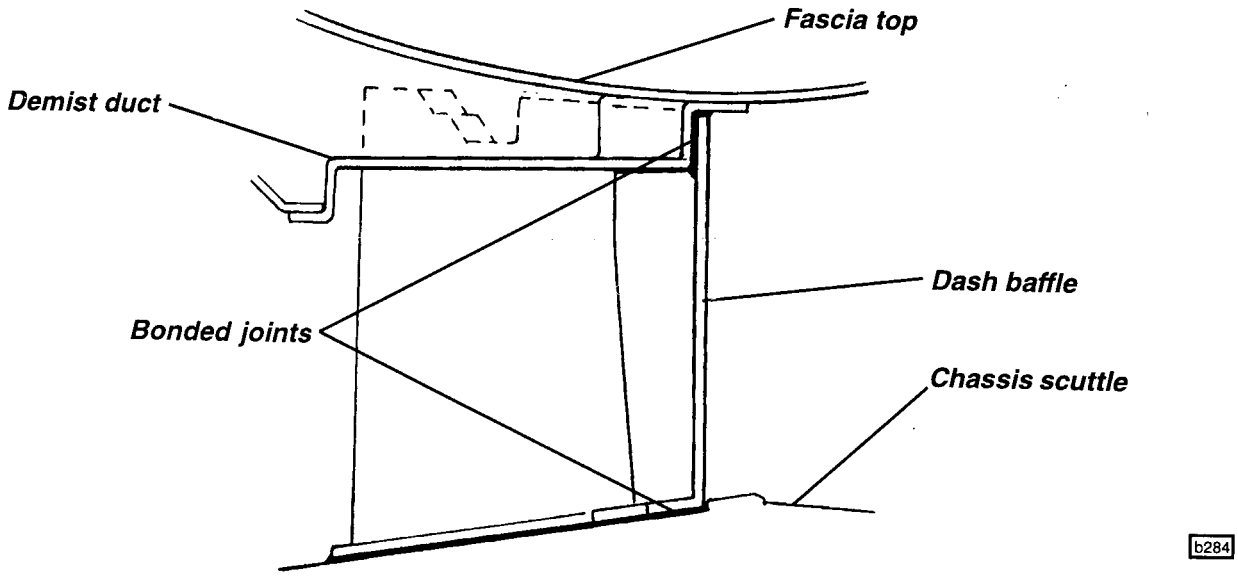

   - There is a short length of vertical joint where the buttress overlaps the sill flange where the sill flange is bonded to the chassis. It may be necessary to cut the buttress around this part of the flange in order to remove the frame, and then to remove the remaining buttress flange from the sill.
   - After releasing the entire bonded joint, some manoeuvring of the frame will be needed to withdraw the frame from the baffle panel.

8. Release the wiper motor mechanism, windscreen washer jets, gutter and demist vents for transfer to the new frame.

9. If the dash baffle panel is damaged beyond 'in situ' repair, the panel must be removed by drilling out the rivets and cutting the adhesive bead between the baffle and the chassis, and between the baffle and sill panels. The clutch pipe, main battery lead and the heater distribution cable must also be released and threaded through the panel.

10. To fit a new dash baffle:
- Dry fit the panel and check the fit at each end to the sill panels. Fettle as necessary.
- Prepare and re-activate the surface of the old adhesive on the chassis and sill panels using Betawipe 4000 (see sub-section BM.5).
- Clean and prime the bonding face on the new baffle panel using Betaclean 3900 and Betaprime 5404 (see sub-section BM.5).
- Apply a bead of Betaseal/mate adhesive (see sub-section BM.5) to the baffle flange.
- Position the panel and press along the length of the joint to ensure sufficient spread of adhesive. Retain to the chassis with two rivets and clamp as necessary until the adhesive cures.

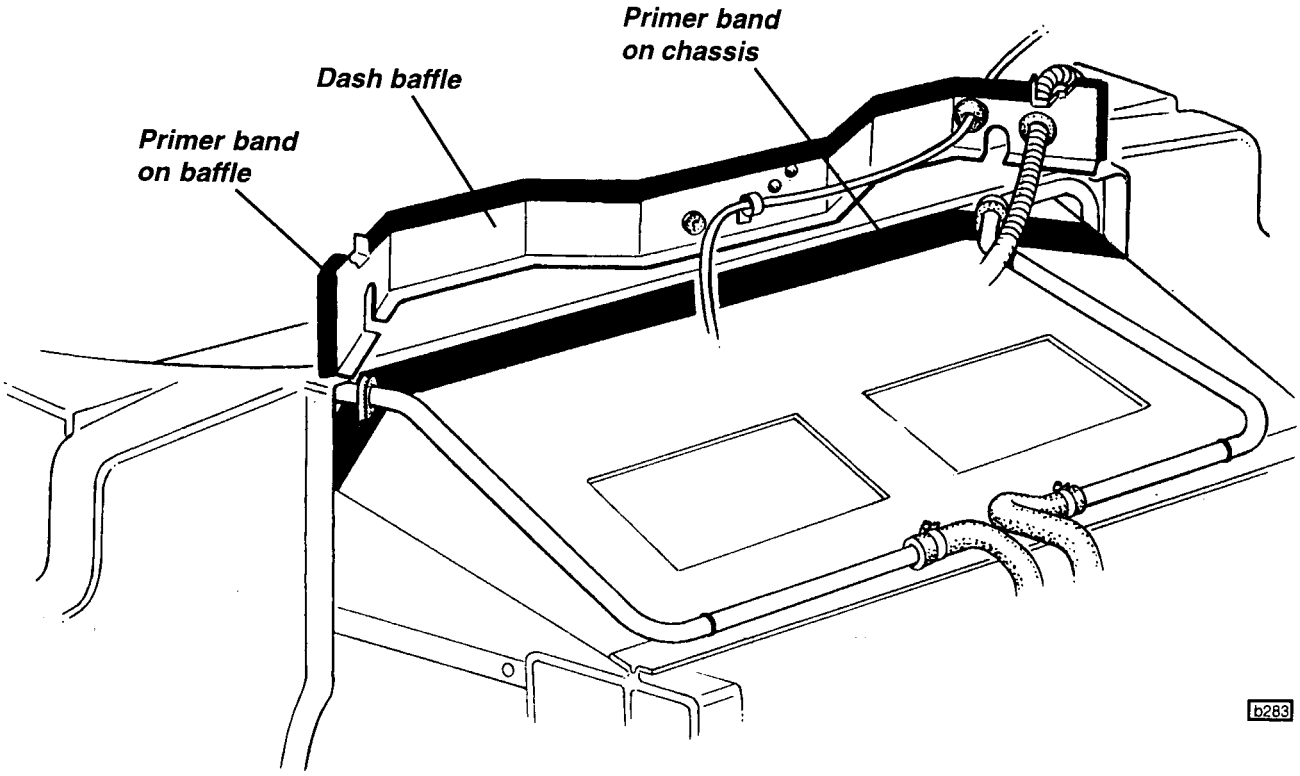

11. Prepare the old adhesive bead on the chassis for fitment of the windscreen frame by removing excess sealant from all the bonding areas on the chassis, sill panels and dash baffle to leave a consistent and level bonding surface for the new frame. It is not necessary to remove all traces of old adhesive, but a uniform surface must be available for the new adhesive bead. The remaining adhesive must be securely bonded and be cut with a scalpal blade to leave an even thickness of 1 - 2 mm.

12. Fit the wiper motor assembly, windscreen washer jets and demist vents.

13. Ensure that the cant rails are available and assembled with their catch plates and new front end foam seals. Check that the cant rail striker plates are fitted to the roll over bar.

14. - Prepare and re-activate the old adhesive bead on the chassis using Betawipe 4000 (see sub-section BM.5).
- Clean and prime the bonding area on the new windscreen frame with Betaclean 3900 and Betaprime

5404 (see sub-section BM.5).
- Apply a bead of Betaseal/mate adhesive (see sub-section BM.5) to the windscreen frame flange, and fit the frame panel into position.

15. Locate the top of the windscreen frame by fitting the cant rails into position, and secure the frame such that the cant rails are held against their striker plates on the roll over bar, but with out the foam seals on their front end being compressed. After further assembly, the thickness of the header rail moulded carrier strip and tongue strip (see sub-section BN.14) provide the appropriate seal compression to locate the cant rails.

Windscreen frame bonding (sills not shown)

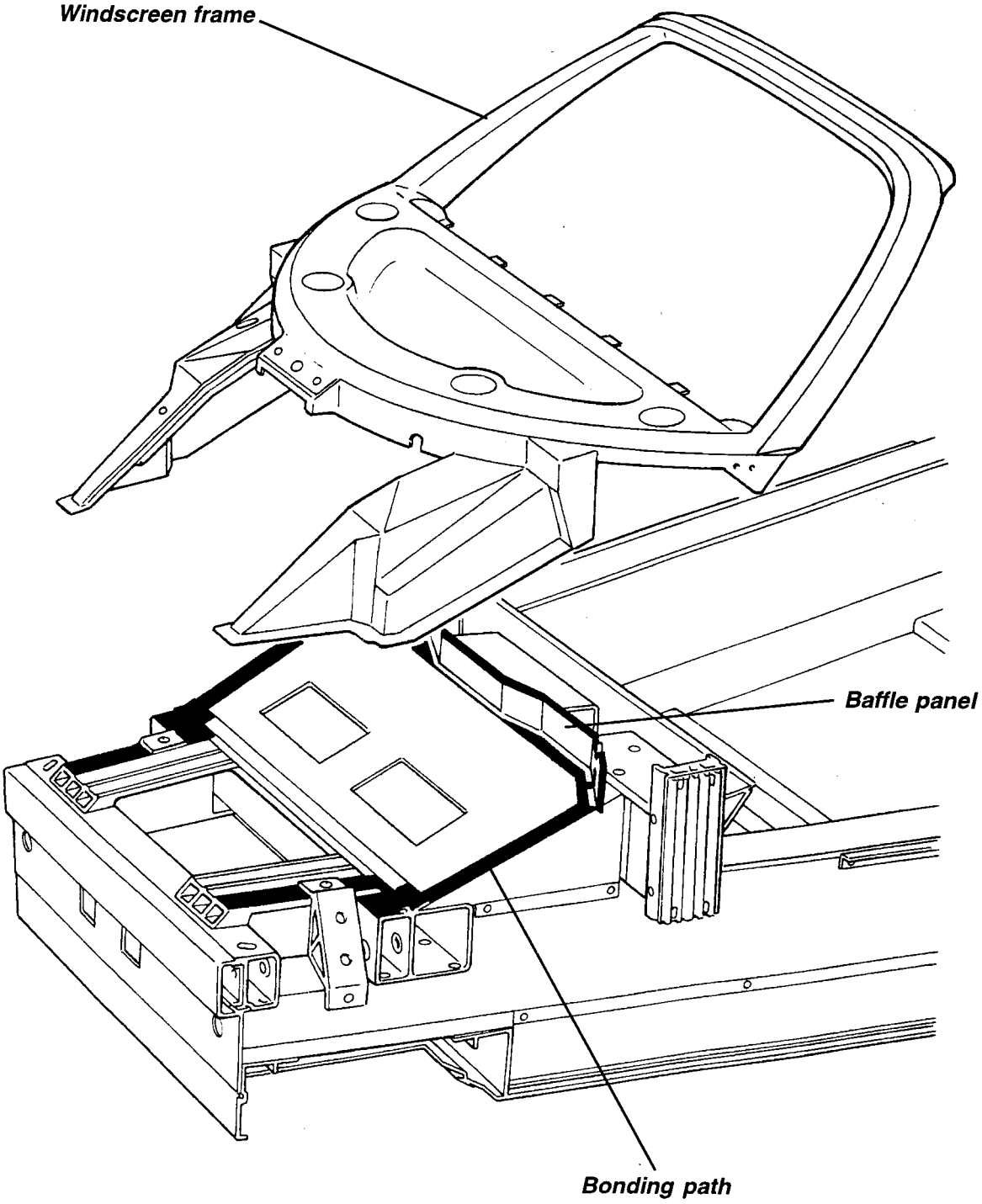

16. Press over each part of the windscreen frame panel joint to ensure sufficient spread of the adhesive, and use clamps as necessary to retain the frame whilst the adhesive cures. If necessary use a spatula to smooth out or remove any excess or extruded adhesive.

17. Seal the frame panel to the top of the door hinge post at each side by extruding a bead of Betaseal, and smoothing with a spatula to obtain a neat finish.

18. Examine the whole of the bonding jointline for sealing integrity, and if necessary apply additional adhesive to seal any gaps. Use a spatula to smooth any visual areas to a neat finish.

19. Do not disturb the frame until the adhesive has fully cured (see sub-section BN.5).

20. Fit the windscreen (see sub-section BN.13), instrument binnacle and dash (BN.12), front clamshell (BN.4), doors (BN.7) and other components as necessary.

BM.9 - SILL PANELS

The sill panels incorporate the 'A' and 'B' posts, and are bonded to the chassis, windscreen frame, dash baffle, rear bulkhead panel and capping rail. The top and bottom flanges of the sill centre section are bonded into grooves in the chassis sills, and it is necessary to cut the sills in the course of their removal: It is not practical to attempt to remove a sill panel intact for later refitment. If sill damage occurs which is not repairable 'in situ', the sill panel should be renewed.

To Replace Sill Panel

A short section of sill flange underlaps the windscreen frame buttress flange in the front wheelarch area and requires that some cutting and laminating of the new panel is required on assembly.

1. Remove front and rear clamshells (see sub-sections BN.4, BN.5) and dash panel (BN.12). Remove the clamshell mounting bracket at the bottom corner of the windscreen.

2. Remove the cant rail striker from the top of the sill 'B' post to the roll over bar, and the door latch striker pin.

3. Remove the speaker panel from the cabin rear corner, and remove the engine lid release cable from the sill panel.

4. Use a sealant cutting knife to cut the adhesive bead between sill and chassis/body panels.
   Note:
   - In the front wheelarch area, a short section of the sill flange underlaps the windscreen frame buttress flange. Unless the windscreen is also to be removed, it will be necessary to cut the sill around this flange in order to release the sill.
   - The rear bulkhead panel may need to be released from the chassis sufficiently to allow cutting of the sealant between sill and bulkhead panel. Alternatively the sill can be cut as necessary to allow its removal, and then the remaining sill flange removed with the improved access.
   - The top and bottom edges of the sill centre section fit into grooves in the chassis side frames, and may not readily be cut out with the sill intact. Cut the sill as necessary to release the panel, and then remove the remaining edges of the panel from the chassis using a suitable cutting knife.
   - Cut the sealant around the door hinge post aperture, and the striker plate.

5. Remove excess sealant from all the bonding areas on the chassis and body panels. It is not necessary to remove all traces of old adhesive, but any remaining adhesive must be securely bonded and be cut with a scalpal blade to leave an even thickness of 1 - 2 mm.

6. Cut the flange from the sill to match the windscreen frame buttress cut out made during removal. Dry fit the sill and fettle as necessary to achieve a good fit.

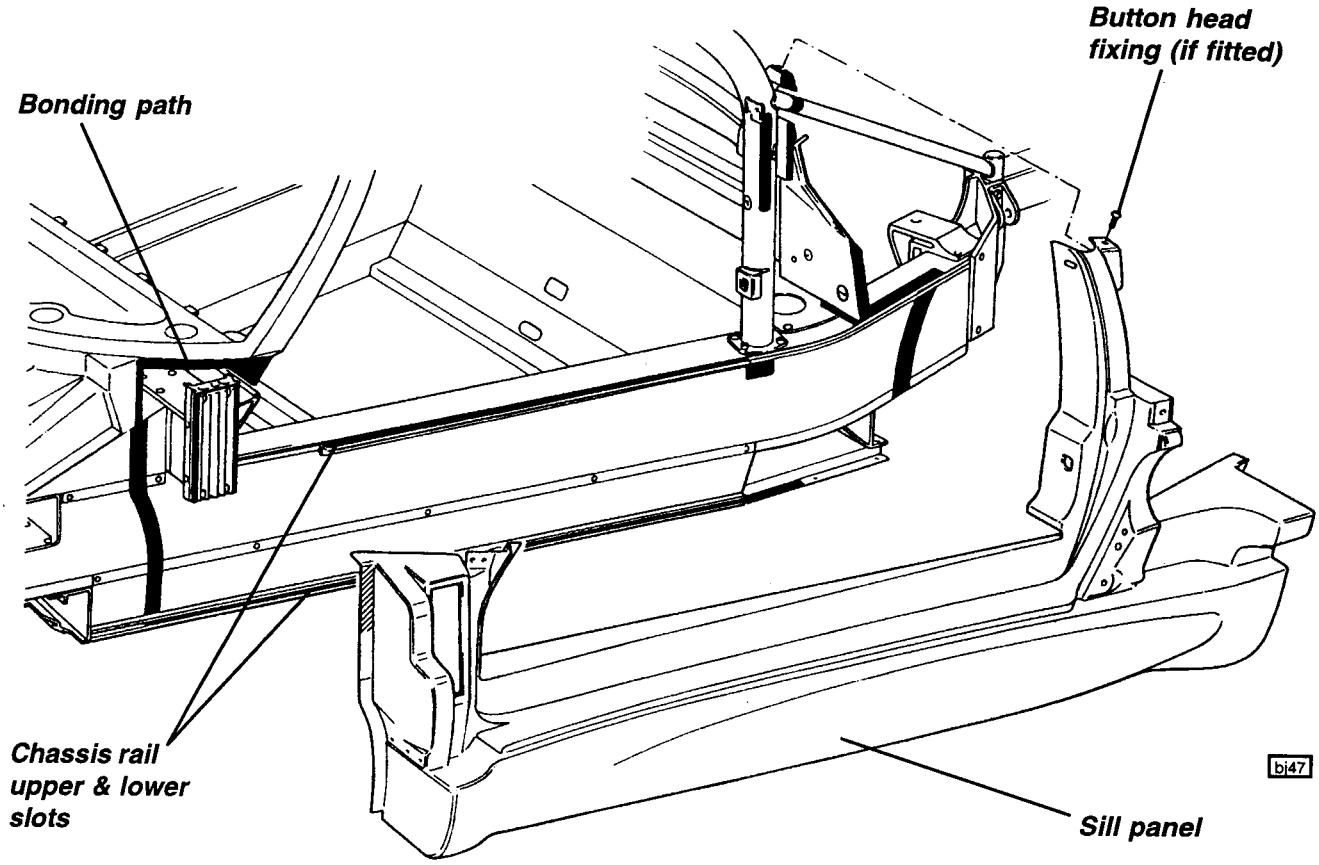

7. Before preparing the surfaces for bonding, ensure that the necessary pipes and cables are fitted to the chassis side rails:
   RH side: - heater feed pipe
   - a.c. feed and return pipes (if fitted)
   LH side: - heater return pipe
   - clutch pipe
   - main battery positive cable

8. Prepare the bonding surface of the new sill panel with Betaclean 3900 and Betaprime 5404 (see sub-section BM.5). Prepare surface of the old adhesive bead on the chassis and body panels using Betawipe 4000 (see sub-section BM.5).

9. Apply a bead of Betaseal/mate adhesive (see sub-section BM.5) to the bonding surface on the chassis and body and fit the sill panel into position, first locating the sill bottom edge into its chassis slot, and press all around the joint to ensure sufficient spread of adhesive. If necessary, use a spatula to smooth or remove any extruded adhesive, and to neaten any visual areas. If necessary, add adhesive to the gaps around the door hinge post and striker plate, and smooth with a spatula.

10. Clamp the panel into position until the adhesive has cured (see sub-section BM.5).

11. Roughen the surface of the windscreen buttress flange and the adjacent sill panel in the modified area, and lay up two pieces of chopped strand mat across the joint.

12. Refit the dash panel, front and rear clamshells, doors, both wheelarch liners and other components as necessary.

BM.10 - REAR BULKHEAD & CAPPING RAIL

The rear bulkhead and capping rail are bonded to the top surface of the rear chassis, and to the rear ends of each sill panel. Removal or replacement of these panels requires that at least one of the sills be removed. When fitting, the angular position (near vertical) of the panels is best achieved if fitted immediately before the sill panel(s), in order that the sill to bulkhead joint be allowed to define the alignment.

1. With at least one of the sill panels removed, the adhesive bead must be cut to free the panels from the roll over bar stays, sill panel rear ends and chassis.

2. Prepare the joint faces of the new panels, chassis and sills in accordance with sub-section BM.5.

3. Locate the capping rail around the roll over bar stays before applying a bead of Betaseal/mate to the top and bottom joint flanges of the bulkhead, and also to the sill flange if one sill is already fitted. Fit the bulkhead into position, with the vertical flange on the bottom of the panel against the rear face of the chassis fuel tank bay. Fit the capping rail to the top flange of the bulkhead.

4. Fit the sill panel(s) as detailed in sub-section BM.9, and fit the button head screw to secure the top of each sill 'B' post to the capping rail. Clamp the sill(s) and bulkead/capping rail into position until the adhesive has cured. There should be a gap of approx. 3 mm between the top ends of the capping rail and the roll over bar. Apply additional Betaseal to fill the gap between capping rail and the roll over bar stays, and smooth with a spatula for a neat finish.

BODY FITTINGS

SECTION BN - M111 ELISE

	Sub-Section	Page
Soft Top Roof	BN.1	2
Front Bonnet	BN.2	4
Engine Cover Lid	BN.3	5
Front Clamshell	BN.4	7
Rear Clamshell	BN.5	8
Door Mirrors	BN.6	10
Door Beam & Hinge	BN.7	12
Door Shell Assembly	BN.8	13
Door Glass, Guide Channels & Winder Mechanism	BN.9	14
Door Seals	BN.10	17
Door Latch Mechanism	BN.11	20
Instrument Binnacle & Dash Panel	BN.12	22
Windscreen	BN.13	25
Roof Header Retaining Strip	BN.14	28
Decal Positioning	BN.15	29
Rear Boot Bulkhead	BN.16	30

BN.1 - SOFT TOP ROOF

Concept

The Lotus Elise has been designed to exploit the pleasures of open top motoring, the better to enjoy exposure to the natural environment, unencumbered by the restrictions and confinement bestowed by a cockpit roof. In order to provide some weather protection to the occupants and vehicle interior, and allow the continued enjoyment of the car in unfavourable weather conditions, a simple soft top roof may be erected in conjunction with a rigid rear window and roll bar fairing.

Rear Window & Roll Bar Fairing

To allow the soft top roof to be carried on board and erected at will, the roll bar fairing should be fitted, together with the glass rear window. Running in this configuration may also reduce cockpit air turbulence, and restrict the backflow of hot air from the engine bay outlet vents. Using the soft top roof without the fairing and rear window is not recommended.

Fit the rear window into the moulded channel in the body, with the rubber seal on the forward side of the glass. Place the fairing onto the roll over bar, and press the glass top edge against the flange on the fairing to compress the seal and allow the window to be retained by the two tangs. Hook the single over-centre latch at each end of the fairing with its notch on the body, and close the latch.

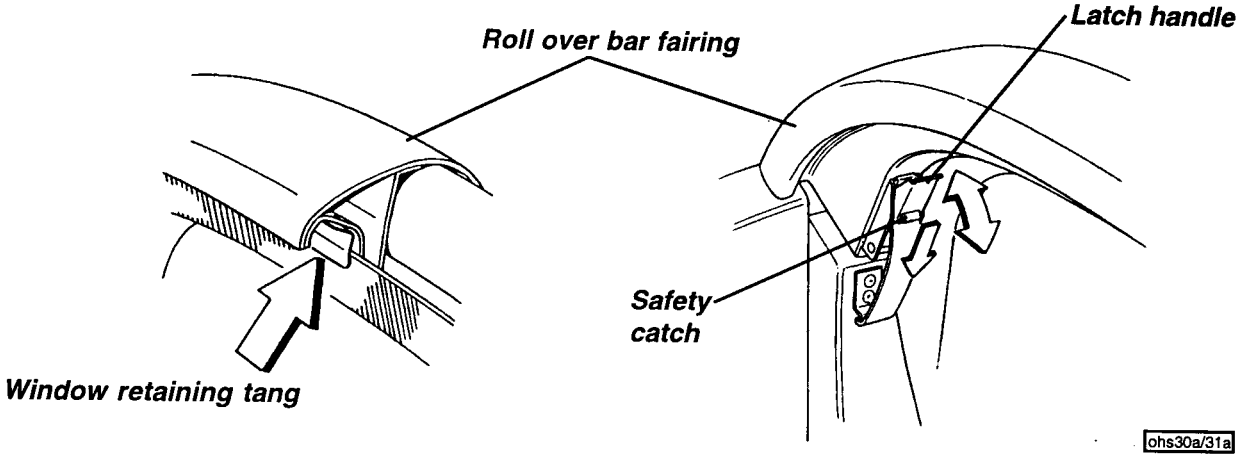

To remove the window and fairing, press down the safety catch before disengaging each over-centre latch and lifting off the fairing. Lift out the rear window from its channel, and store carefully.

Soft Top Roof - Erection

To erect the soft top roof, first fit the rear window and roll bar fairing (see above). Retrieve the folded roof assembly from the luggage compartment or from behind the seats, unpack from its stowage bag (if applicable), and open both doors. Then:

1. Unroll the roof, and identify the two side rails. Plug the spigot on the front end of the right hand rail into the socket at the top of the windscreen pillar. Clip the rear end of the rail into its retainer on the roll bar, by pushing the rail forwards at the same time as pressing inwards on the rear end. Fit the left hand rail in a similar manner.

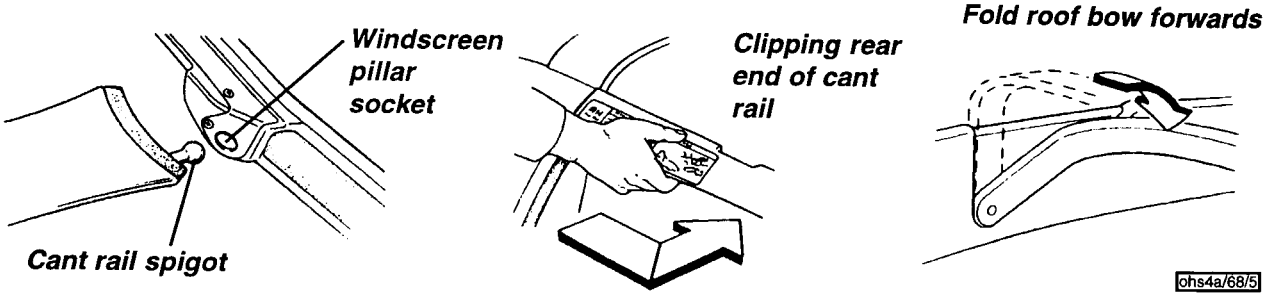

2. Unclip the two roof bows from their stowage site behind the seats, and fit into their locating holes in the roof side rails. Note that both bows are identical. Fold both bows forwards.

3. Lay the soft top in position, and hook the whole length of the lip on the front edge of the roof beneath the retaining strip on the windscreen header rail. Centralise the roof by wrapping the sides of the soft top around the side rails, and clipping the three press stud fasteners on the inside face of the rails.

Locating roof front lip

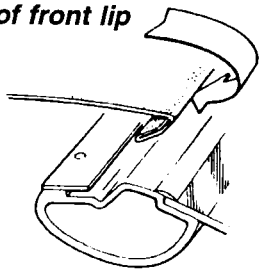

Clipping roof to side rails

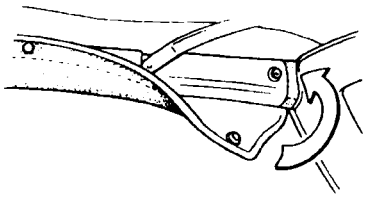

ohs2/3

Ensure that the cant rail front foam seal is not caught beneath the roof material and is left exposed to form a weather seal with the door glass.

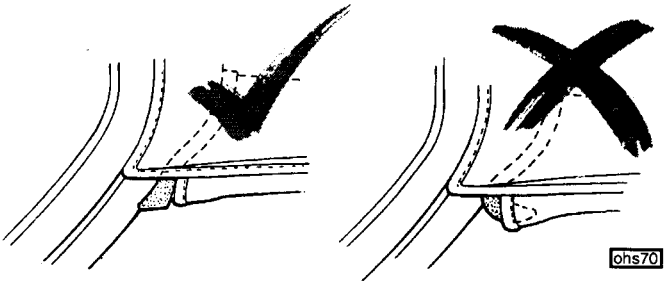

ohs70

4. Unfold the two roof tails, and engage the pin in each tail with its keyhole slot in the body buttress. Ensure that the pin is fully engaged before using the hexagonal key provided (stowed in the corner panel behind the left hand seat) to turn each cam pin to tension the roof:

Right hand pin - clockwise.
Left hand pin - counterclockwise.

Tensioning roof

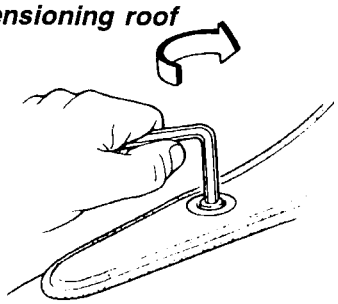

Roof bows erected

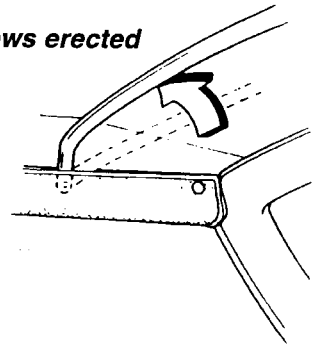

ohs6/7

5. Push the two roof bows rearwards to their upright position to fully tension the roof.

Soft Top Roof - Removal & Stowage

1. Push both roof bows forwards to relieve the tension on the fabric.

2. Use the hexagonal key stowed in the corner panel behind the left hand seat, to release the tensioning pins in the roof tails:
- Turn the right hand pin counterclockwise;
- Turn the left hand pin clockwise.

3. Pull each tail backwards to disengage the pin from its keyhole slot, fold the tail over, and tuck the end beneath the elastic strap to protect the paintwork and glass from being damaged by the pin mechanism.

Tucking in roof tail

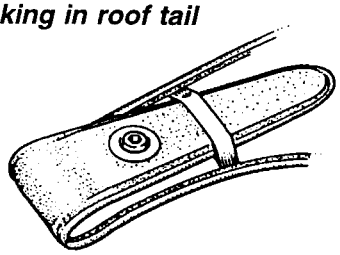

ohs57

4. Unclip the three press studs securing the roof to each siderail, and pull the front edge of the roof forwards to release from the header rail retaining strip. Lift off the roof fabric, lay upside down, and fold over each side towards the centre.

Folding roof fabric

ohs58

5. Release the two roof bows from the side rails, and stow in their locations behind the seats.

6. Remove each siderail by pushing forwards whilst pulling the rear end outwards to release from the rear end retaining clip. Withdraw the rail front end spigot from the windscreen pillar.

Stowage of roof bows

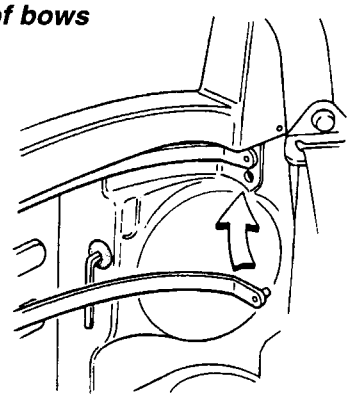

Removal of side rail

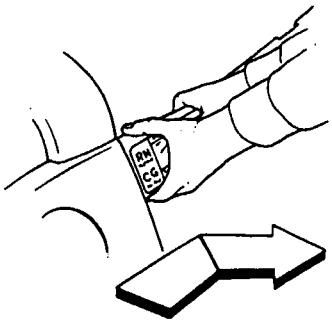

ohs48

7. Lay the two siderails on the roof fabric, and roll up the roof with the siderails inside. Place the roof in the storage bag (if available), and stow either behind the seats, or in the rear luggage compartment.

Important Note: If the roof is not fully dry, it should be stowed for no longer than a few days before unrolling or refitting and allowing to air dry completely. Prolonged stowage of a wet or damp roof will promote rotting of the fabric. The roof may be treated periodically with 'Fabsil' silicone waterproofer (A111B6061), especially on the cant rail flaps and seams, in accordance with the manufacturer's directions.

BN.2 - FRONT BONNET

The front bonnet is a composite moulding, which incorporates outlet ducts for the engine cooling radiator with a reinforcing rib bonded to the underside of the panel. The bonnet uses a single hinge at the front edge, and a cable release latch at the rear end, with the release handle located in the top of the driver's footwell. Note that the handle is pulled ***downwards*** to release the bonnet.

The air outlet grilles are bonded to the underside of the panel with Betamate adhesive, and a plastic finisher strip used to tidy the joint.

Bonnet release handle

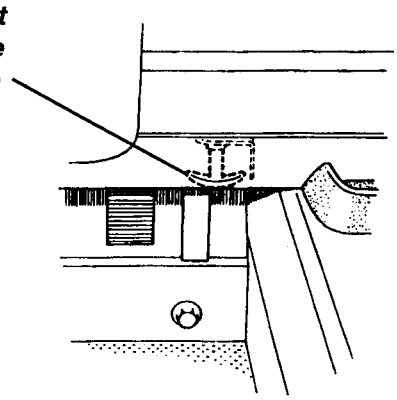

ohs24

Latch Mechanism

The single latch is mounted at the centre of the rear edge of the bonnet, and consists of a striker pin

clamped to the bonnet reinforcing rib with a tapping plate and locknut, and a latch slider plate mounted on an extension to the wiper motor bracket, itself fixed to the scuttle. A bowden cable connects to the slider plate by a clamp screw, and terminates in a vertically mounted release handle in the top of the driver's footwell. In the event of cable breakage, access to the latch is available after removing the driver's side front wheelarch liner.

Adjustments

The height of the rear edge of the bonnet is controlled by the setting of the striker pin, which may be screwed up or down as required, and by a rubber buffer at each rear corner of the panel aperture. The buffers are mounted on the heads of fixing bolts which secure the front topshell to the windscreen buttresses. The height of the front edge is controlled by the number of shim plates fitted between the hinge and the bonnet and the slotted holes in the hinge arm allow for positional adjustment of the panel.

If removing the bonnet, take note of the shim stack for re-assembly, and when the bonnet is removed, guard against damage being caused to the radiator matrix by the hinge elbow if the hinge blade should be inadvertently pressed downwards.

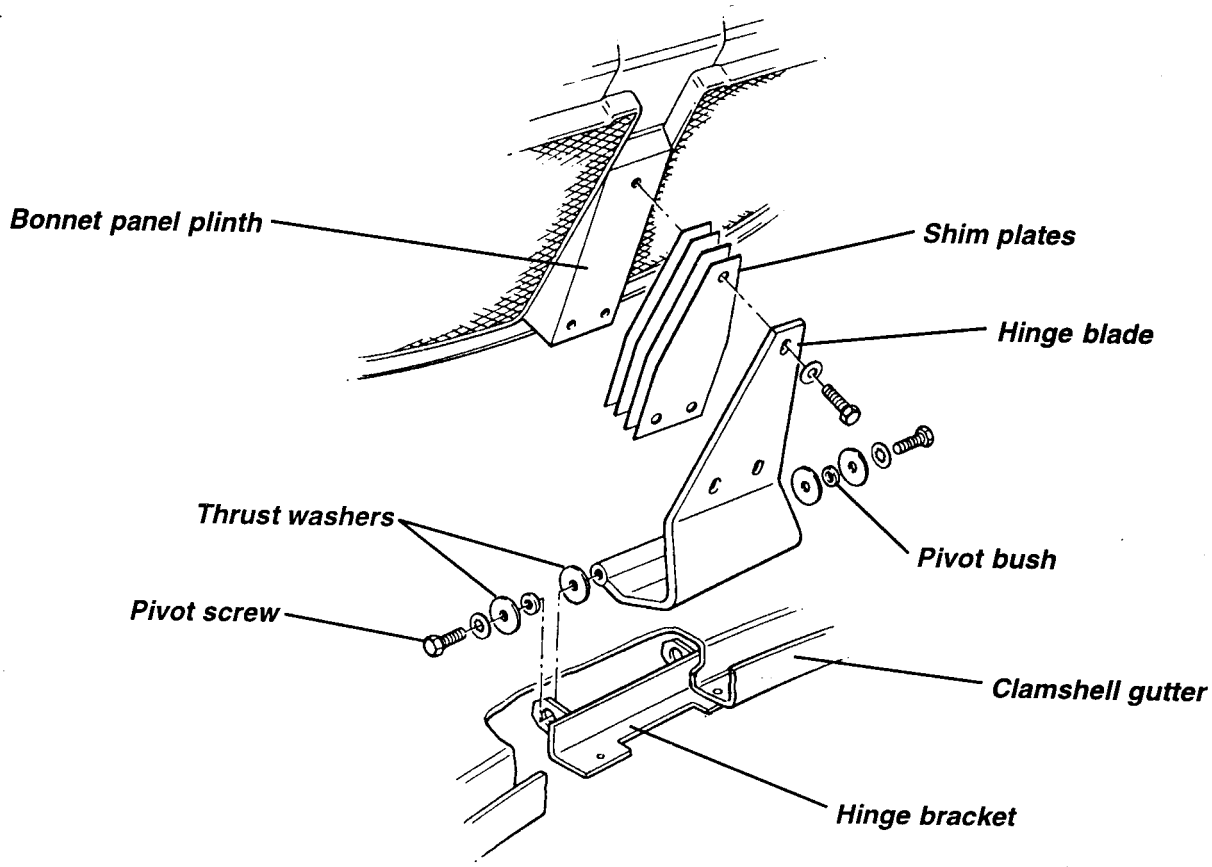

b234

Bonnet Hinge

A hinge bracket is bonded and rivetted to the front gutter of the clamshell, and incorporates two pivot lugs. The alloy hinge blade is bolted to the bonnet via three M6 screws, with tapped bobbins laminated into a plinth on the underside of the bonnet panel. A tube welded to the front end of the hinge blade is tapped to take the two M6 pivot screws, which use plastic pivot bushes and steel thrust washers to connect the blade to the hinge bracket lugs. Disassembly of the hinge is possible with the clamshell 'in situ', but removal of the clamshell provides easier access.

BN.3 - ENGINE COVER LID

The engine cover lid is an aluminium pressing which incorporates hot air outlet grilles for the engine bay, bonded to the lid with Betamate adhesive, and the mounting for the radio aerial. A composite box section

reinforcement channel is bonded to the front underside of the panel, and incorporates three M6 tapped bobbins for the hinge blade attachment, and a composite plinth is provided at the rear for the latch striker pin.

Latch Mechanism

The single latch is mounted at the centre of the rear edge of the lid, and consists of a striker pin clamped to the lid plinth with a tapping plate and locknut, and a latch slider plate mounted on a composite carrier bonded to the rear clamshell. A bowden cable connects to the slider plate by a clamp screw, and terminates in a release handle mounted in the rear shut face of the driver's door aperture. In the event of cable breakage, access to the latch is available after removing the driver's side rear wheelarch liner.

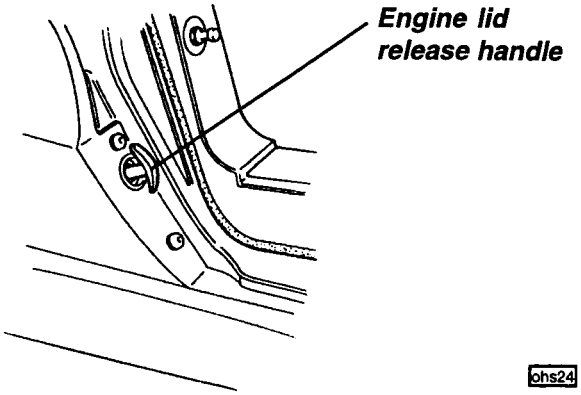

Adjustments

The height of the rear edge of the panel is controlled by the setting of the striker pin, which may be screwed up or down as required. The height of the front edge is controlled by the number of shim plates fitted between the hinge blade and the panel, with slotted holes in the blade allowing for positional adjustment of the panel.

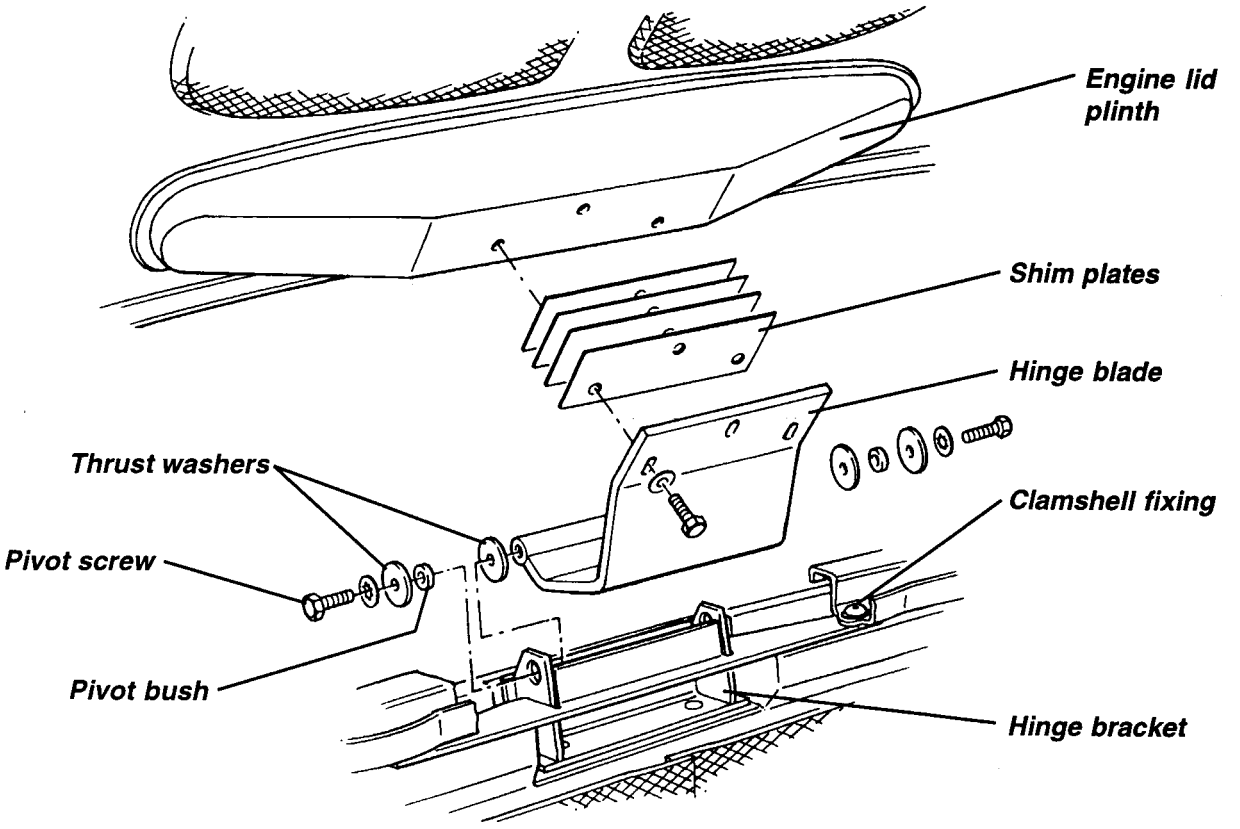

Engine Lid Hinge

A hinge bracket with two pivot lugs is bonded and rivetted to the rear side of the cabin rear bulkhead, with an integral reinforcement bracket picking up on two adjacent clamshell fixings. The alloy hinge blade is bolted to the lid via three M6 screws, with tapped bobbins laminated into a plinth on the underside of the engine lid panel. A tube welded to the front end of the hinge blade is tapped to take the two M6 pivot screws, which use plastic pivot bushes and steel thrust washers to connect the blade to the hinge bracket lugs. For access to the hinge pivot screws, it is necessary to remove the rear clamshell.

BN.4 - FRONT CLAMSHELL

The front clamshell is a one piece composite body moulding incorporating both front wings, the front bonnet aperture, radiator air intake and headlamp housings. The clamshell is secured to the chassis and other body panels via threaded fasteners for ease of removal and to facilitate service access and body repair.

To Remove Front Clamshell

1. Remove both front roadwheels.

2. Remove the front wheelarch liners:
   - From within the front services compartment, release the fusebox from the passenger side wheelarch liner (3 fixings).
   - Remove the three screws at the lower rear edge, and the two screws at the lower front edge of each liner. Withdraw both wheelarch liners.

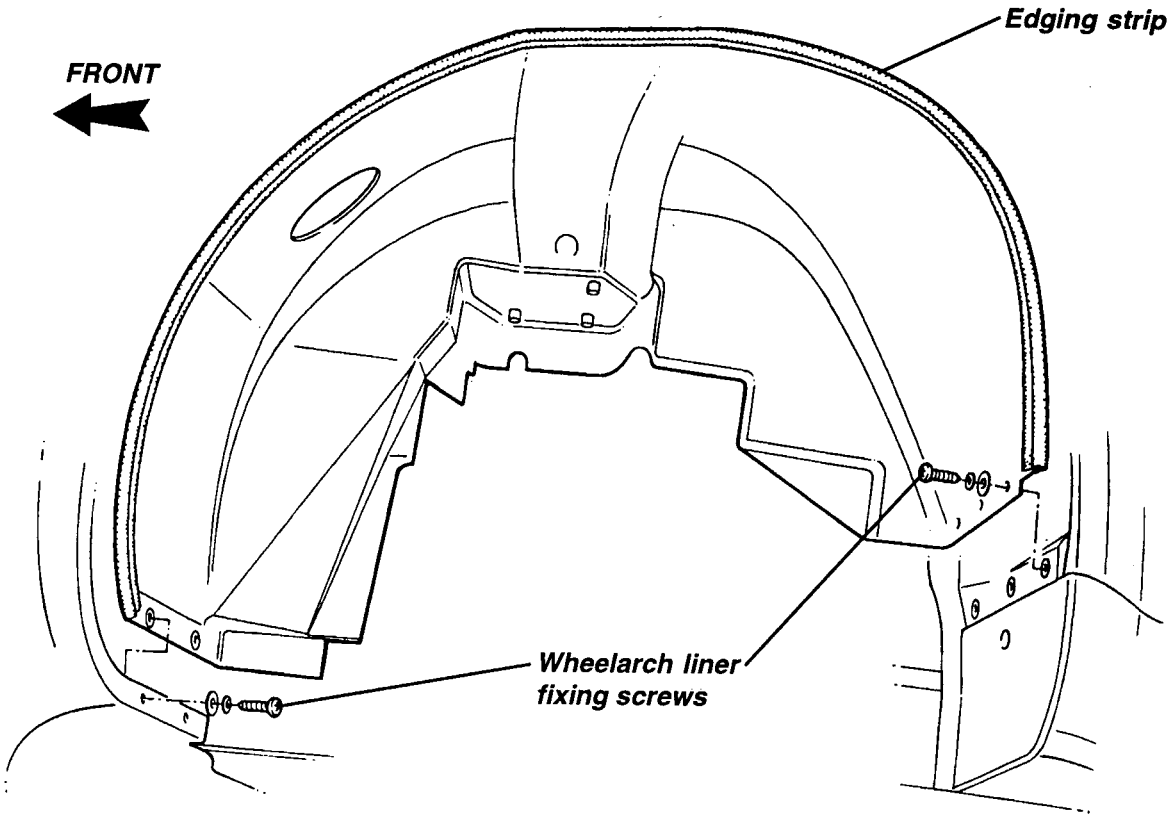

b236

3. Remove the two M8 fixings securing the lower rear edge of the clamshell to the top of the sill.

4. Remove the single M8 screw securing each top rear corner of the clamshell to a bracket at the top of the 'A' post.

5. Remove the four fixings in the bonnet gutter, one at each rear end, and one in each front corner. The rear pair are also used as adjustable mounts for the bonnet closing buffers, and use M8 captive fixings in the screen frame buttresses. The front pair use M8 captive fixings in the radiator mounting panel. Take note of the shim stacks fitted at each of the fixing points.

6. Remove the five screws securing the front lower edge of the clamshell to the front alloy undershield.

7. Disconnect the clamshell wiring harness at the driver's side of the front compartment, and lift the clamshell from the car. Note any spacing washers or shims fitted at any fixing point.

Front Clamshell Fixings

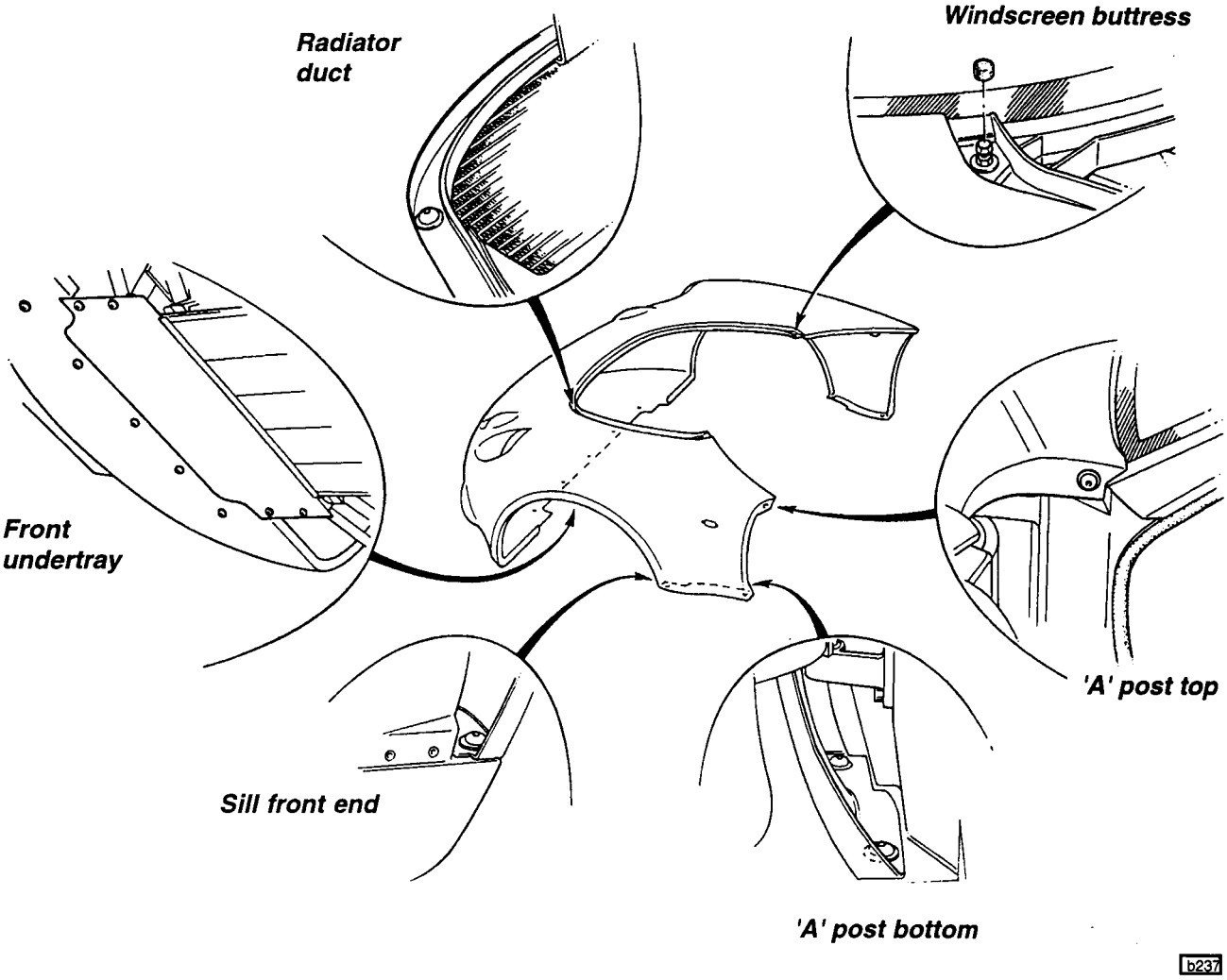

8. Refit the clamshell in reverse order to removal, taking care to retain any spacer washers in their original positions.

BN.5 - REAR CLAMSHELL

The rear clamshell is a one piece composite moulding incorporating both rear wings, the engine bay aperture and rear lamp assemblies. A flat alloy 'shear plate' is bonded into each side of the moulding in order to stiffen the panel, and provide a mounting point to the chassis. The clamshell is secured to the chassis and other body panels by threaded fasteners for ease of service access and body repair.

To Remove Rear Clamshell

1. If fitted, remove the roll bar fairing and rear window.

2. Remove both rear roadwheels.

3. Remove the fixings securing both rear wheelarch liners:
   - Two fixings at the front edge of the liner into the sill.
   - Two fixings at the rear edge of the liner into the clamshell.
   - One fixing at the rear inboard edge of the liner into the shear plate.
   - One fixing near the damper top into the longeron.

   Withdraw both wheelarch liners.

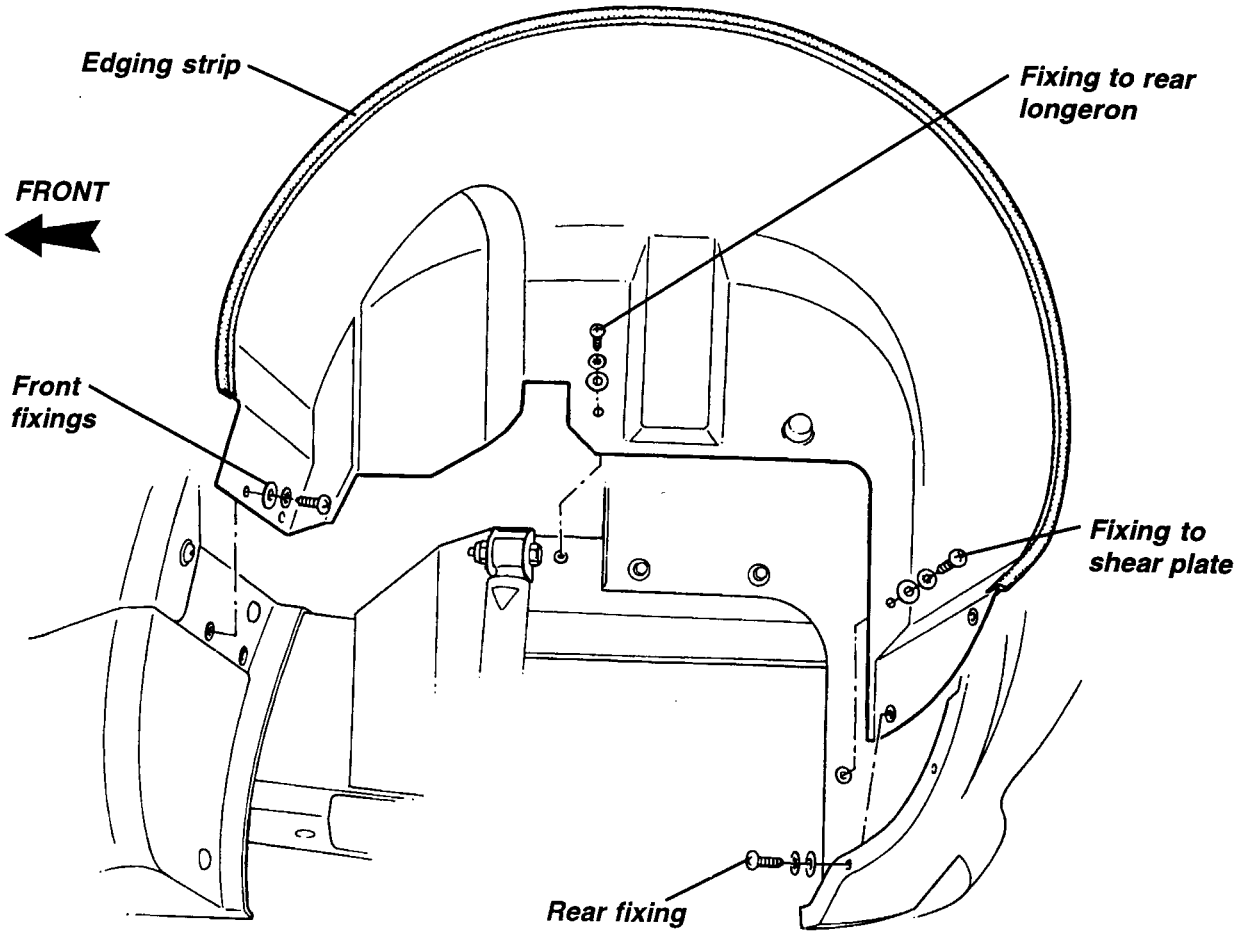

b238

4. Disconnect the bowden cable from the engine lid latch plate, and release unclip from its retaining clips.

5. From inside each wheelarch, remove the three fixings securing the shear plate to the longeron.

6. Remove the screw securing the front bottom corner of each wheelarch to the sill.

7. If an engine bay undertray/diffuser is fitted, release the five fixings securing the bottom rear edge of the clamshell to the undertray.

8. Disconnect the rear harness at the LH rear of the luggage compartment, and the harness connectors to the rear fog and reverse lamps.

9. Remove the rear number plate, and release the single fixing securing the clamshell to the rear tray bracket.

10. Remove the fuel filler cap and release the four screws securing the fuel filler neck to the clamshell. Remove the washer ring, and withdraw the neck from the clamshell aperture.

11. From inside the cockpit, remove each rear corner (speaker) trim panel:
    - Release the seat belt reel.
    - Remove the screw at the outboard top corner of the panel.
    - Remove the screw at the inboard edge (also anchors the luggage net).
    - Pull the panel away from its Velcro fastening.

    From the access thus provided, release the clamshell front fixing from the inside of the 'B' post area.

12. Remove the two screws securing the lower front edge of the clamshell 'B' post.

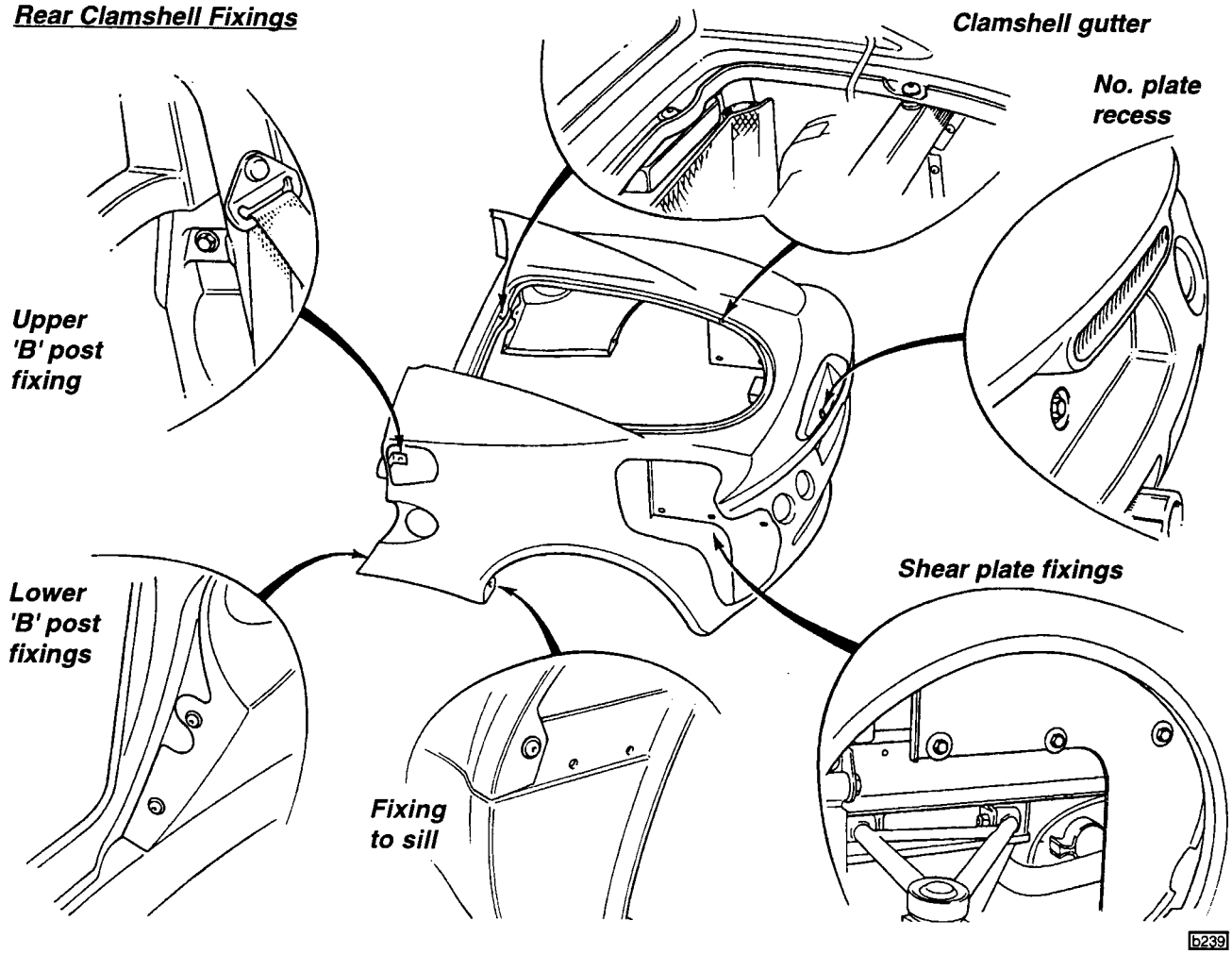

13. Release the two fixings securing the front of the clamshell lid gutter to the rear bulkhead panel, and the single screw each side fixing the gutter to the boot bulkhead (if fitted).

14. Withdraw the clamshell from the car.

15. Refit the clamshell in the reverse order to disassembly.

BN.6 - DOOR MIRRORS

The manually adjustable, plastic housed door mirrors, are mounted via an injection moulded plinth to the door shell. A spring loaded ball and socket arrangement provides a means of mirror adjustment, and a sprung attachment of the mirror housing to the pivot socket allows for the mirror to move forwards or backwards on accidental contact, in order to reduce the potential for personal injury or vehicle damage.

Replacement of mirror glass

The mirror glass is contained in a plastic surround which is clipped into the housing in order to provide for convenient and inexpensive replacement.

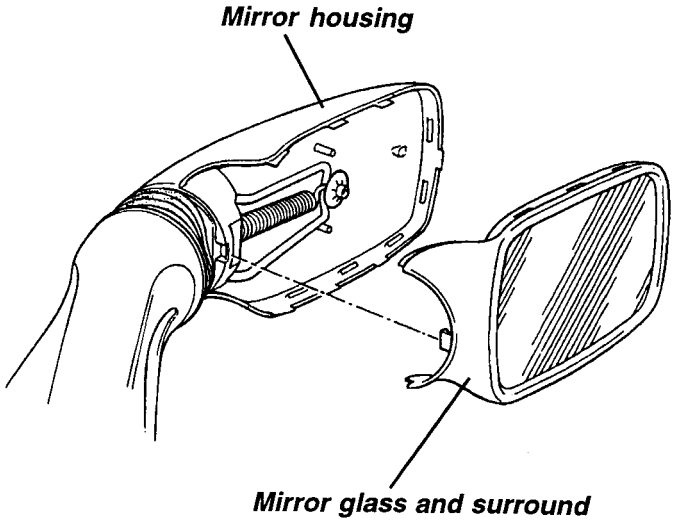

To remove a glass, pull back the boot between mirror and plinth, and carefully prise the inboard edge of the mirror surround from its retaining clips. Working around the mirror periphery, continue to prise the surround from the housing taking care not to damage the paint on the housing. Press the new glass/surround into the housing until all the retaining clips are engaged, and reposition the convoluted boot.

Replacement of mirror assembly

The mirror assembly locates in the plastic injection moulded plinth via two spigots, and is retained by a single screw tapping into the lower spigot. To remove a mirror assembly, use a cross head cranked screwdriver, or similar tool, to remove the screw recessed into the inside face of the mirror plinth.

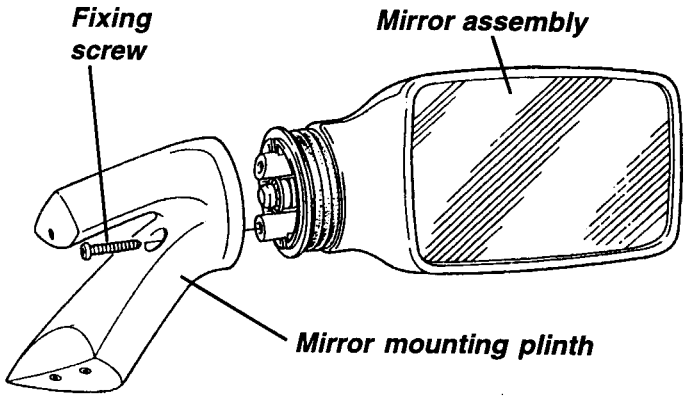

b241

Replacement of mirror plinth

The mirror plinth incorporates tapping plates to accommodate a single screw into the top leg, and a pair of M5 screws into the bottom leg. Access to the recessed socket head upper screw is readily available, but access to the lower hex. head screws is difficult with a fully assembled door. It is possible to access the screws, using a suitable flexi-drive, via the interior door handle aperture if the handle is removed, but for easier access it is necessary to remove the door assembly from the beam (see sub-section BN.8).

When refitting, ensure that foam gaskets are used between each leg of the plinth and the door shell.

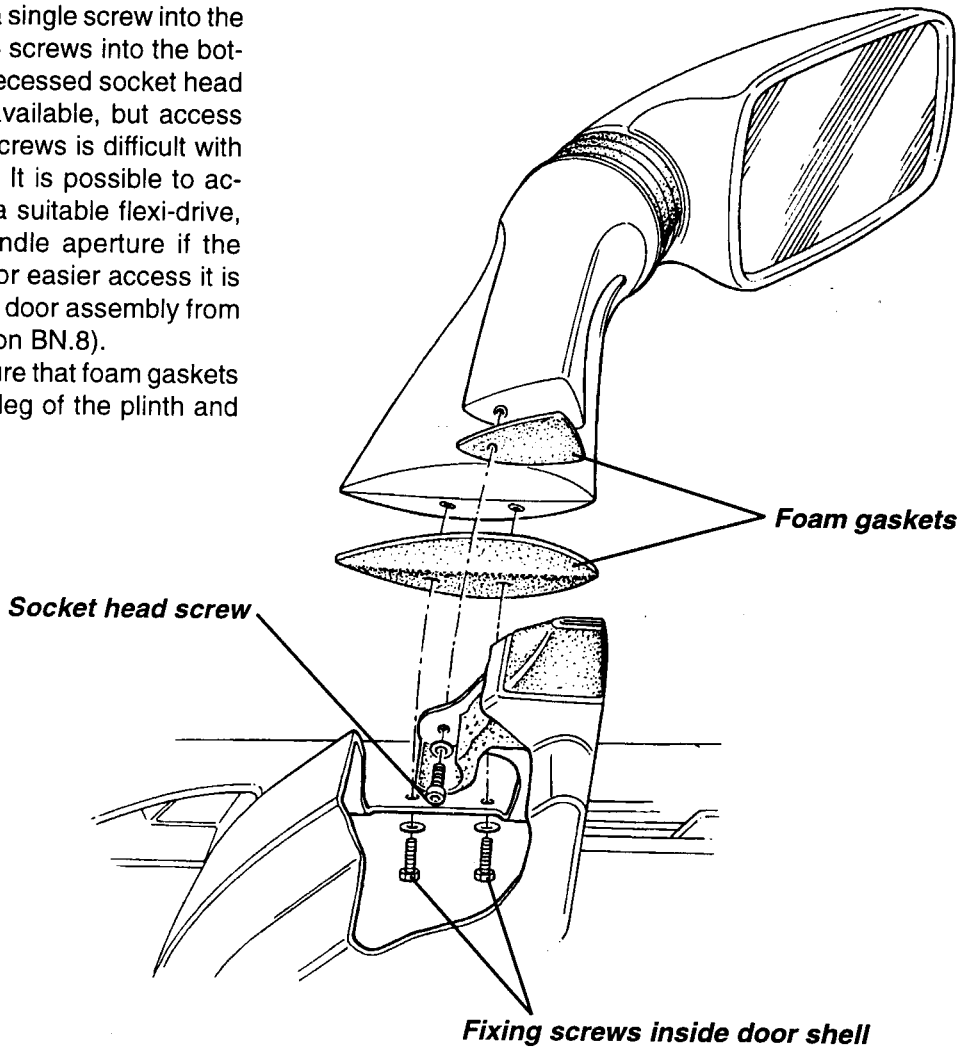

b242

BN.7 - DOOR BEAM & HINGE

The door shell is bolted to a hollow section extruded aluminium alloy door beam, hinged at the front end to the 'B' post, and carrying the door latch mechanism, via a bracket, at its rear end. The front end of the door beam is welded to a second extrusion, which together with a pair of steel bushes, forms the rotor of the door hinge. The hinge stator (or hinge bracket) is bolted to an outrigger on the chassis and houses two maintenance free plastic bearings inside of which the rotor bushes pivot.

Door hinge adjustments

In order to provide for adjustment of door shutlines, the door hinge may be adjusted in two ways:

i) Height of the hinge, its fore/aft position, and the pivot axis angle (to control the front/rear height alignment) may be adjusted after slackening the hinge bracket fixing bolts. The tapping plates for these bolts are linked in vertical pairs and are captive, but loose, within the chassis outrigger, and allow for some vertical movement. Horizontally slotted fixing holes in the hinge bracket allow for fore/aft movement.

ii) Slotted shim plates fitted between the hinge bracket and chassis, allow the in/out door front edge alignment to be adjusted in steps of 1mm, and by varying the shim pack at the top and bottom pairs of fixings, the vertical alignment, as viewed from the front, may be adjusted.

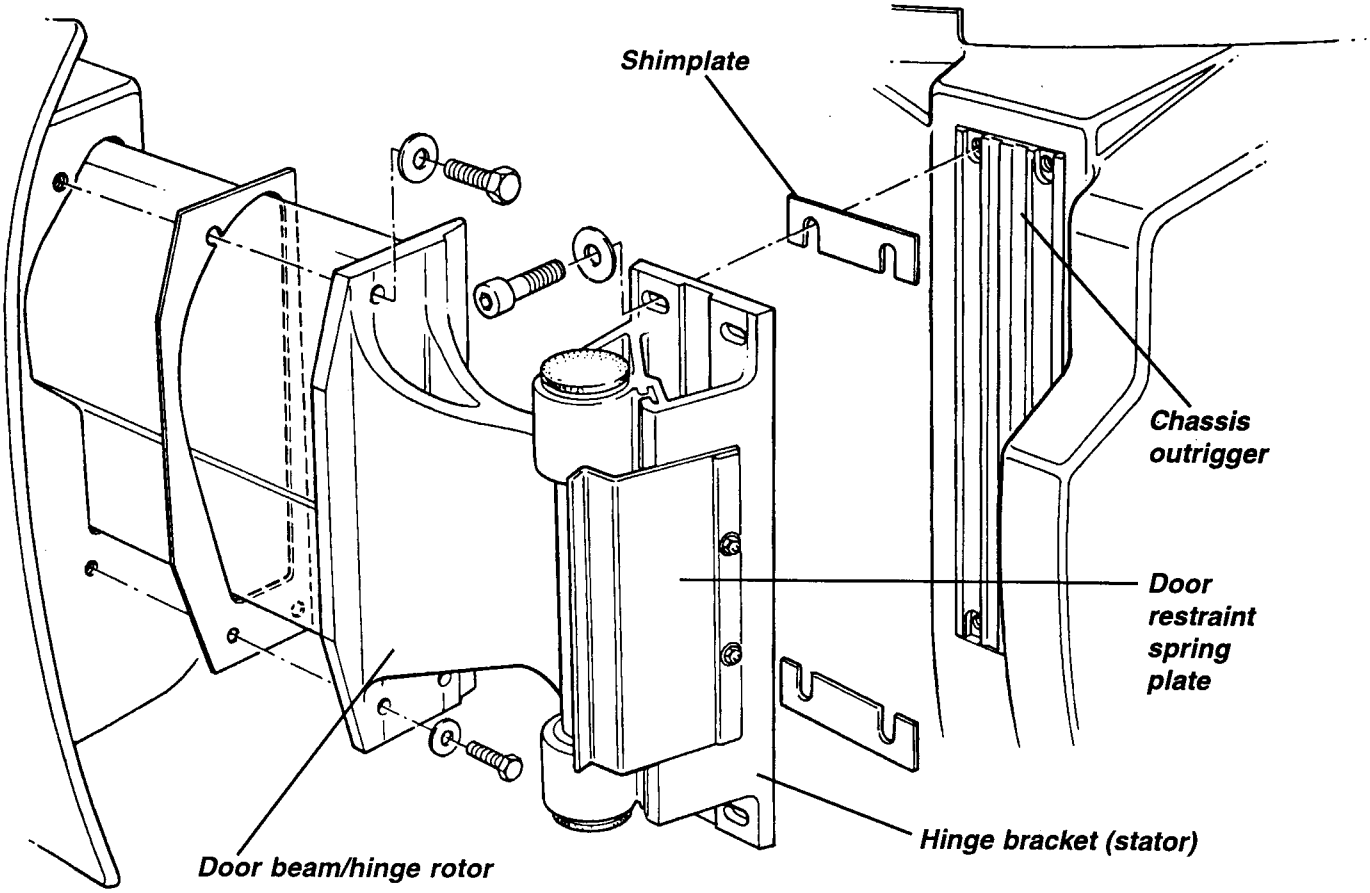

Ensure that the clamping load of the hinge bracket to the chassis is not corrupted by the shim plates bearing against the body. If the surrounding body stands proud of the chassis door hinge outrigger, use a suitably cut down shim plate to act as a spacer between the chassis and the adjustment shim pack or hinge bracket.

Door beam pivot bearings

The door beam hinge uses two self lubricating plastic 'top hat' section thin wall bearings, pressed into the hinge stator bracket. Inside each bearing, is fitted a 'top hat' section steel rotor bush, clamped to the door beam extension by an M10 cap head screw threaded into the door beam.

The door beam extension also incorporates a check flange which abuts against a rubber strip on the hinge bracket to limit door opening angle. A spring steel plate fixed to the front of the hinge bracket is designed to engage around the profiled edge of the door beam abutment flange when the door is fully open, in order to provide a sprung restraint for the door in this position.

To remove the door assembly, or for access to the door pivot components, the two M10 cap head rotor bush retaining screws should be removed, and the door assembly withdrawn from the hinge bracket. The rotor bushes and/or bearings may then be withdrawn from the hinge bracket. On re-assembly, note that the bearings and bushes are assembled dry from above and below the upper and lower housings respectively, and the cap head screws tightened to 45 Nm. Insert the rubber bungs into the bush ends to inhibit dirt ingress and corrosion.

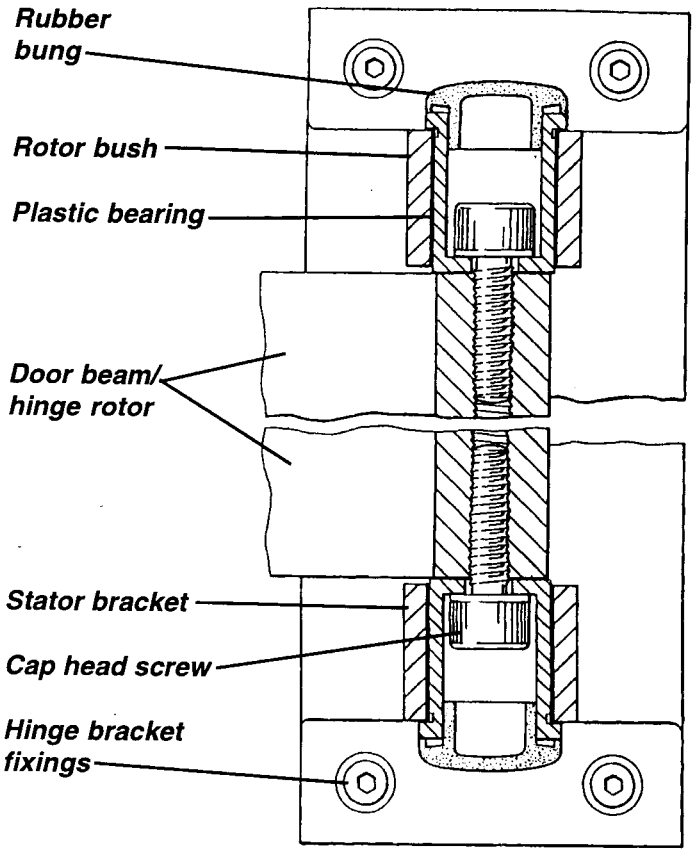

BN.8 - DOOR SHELL ASSEMBLY

The door shell is mounted on the door beam via three screws through a flange at the front end of the beam, and by the door latch mounting bracket at the rear end. In order to provide fixing points for the beam, lock mechanism and other components, the door shell includes various tapping plates and brackets bonded to the inside of the shell, and also contains the window front guide channel which is captive within the shell after the inner and outer door mouldings have been bonded together during manufacture.

If a door is to be removed from the car, the preferred method is to release the M10 cap head screws clamping the upper and lower bushes to the door beam. The beam and door shell assembly may then be withdrawn from the hinge stator bracket without losing adjustment of the hinge alignment and door shutlines. If the door shell has to be removed from the beam for repairs or replacement, the beam may be left 'in situ' and the door shell slid off the beam using the following procedure:

Removal of door shell from beam

The door shell is secured to the beam via three screws through a flange at the front end of the beam, tapping into nut plates bonded into the door shell, and via two bolts at the rear end of the door to the door beam extension bracket. Access to the two rear bolts requires that the door glass first be released:

1. Remove the trim panel around the interior release handle: Remove the two screws in the front edge of the finisher, and unhook the finisher from the handle and door shell.

2. Release the three screws securing the interior release handle, and unclip the control rod from the mechanism.

3. Remove the door trim panel: Unclip the cap from the window winder handle, release the retaining screw and withdraw the handle. Release the seven fixing screws, and remove the door trim panel.

4. Remove the two M6 and the single M8 screws securing the door beam flange to the front of the door shell.

5. Release the three M6 nuts securing the door glass to the lift channel, and separate the glass from the channel. Tilt the glass as necessary to allow access to the two M8 bolts fixing the rear end of the door

beam to the extension bracket. Remove the bolts, noting any spacer washers used on the upper bolt between the glass rear guide channel fixing bracket and the door beam, and withdraw the door assembly off the beam.
Note that it is necessary to remove the drop glass inner waist seal before the glass may be withdrawn from the door.

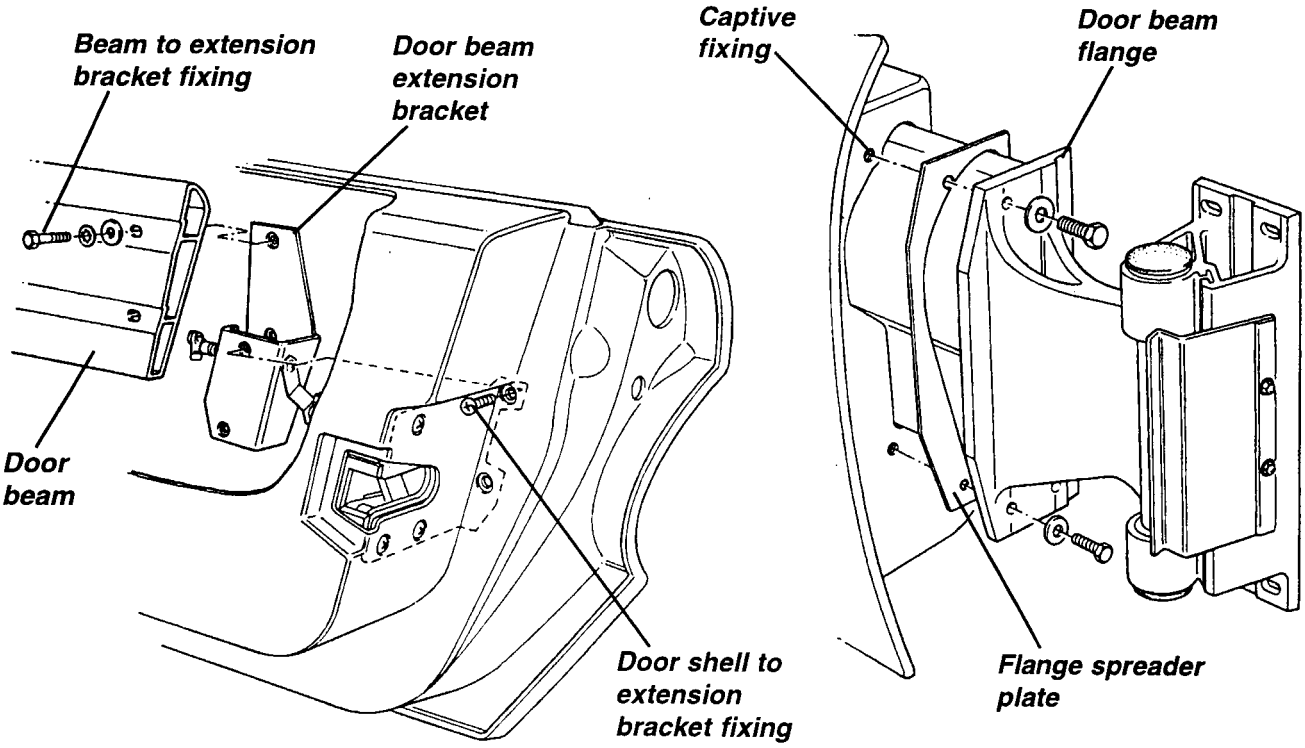

When refitting the door, remember to first fit the flange spreader plate onto the beam before mounting the door shell. Take care not to scratch the glass if this is contained in the door. Insert the two rear bolts securing the beam to the latch bracket, but do not tighten until the three fixings securing the front of the shell to the beam flange have been fitted and tightened. It may be necessary to leave the tightening of the top rear fixing (also secures the rear guide rail) after the glass has been fitted and the position of the rear guide rail adjusted.

BN.9 - DOOR GLASS, GUIDE CHANNELS & WINDER MECHANISM

A manually operated door window scissor type lift mechanism is used in conjunction with two aluminium guide channels and a 'frameless' door design.

The operating principle of the window lift mechanism is that of a scissor linkage, with the front lower end of the primary leg anchored to the door shell, the lower end of the secondary leg sliding in a horizontal channel on the door shell, and the upper ends of both legs sliding in a channel fixed to the bottom of the window. The geometry of the system provides for a parallel lift of the glass, where the angle of the bottom edge does not change throughout the range of travel. A forward extension to the primary scissor leg carries a toothed sector which is engaged by a pinion on the window winder. The glass is guided by front and rear, felt lined, alloy channels, both of which are bolted to the door shell or beam, with various adjustments provided to control the inward tilt of the glass, its up height, and the angle of the top edge.

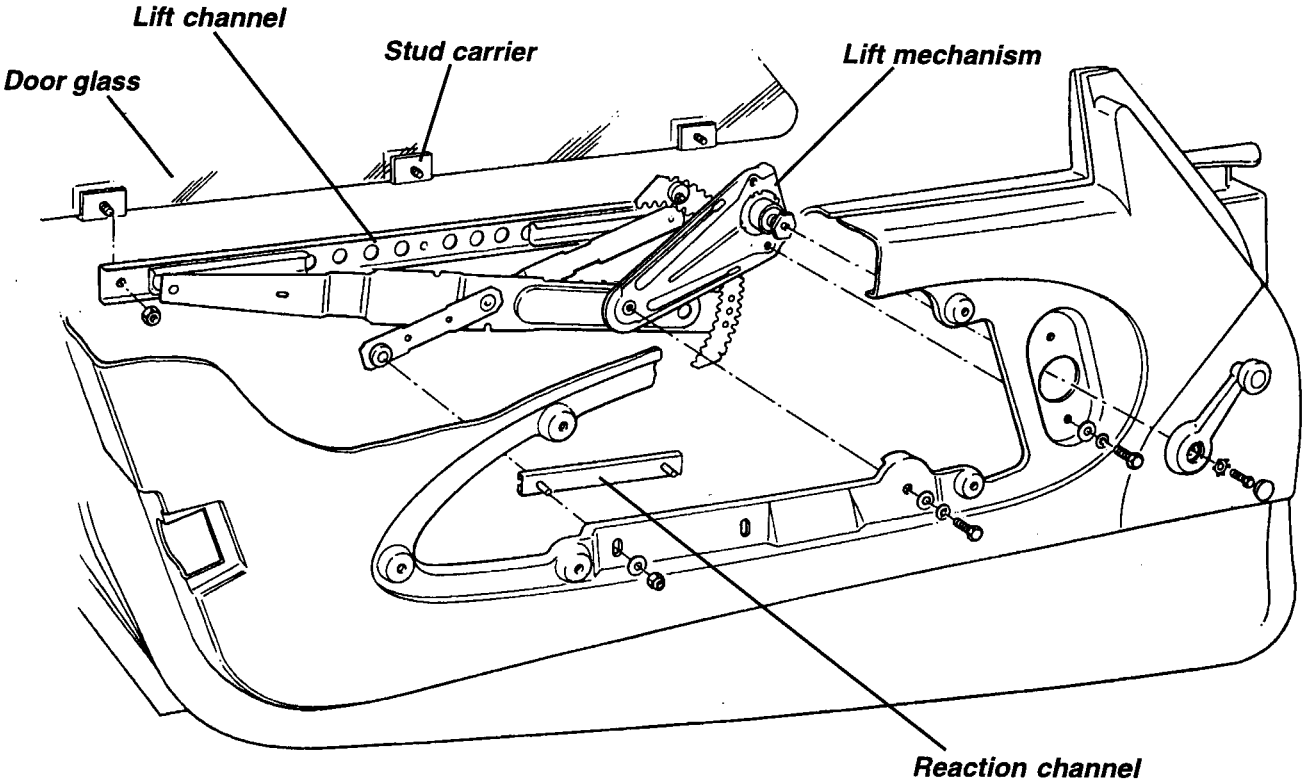
Lift channel
Door glass
Stud carrier
Lift mechanism
Reaction channel

b246

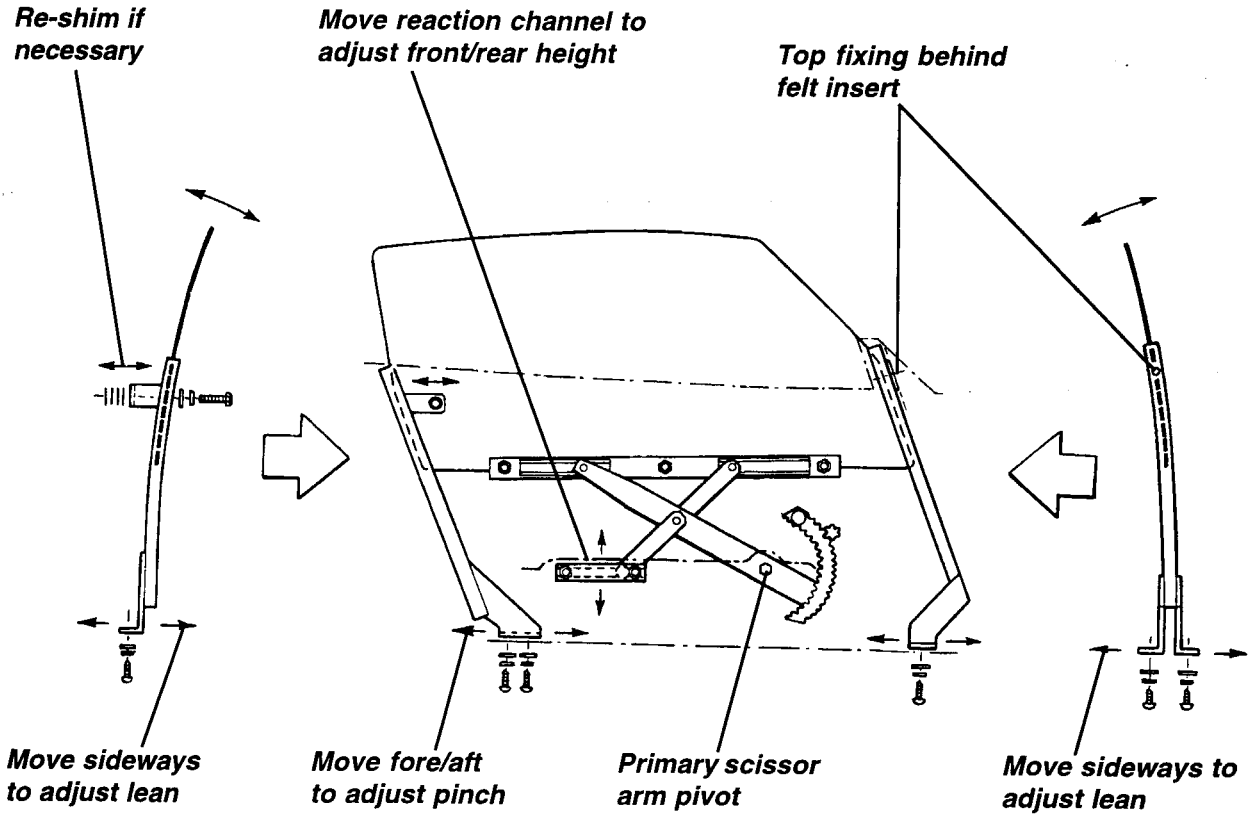
Re-shim if necessary
Move reaction channel to adjust front/rear height
Top fixing behind felt insert
Move sideways to adjust lean
Move fore/aft to adjust pinch
Primary scissor arm pivot
Move sideways to adjust lean

b285

Door Glass Adjustment

To adjust the door glass for optimum weather sealing and ease of operation:

1. Remove the window winder handle and door trim panel. Check that the top end of the toothed sector is fitted with an eccentric stop. If not so fitted, drill an M6 clearance hole through the sector in the position shown and fit a mesh friction washer between the eccentric and the sector.

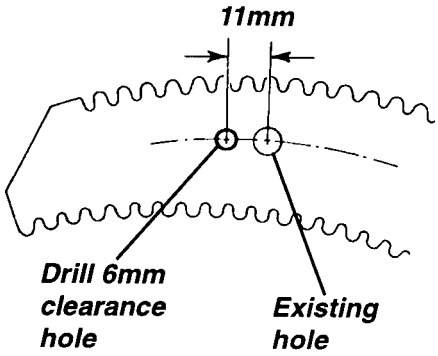

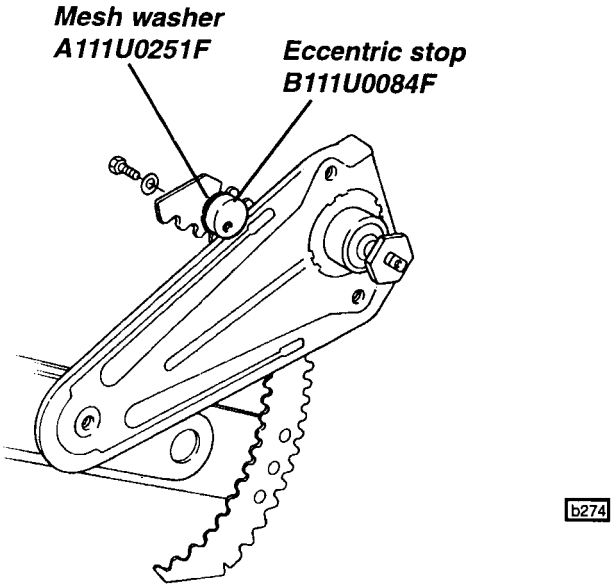

2. Establish whether the car is fitted with window upstop 'L' brackets, introduced in November '96 at VIN V 244. Note that it is not practicable to update earlier cars due to the requirement for captive fixings within the door beams.

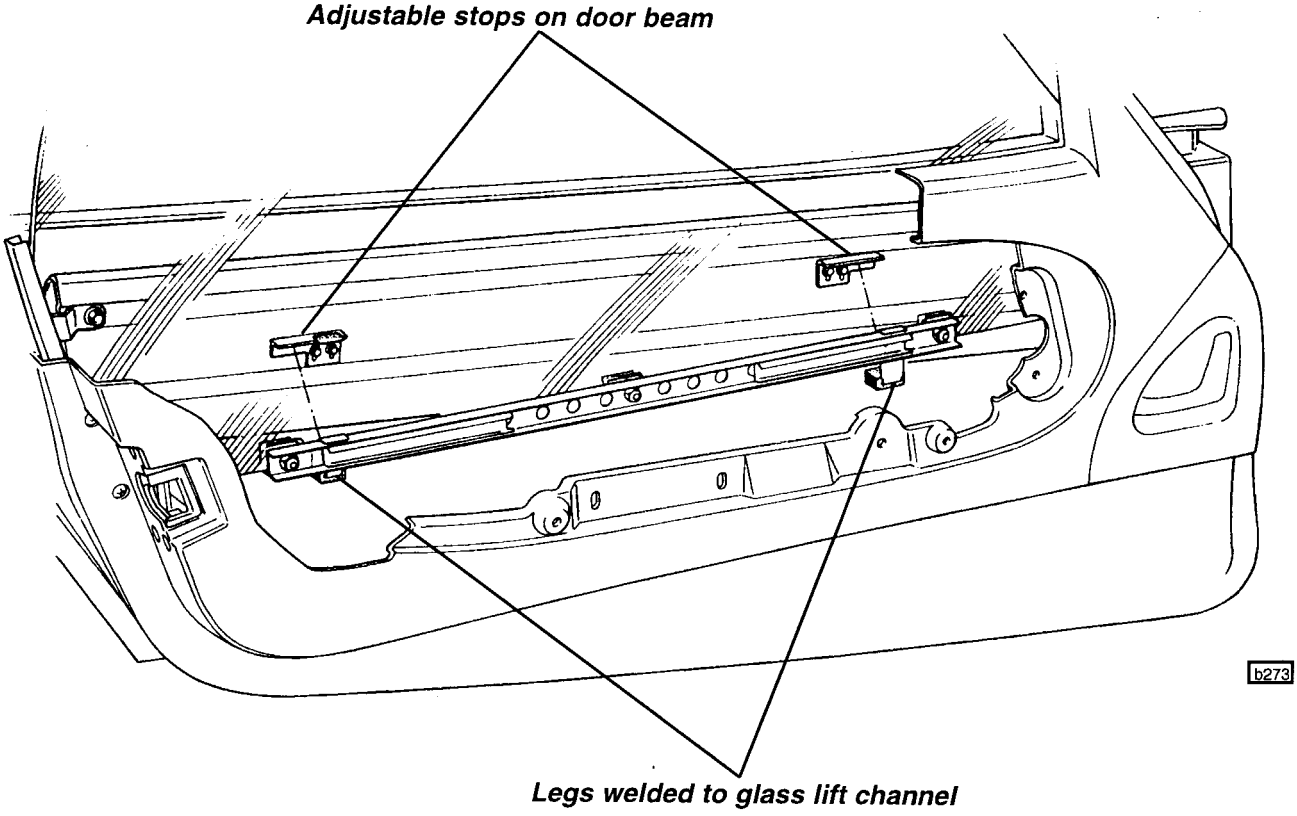

3. Apply 'Krytox' P.F.P.E. lubricating fluid (A082V6239S) to the window guide channels and weatherstrips to reduce stiction, judder and operating loads.

4. With the window fully raised, check the pressure of the front and rear glass edges against the 'A' and 'B' post seals. The glass should make light contact with the whole length of the seal and allow easy operation of the glass up and down. If necessary, slacken the lower fixings of the front and rear guide channels to the bottom face of the door shell, and reposition as required, In extreme cases it may be necessary to adjust the shim pack between the rear guide upper fixing and the door beam to achieve the desired 'B' post seal fit, or to avoid overloading the door waist seal. Before final tightening, ensure that the 'pinch' (fore/aft) setting of the channels is correct to allow smooth operation without binding.

5. With the soft top roof fitted and the window fully raised, check the alignment of the glass top edge against the soft top roof and cant rail. The whole of the glass top edge should make light contact with the soft top material. If necessary, slacken the eccentric adjuster on the toothed sector, and the reaction channel to the door shell. Then:

   If no upstop 'L' brackets are fitted on the door beam:
   Overall glass height is controlled by the eccentric stop, and fore/aft alignment height by the position of the reaction channel. To *raise* the front edge of the glass, *lower* the reaction channel in the door. Check that the glass slides easily throughout its range, amending the angle of the reaction channel if necessary.

   If upstop 'L' brackets are fitted on the door beam:
   Check the overlap of the rear upstop brackets and if necessary amend the shimpack between 'L' bracket and door beam to achieve an overlap of 4 - 5 mm. Correct the glass top edge alignment and height by adjusting the position of the two upstop brackets on the beam. Tighten the reaction channel fixings, and check that the glass slides easily throughout its range, amending the angle of the reaction channel if necessary. With the glass fully raised, set the eccentric stop to protect the 'L' brackets from being overloaded by winder operation.

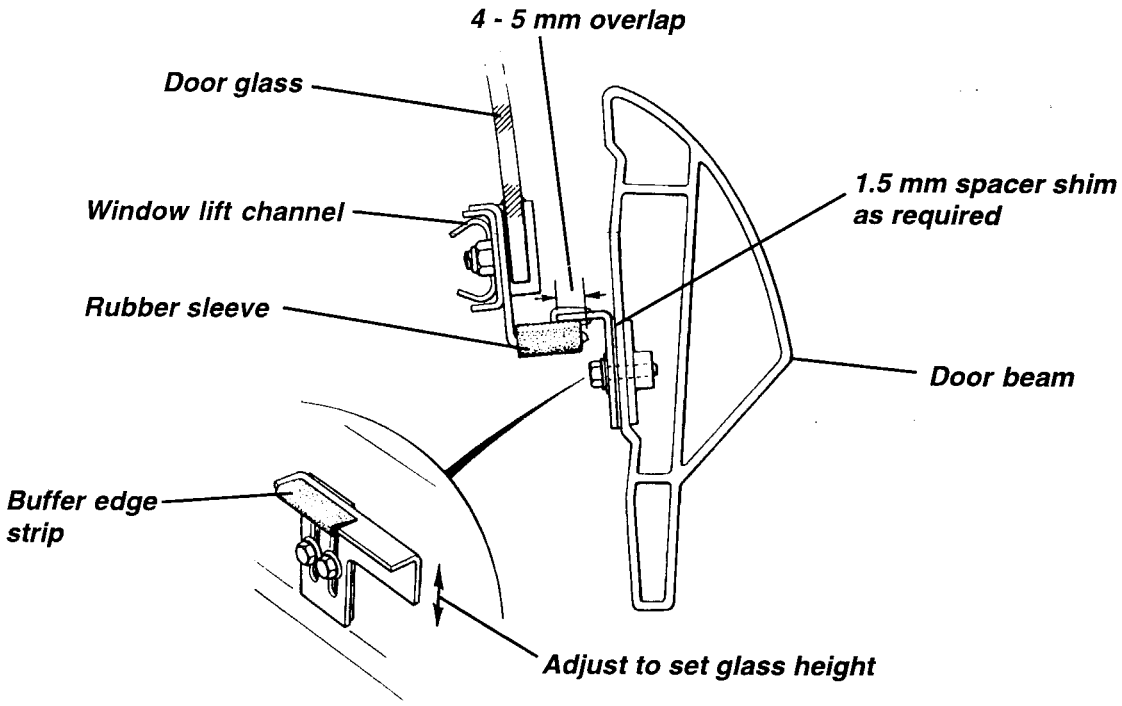

b274

Blank page

To replace door window glass

1. Remove the trim panel around the interior release handle: Remove the two screws in the front edge of the finisher, and unhook the finisher from the handle and door shell.

2. Release the three screws securing the interior release handle, and unclip the control rod from the mechanism.

3. Remove the door trim panel: Unclip the cap from the window winder handle, release the retaining screw and withdraw the handle. Release the seven fixing screws, and remove the door trim panel.

4. Release the three M6 nuts securing the door glass to the lift channel, and separate the glass from the channel.

5. Do not attempt to withdraw the glass from the door without first removing the door glass inner waist seal, or damage to one or both waist seals will result. With the door glass lowered clear of the waist seals, carefully pull the inner seal off the horizontal flange.

6. Slide the door glass upwards and out of the door.

   Refit in reverse order to removal.

Note that new door glasses are supplied complete with the stud carriers bonded to the lower edge, but if a carrier should become loose or detached, the old adhesive should be cleaned off, the bonding surfaces cleaned with Betaclean 3900 (A100B6008), and the following products used to rebond the carrier, following the adhesive manufacturer's instructions:

Permabond Initiator INI 5	A000Z0043F
Permabond Flexon F246	B089B6125V

When re-bonding, ensure that the studs align with the holes in the carrier channel and leave to cure overnight before re-assembling. Note that some penetrant lubricants (e.g. WD40) have a detrimental effect on the bonding medium, and should be used only with discretion.

To replace door winder mechanism

1. Remove the door trim panel: Unclip the cap from the window winder handle, release the retaining screw and withdraw the handle. Release the seven fixing screws, and remove the door trim panel.

2. Remove the interior release control rod for improved access: Unclip the control rod from the interior release handle, and unhook from the latch mechanism.

3. Tape the door glass in the fully raised position, then remove the three fixings securing the lift mechanism to the door shell:
   - two fixings adjacent to the winder spindle;
   - one fixing through the static pivot of the primary scissor arm.

4. Maneouvre the mechanism to free the winder spindle from the door, and to disengage the upper sliding bosses of the scissor arms from the window lift channel, and the lower sliding boss of the secondary arm from the static reaction channel.

5. Withdraw the mechanism from the door.

6. Before fitting a lift mechanism, lubricate the three slider bosses and the sector teeth with Century Luplex M2 grease (or similar). Fit the mechanism into the door and engage the three slider bosses in their lift and reaction channels before securing with the three fixing screws. Note that a single M6 spacer washer is used between the pivot of the primary scissor arm and the door shell.

7. An eccentric stop is fitted to the top end of the toothed sector to limit the upward travel of the glass, and slotted fixing holes for the reaction channel allow for some adjustment to the top edge tilt to be made.

Check that a metal gauze friction washer is fitted between the eccentric stop and the toothed sector before checking the glass position:

- Erect the soft top roof and raise the door glass to assess the fit of the glass against the roof and 'A/B' post seals.
- If necessary, adjust the eccentric upstop and the reaction channel fixing position and/or the glass guide channels (see below) to achieve a light contact between the whole of the glass edge and the seals.

Door glass guide channels

The front guide channel is secured by two screws through the bottom face of the door shell into captive spring steel nuts on the channel bottom flanges, and by a single countersunk screw at the top end into a captive M5 nut in the mirror mount area. This top screw is covered by the guide channel insert ('silent channel'). Note that the front guide channel is positioned in the door during manufacture, and cannot readily be removed. Any adjustments to door glass inward tilt can be accommodated by moving the lower end of the rail as required.

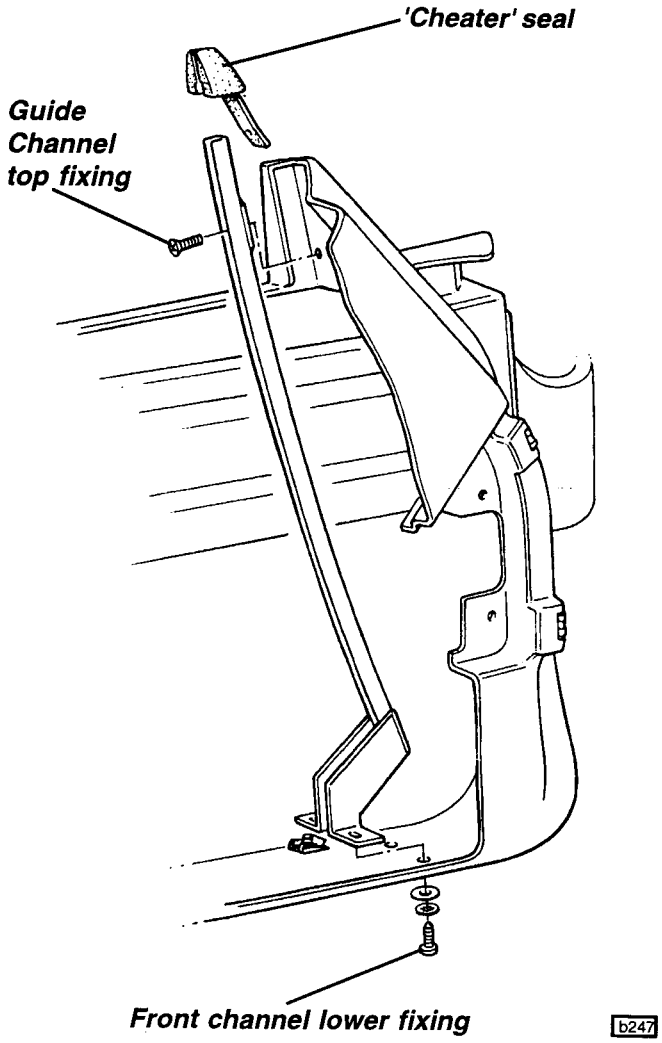

The rear guide channel is secured by two screws through the bottom face of the door shell into captive spring steel nuts on the channel bottom flanges, and by a bracket at the top end fixed by the door beam top rear fixing bolt. The channel must be positioned to allow the glass to slide smoothly, and with an inward tilt to provide adequate contact with the door glass weatherstrips and roof. Spacer washers are fitted as required between the rear channel top fixing and the door beam.

To replace the rear guide channel or the channel inserts ('silent channels'), the door glass should first be removed (see above). The inserts are self locating in the channels, but may require some lubrication with a silicone spray before fitting, but take care not to contaminate the stud carrier adhesive on the bottom of the door glass.

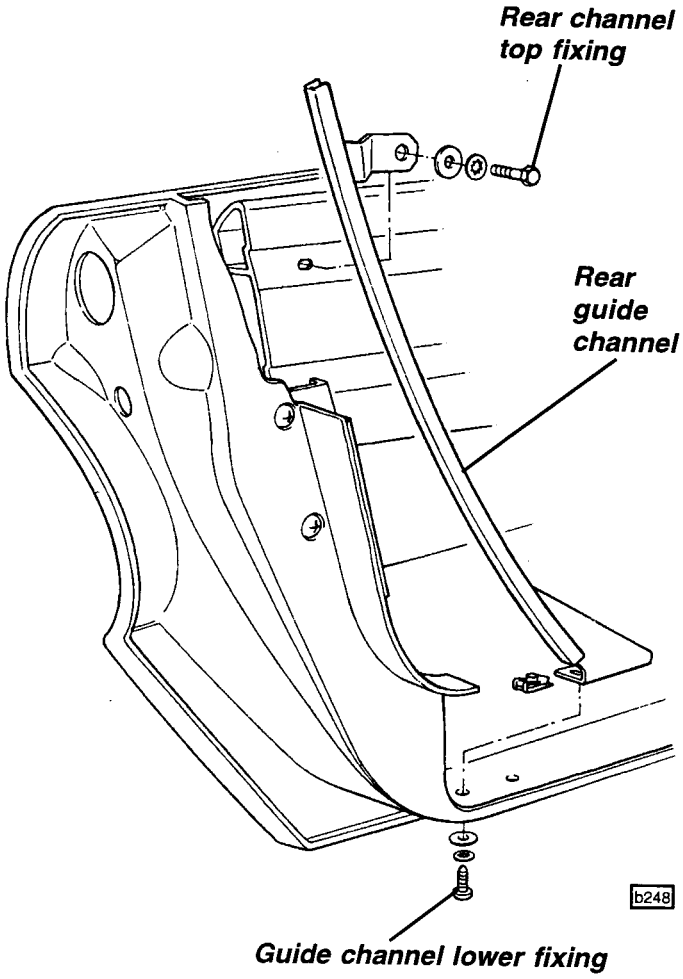

BN.10 - DOOR SEALS

Drop Glass Inner 'Waist' Seal

The hollow section inner seal is flocked on its glass contact surface, and is pressed onto a horizontal metal flange bonded to the door inside top edge. The seal should be removed before the door glass is withdrawn from the door.

Drop Glass Outer 'Waist' Seal

The door glass outer waist seal has a wipe section flocked on its inside surface to seal against the glass, and is secured by double sided tape and steel 'U' clips to a vertical metal flange bonded to the door outer top edge. The door glass must be withdrawn from the door (see sub-section BN.9) before access to the seal fixings is available.

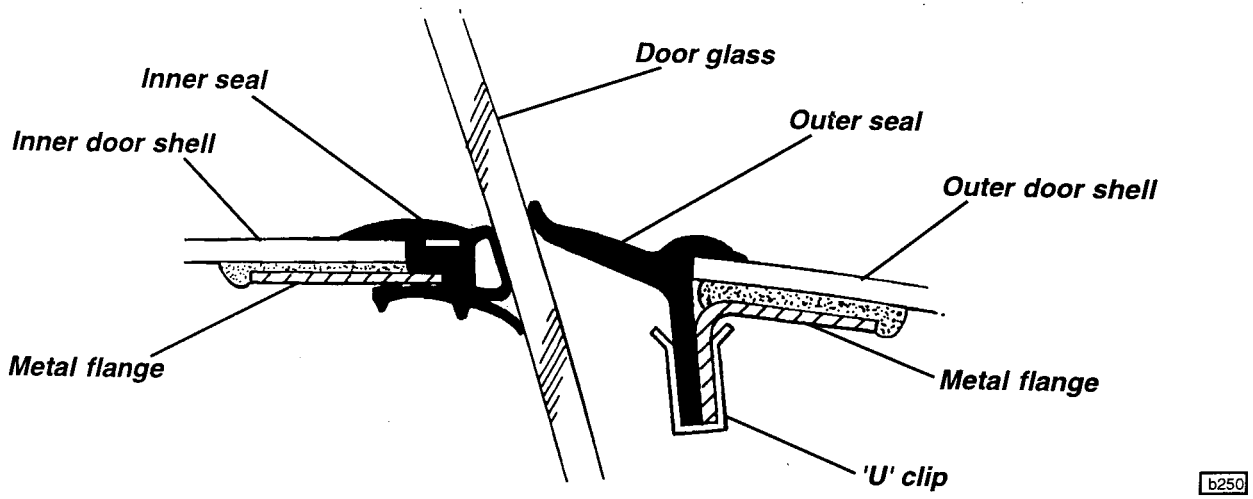

To fit a new outer seal:

1. Compare the new and old seals, and if necessary, cut additional slots in the new seal to allow it to be formed to the profile of the door top surface. Chamfer the lower rear corner to allow the seal to fit correctly in the door.

2. Clean the flange on the door shell and the vertical mating face on the new seal with Betaclean 3900 (A100B6008), and apply PP Primer 3842 (A082U6199V) to both surfaces.

3. Apply double sided tape to the whole length of the flange, and a thin bead of black Silastic under the outside lip of the seal. Fit the seal onto the flange with the outer lip bedded against the door top edge, and secure with eight spring steel 'U' clips.

Door Weatherstrip

A hollow section rubber weatherstrip is bonded onto the door aperture to seal against the door shell. A stiffener buffer is inserted into the seal in the area of the latch striker pin, and a small 'D' section 'weir' is stuck to the front shut face of the door to provide optimum sealing of this area.

Before fitting a new weatherstrip, ensure first that the foam rubber tapered packing strip is fitted to the top part of the windscreen pillar; degrease the appropriate area on the pillar, and apply PP Primer 3842 (A082U6199V) to both the pillar and packing strip. Lay double sided tape onto the pillar, and fit the packing strip, tapered end downmost, into position snugly against the sides of the recess.

To fit the weatherstrip:

- Shape the front end of the seal to fit in the recess in the windscreen header rail.
- Degrease the landing area and apply PP Primer to the aperture and seal bonding surface, including the screen pillar foam packing strip.
- Apply double sided tape around the aperture.
- Fit the weatherstrip onto the tape, positioning snugly against the sides of the recess. Leave sufficient length at the rear end of the seal to allow it to be capped by the roll bar fairing.

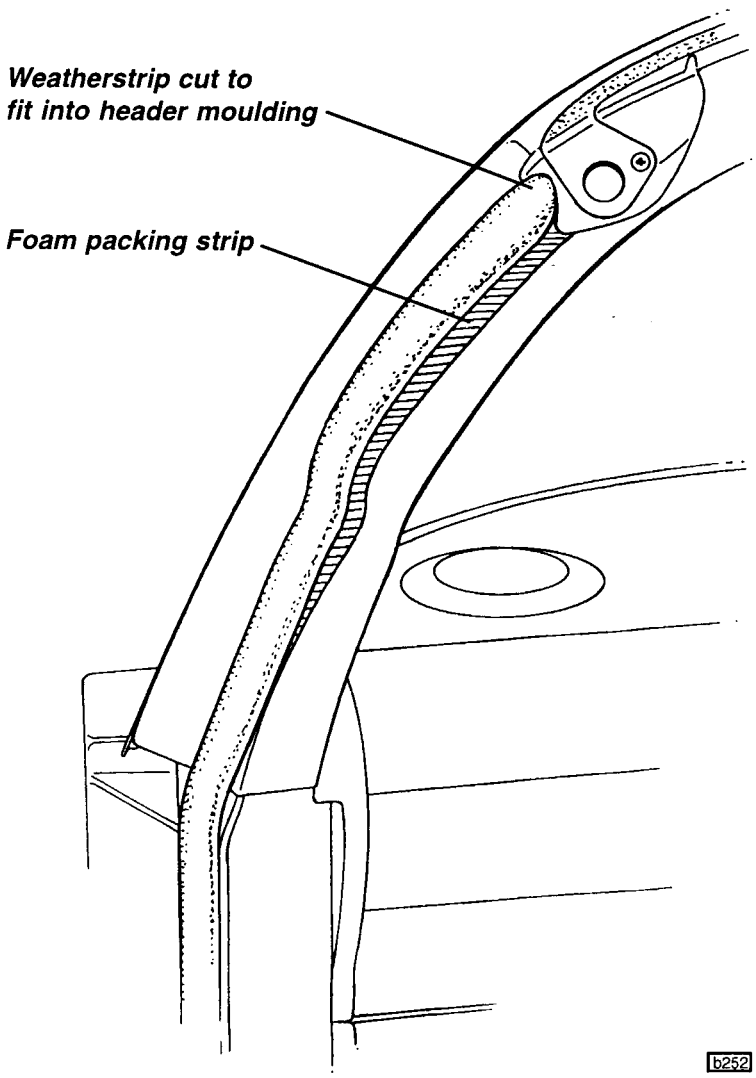

- Insert the buffer into the rear end of the weatherstrip by threading a stiff wire down the centre of the seal, via an entry hole through the rear face of the seal approximately 25 mm below the latch striker pin. Attach the buffer to the wire, and draw the buffer through the seal until centralised about the latch striker pin. Remove the wire, and seal the hole in the weatherstrip.

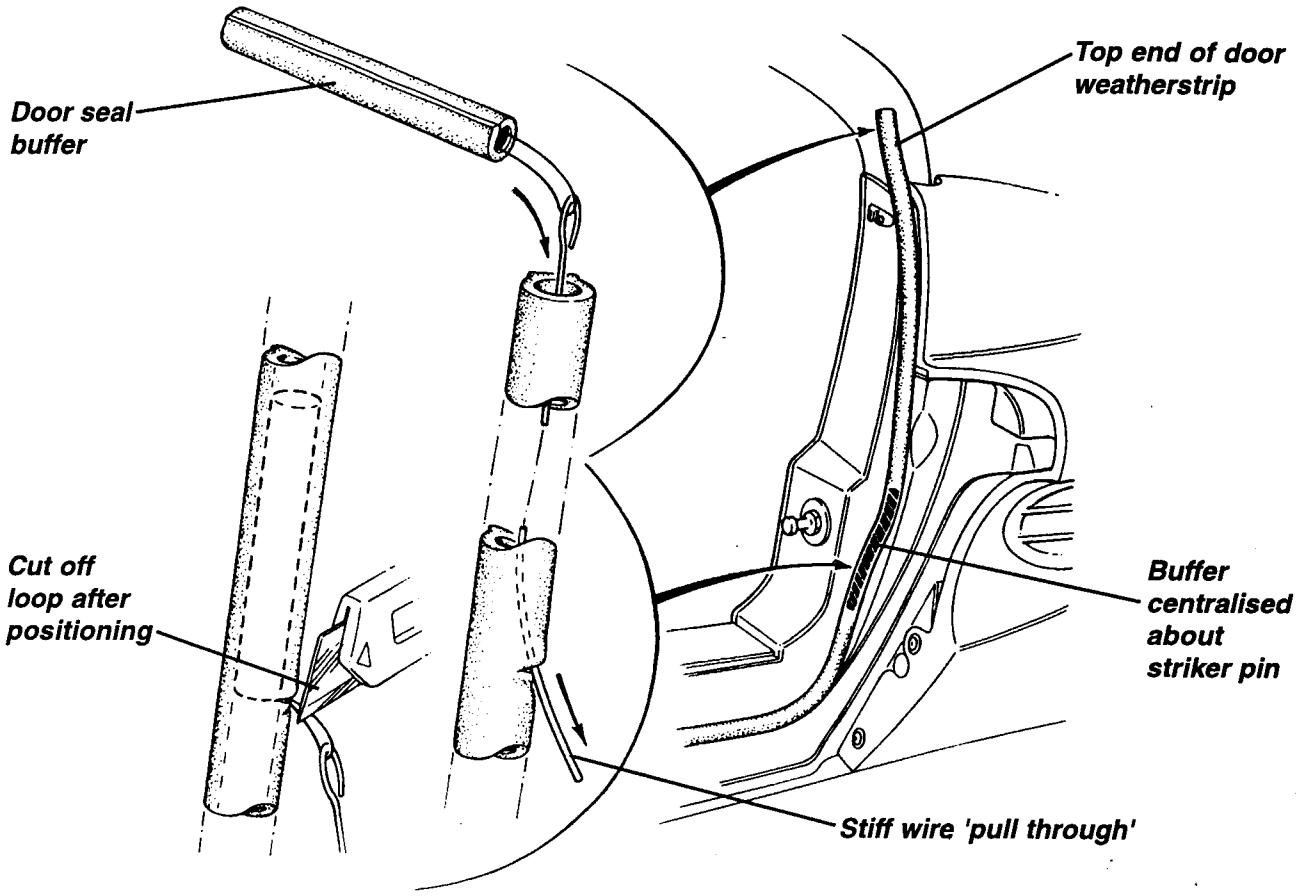

b254

Door Weir

A 377 mm length of small 'D' section hollow rubber weir is stuck to the front shut face of the door, 15 mm from the outer edge of this surface. Double sided tape is used after the surfaces have been degreased and primed with PP Primer 3842.

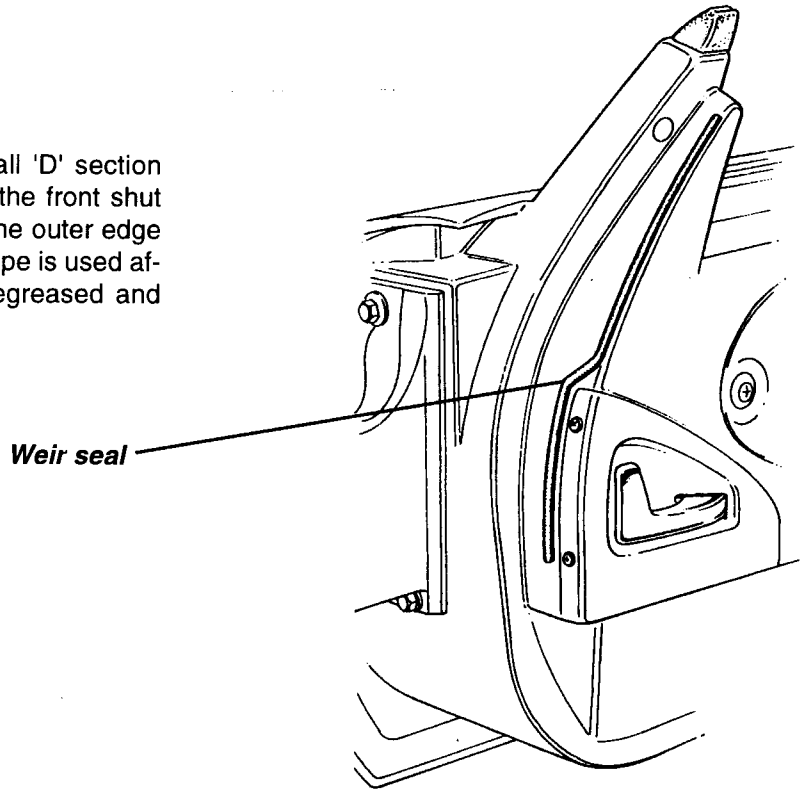

b253

BN.11 - DOOR LATCH MECHANISM

The door latch mechanism is fitted inside the rear face of the door, which is reinforced by a steel plate bonded to the glass fibre composite door shell. The latch engages with a striker pin which passes through the composite sill/'B' post moulding, into a captive nut on the roll over bar. An external locking door release button is mounted through the top rear of the door outer shell, and transmits its motion around the rear edge of the door glass to the latch mechanism via two short links and a relay lever.

The interior release handle is mounted forward in the door inner shell, and is connected to the latch mechanism by a control rod. No interior control of door locking is provided.

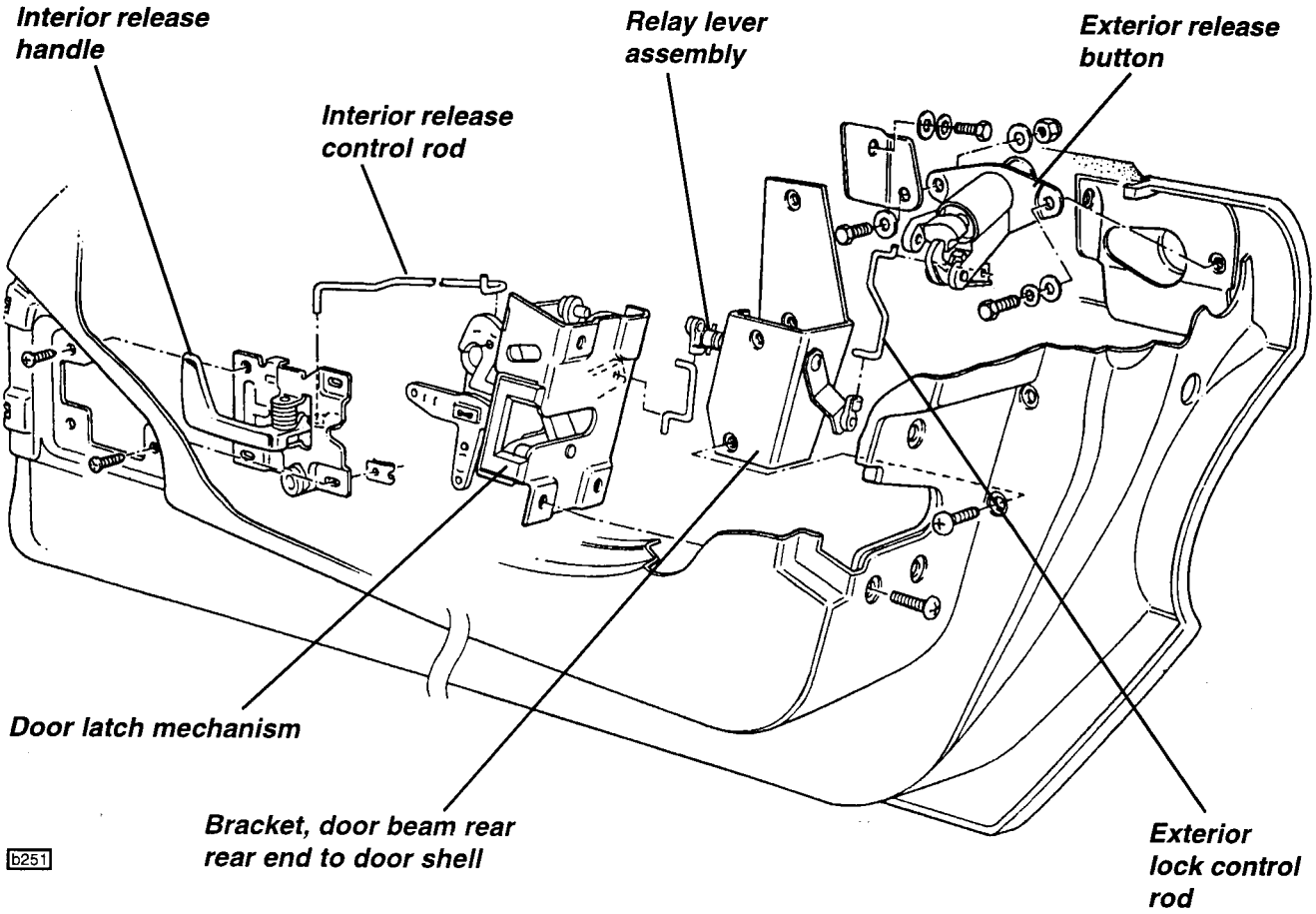

To replace interior release handle

Remove the release handle trim panel by releasing the two screws in the panel front edge, and unhooking the panel from the door and over the handle. Remove the three screws securing the handle assembly to the door, and unclip the control rod end clip to enable the rod to be unhooked from the handle. After refitting, ensure that the control rod is fitted into the two rod guide clips.

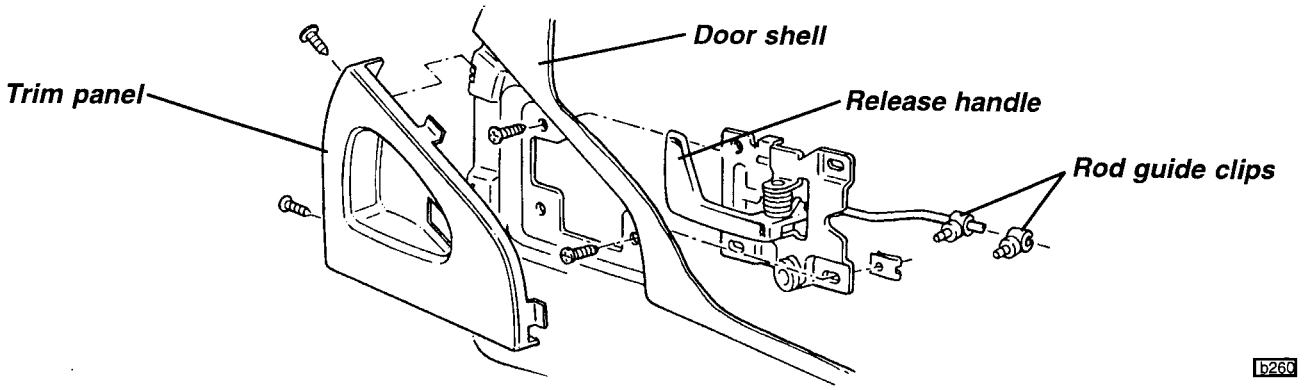

To replace the exterior release button

Remove the access disc from the rear face of the door, and the rod access grommet lower down. Release the two screws securing the lock assembly and angle bracket to the tapping plate bonded in the door shell. Unclip the link rod from the relay lever, and withdraw the lock button from the door.

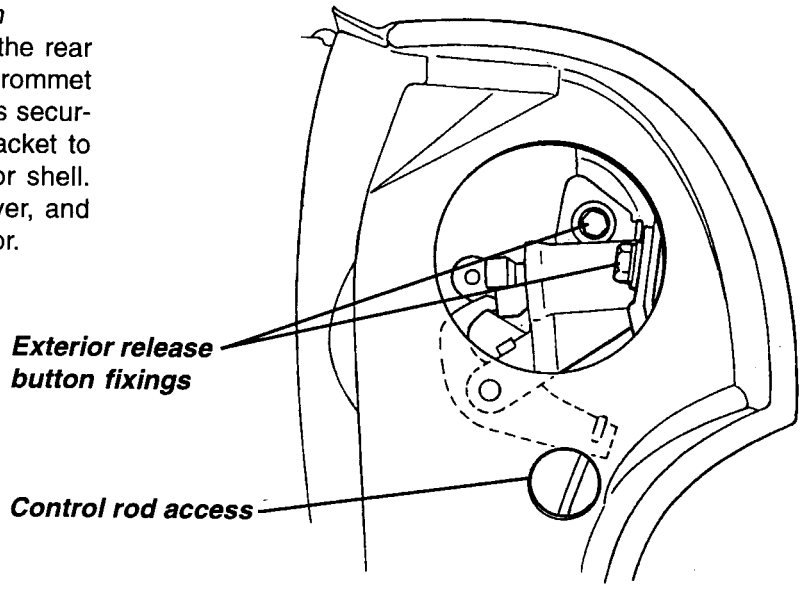

b255

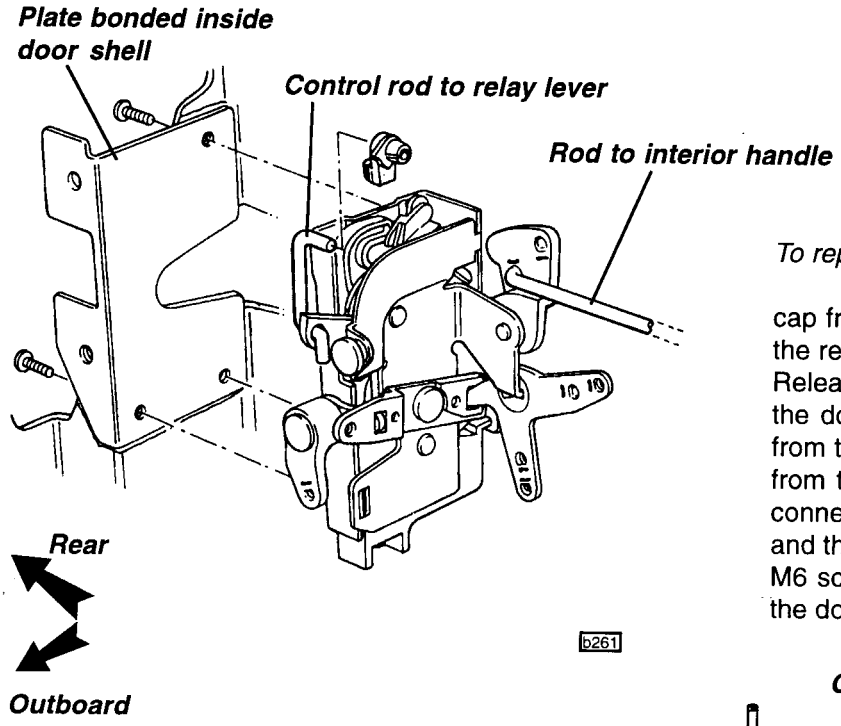

b261

To replace the latch mechanism

Remove the door trim panel: Unclip the cap from the window winder handle, release the retaining screw and withdraw the handle. Release the seven fixing screws, and remove the door trim panel. Unclip the control rod from the interior release handle, and unhook from the latch mechanism. Unclip and disconnect the short link between the relay lever and the latch mechanism. Remove the three M6 screws securing the latch mechanism to the door, and withdraw the latch.

To replace the relay lever components

The relay lever components comprise a shaft with an integral lever on one end, which connects to the exterior lock button, and a second lever pinned to the other end, which connects to the latch mechanism. The shaft is supported in two fibre bushes housed in the bracket connecting the rear end of the door beam to the door shell.

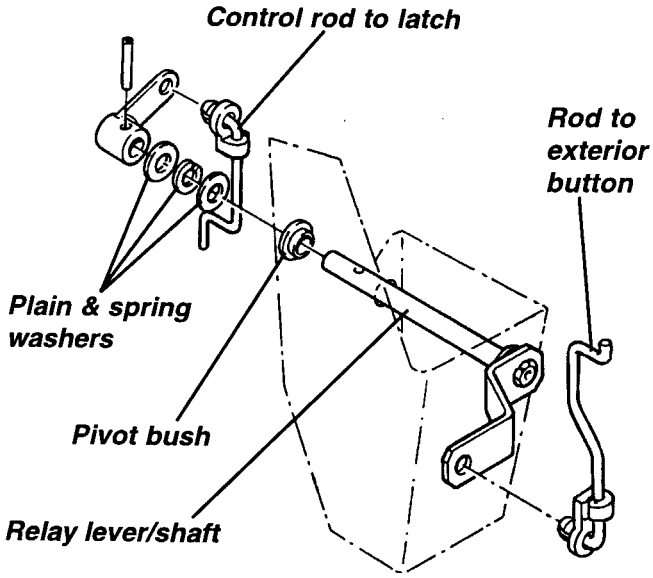

b256

To remove the door beam extension bracket:

1. Remove the trim panel around the interior release handle: Remove the two screws in the front edge of the finisher, and unhook the finisher from the handle and door shell.

2. Release the three screws securing the interior release handle, and unclip the control rod from the mechanism.

3. Remove the door trim panel: Unclip the cap from the window winder handle, release the retaining screw and withdraw the handle. Release the seven fixing screws, and remove the door trim panel and plastic membrane.

4. Release the three M6 nuts securing the door glass to the lift channel, and separate the glass from the channel. (Do not attempt to withdraw the glass from the door without first removing the door glass inner waist seal, or damage to one or both waist seals will result)

5. Remove the access grommet from the rear face of the door, and unclip the exterior lock link rod from the relay lever. Similarly disconnect the link rod between the relay lever and the latch mechanism.

6. Support the door shell before removing the two M8 bolts fixing the rear end of the door beam to the end bracket, and the two screws securing the bracket to the door shell. Remove the bracket complete with relay lever assembly from the door.

7. Refit the bracket in reverse order to removal.

BN.12 - INSTRUMENT BINNACLE & DASH PANEL

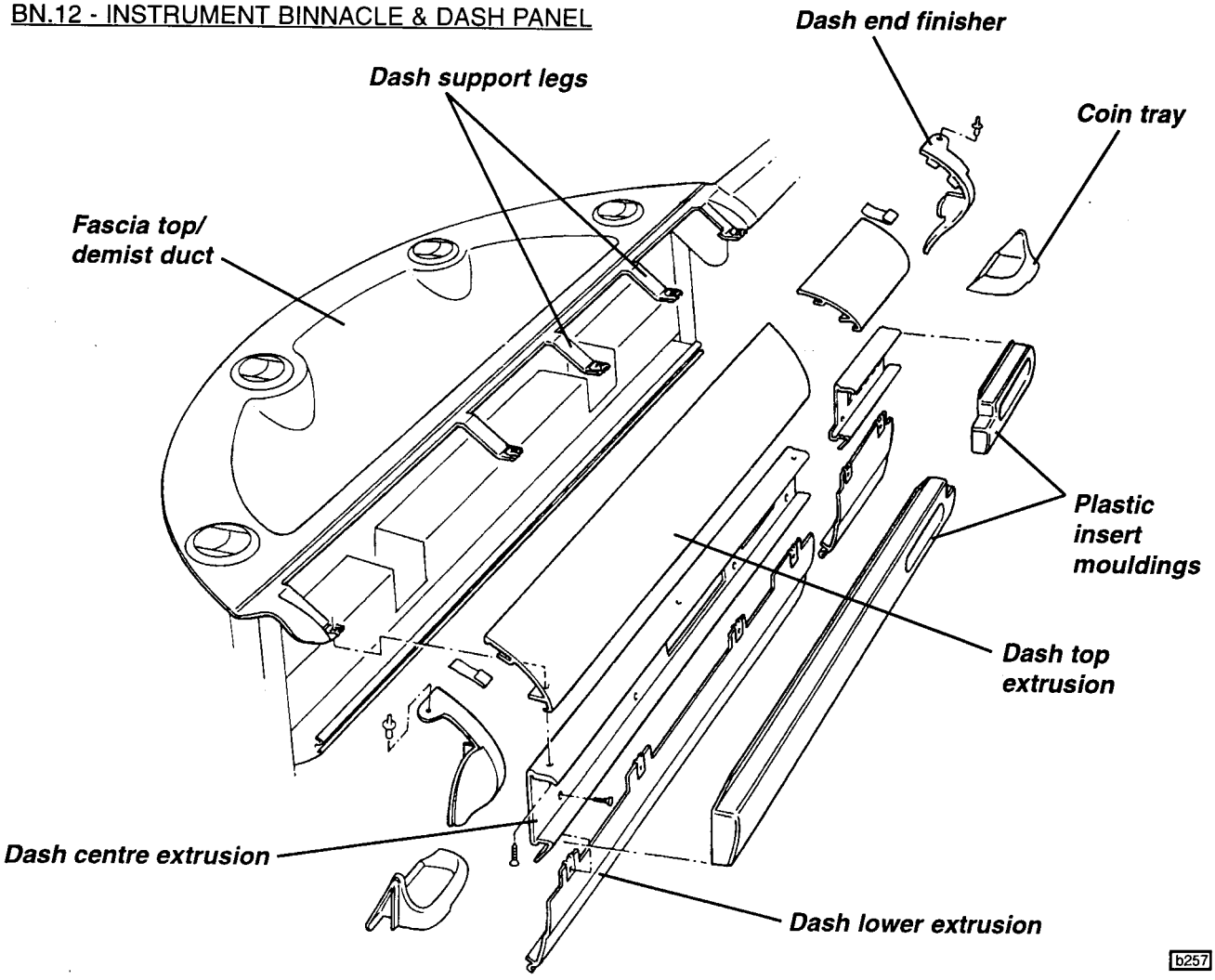

The instrument cluster is mounted, via a combination of brackets, off the steering column to scuttle mounting bolts, with the instrument cowl mounted onto the top of the cluster.

The dash structure principally consists of three aluminium alloy extrusions, upper, centre and lower, which link together horizontally to join the chassis scuttle beam to the fascia top/demist duct. All three sections are interrupted by the steering column. The longer section of the dash centre panel houses the climate controls and audio aperture, and the shorter section (outboard of the steering column) the row of push switches. A plastic insert moulding surrounds each of these controls. The upper dash panel extrusion is treated with 'Senotex' textured paint, as is the fascia top and inside surfaces of the windscreen surround.

To Replace Instrument Pack

For access to the instrument pack mounting brackets, it is necessary first to remove the column shroud:

- Release the four screws securing the shroud upper section, turning the steering wheel as necessary to permit access.
- Pull out the grommet from around the ignition switch, and remove the three screws securing the lower shroud to the column.
- If necessary, disconnect or remove the trip/panel lights control button and immobiliser socket from the lower shroud.

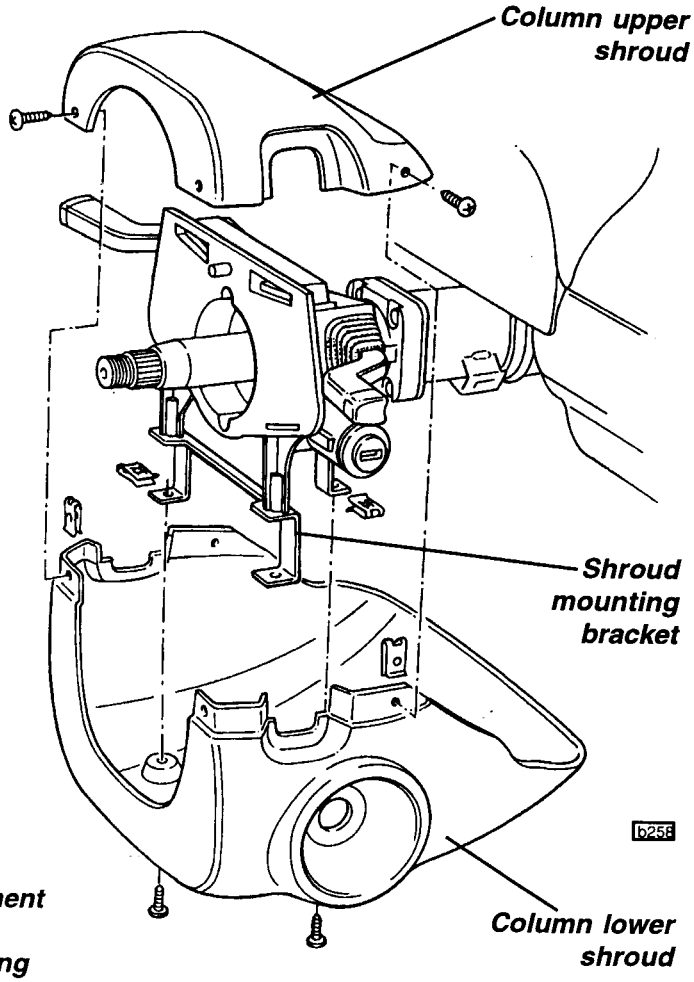

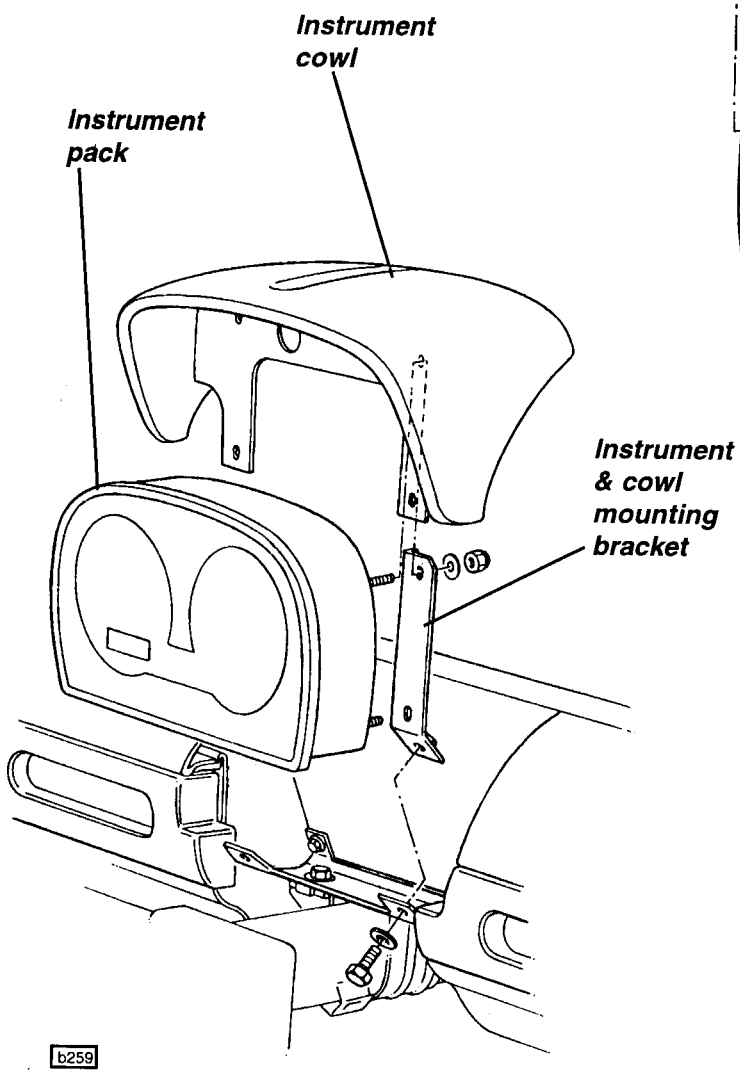

The two fixings for the instrument pack mounting brackets may now be released, and the single harness connector unplugged, allowing the instrument pack complete with cowl to be withdrawn. If necessary, release the four fixing nuts to separate the mounting brackets and cowl from the instrument pack.

To Dismantle Dash Panels

1. Release the four screws securing the steering column shroud upper section, turning the steering wheel as necessary to permit access.

2. Pull out the grommet from around the ignition switch, and remove the three screws securing the lower shroud to the column.

3. Squeeze the dash panel plastic moulding vertically, and pull out from the centre extrusion.

4. Release the three screws securing the dash top and centre extrusions to support legs on the fascia top (two screws outboard of column), and unclip the panel from the fascia. Note the spring steel clips used along the top edge of the dash top extrusion to inhibit rattles.

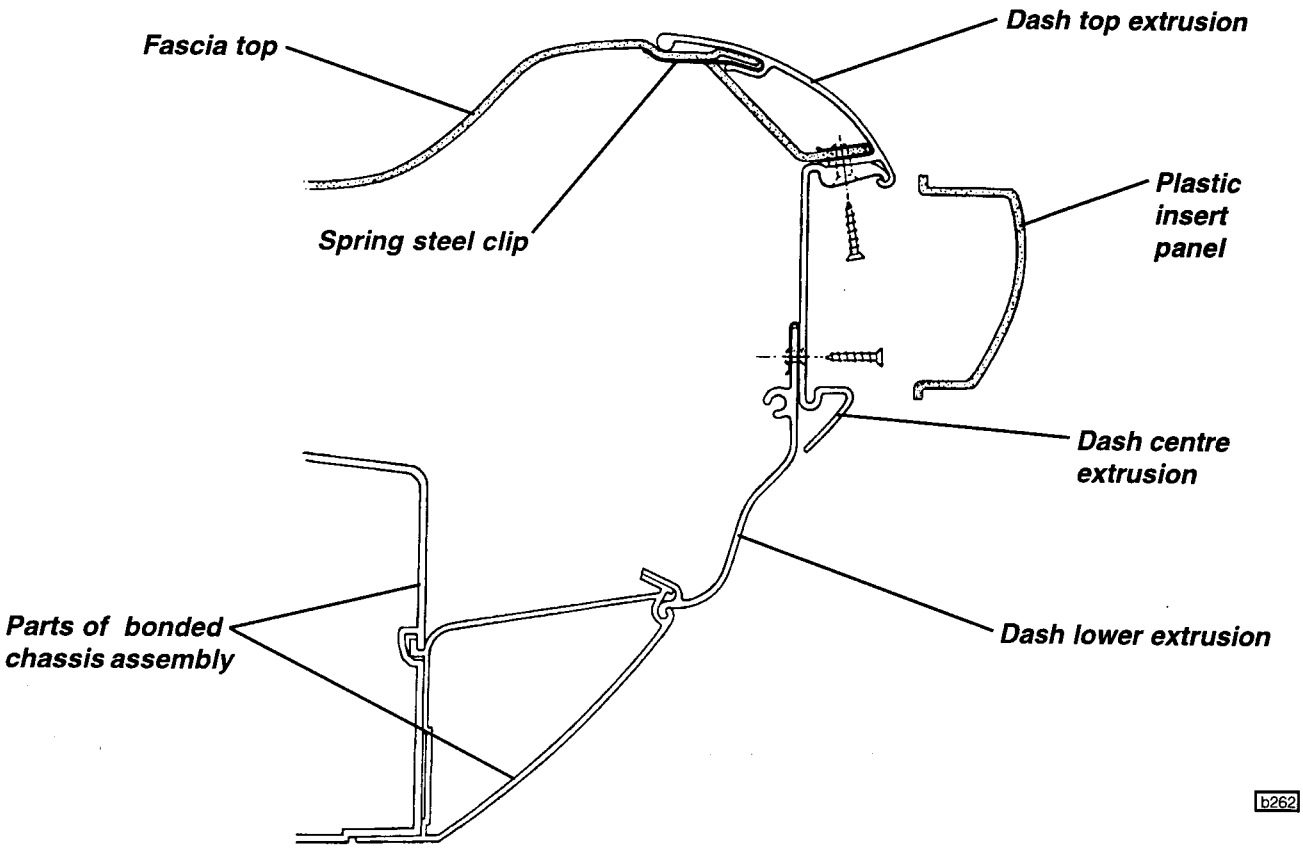

5. Release the heater controls (and audio set if fitted) from the dash centre panel, and remove the four screws securing the panel to the dash lower panel (two screws outboard of column). If necessary, depress the retaining tabs on the push switches to remove the switches from the outboard centre panel.

6. Before removing the lower panel, remove the coin tray at the bottom of each outer end of the panel, by carefully peeling away from its double sided tape and withdrawing from the 'A' post and sill top apertures. Note that a bead of Silastic is used along the panel lower edge to inhibit rattles.

7. The fascia end finishers are are secured to the fascia top with 'Rokut' rivets.

8. Reassemble the dash components in reverse order to removal.

BN.13 - WINDSCREEN

The laminated windscreen is bonded to the composite frame using Betaseal flexible polyurethane adhesive, and uses a rubber finisher strip around its top and side edges. Removal of the screen requires that the adhesive is cut using a suitable specialist tool, with access to the screen lower edge available only after the rear end of the front clamshell has been released.

To Replace Windscreen

Parts required:

Windscreen.
Finisher strip, windscreen edging.
Betaseal Kit.
Plinth, interior mirror mounting.
Loctite 7649 activator and Loctite 326 adhesive.

1. Remove the wiper arm from its spindle, and the interior mirror from its plinth.

2. In order to allow access to the lower edge of the screen, the rear of the front clamshell must be released:
   - At each side, release the rear end of the wheelarch liner and remove the screw securing the clamshell to the front end of the sill.
   - At each side, release the screw securing the bottom rear corner of the clamshell to the sill.
   - At each side, release the screw securing the top rear corner of the clamshell at the base of the windscreen pillar.
   - Release the four fixings in the clamshell bonnet aperture gutter.

3. Apply suction handles to the screen before using a pneumatic cutting knife such as Chicago Pneumatic's CP 838 Pneu-Nife, to cut the windscreen adhesive bead around the entire periphery of the screen. Lift out the screen.

Cutting out screen using pneumatic tool

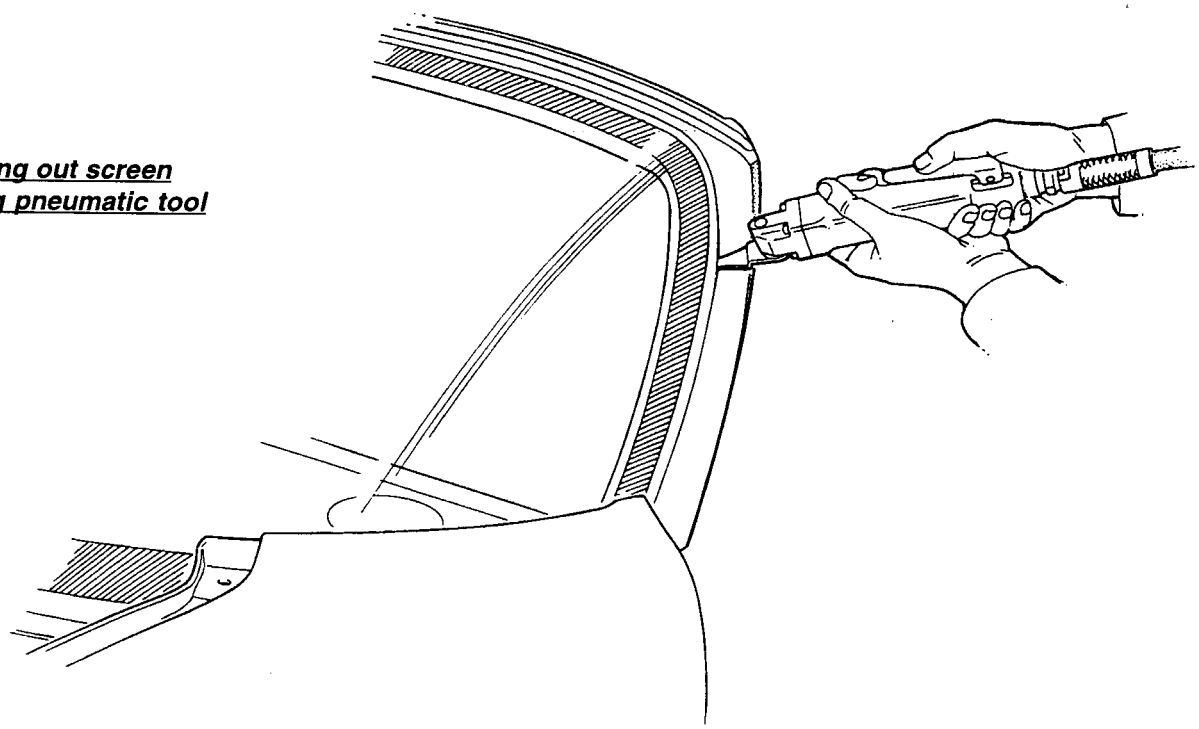

b269

4. Remove old adhesive from the windscreen frame sufficiently to leave a consistent and flat surface for the new bond.

5. Lay the new windscreen (suitably supported) on a protected surface, inside uppermost, and clean the whole of the inside of the windscreen with a 50% solution of water and isopropanol. Allow to dry.

6. Fit the interior mirror plinth to the inside of the windscreen:
The plinth is supplied as part of a kit which includes adhesive 'Penloc GZH' **WARNING: Contains trichloroethanes and acrylic acid derivatives. Refer to precautions on product packaging.**
- Thoroughly clean bonding face of mirror plinth and corresponding area on inside surface of windscreen using steel wool.
- Bend and crack the primer vial to allow the primer to saturate the felt tip. Apply the primer to the bonding surface on both the plinth and windscreen. Allow five minutes for the primer to dry.
- Apply a thin coat of adhesive to the bonding surface of the mirror plinth. Position the plinth on the windscreen with the dimple lowermost, and hold in place for 2 to 3 minutes. Allow at least 10 minutes curing time before fitting the mirror.

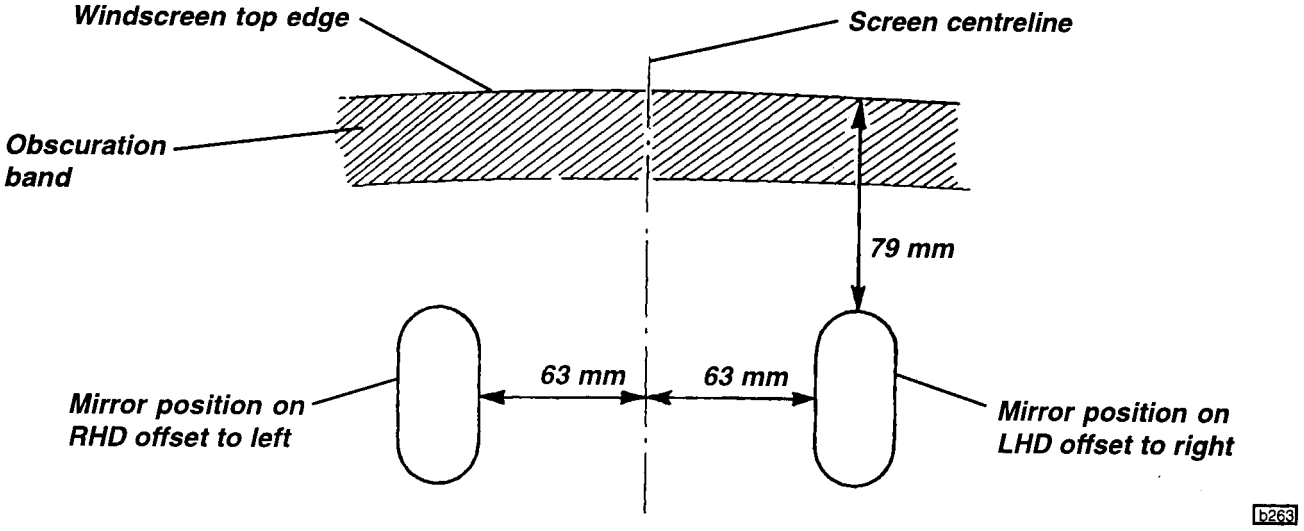

7. Clean the whole of the inside surface of the obscuration band, and the laminated edge of the glass with the wipe cleaner. Similarly clean the whole of the bonding surface on the windscreen frame.

8. Fit the rubber edge finisher around the top and sides of the windscreen, with a 30 mm overhang at each end.

9. Apply a 25 mm wide band of Betaprime around the outside of the glass. Similarly apply to the whole of the bonding surface on the windscreen frame, and to the windscreen bottom laminated edge. Allow to dry for a minimum of 5 minutes. If the screen is not fitted within 48 hours, the primer should be re-applied.

10. Cut the nozzle of the Betaseal cartridge to the dimensions shown to produce a triangular section bead. Holding the cartridge vertically, extrude a bead of adhesive around the screen, using the edge of the rubber finisher strip as a guide along the top and sides, and following the centreline of the primer band along the lower section.

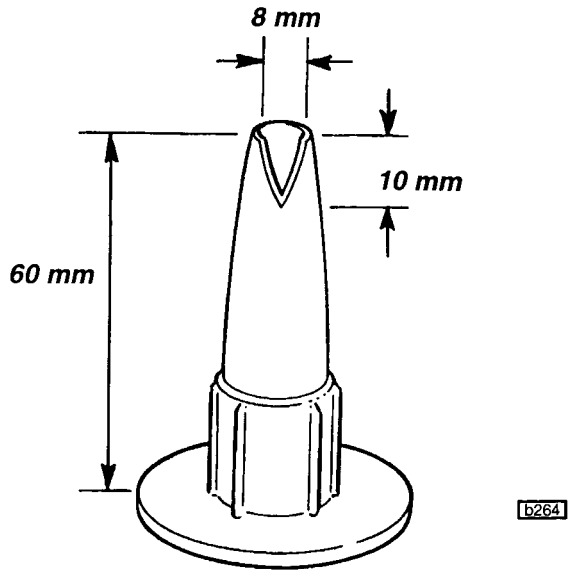

11. Cut three 4 mm spacer blocks from the material supplied, and position in the inside edge of the adhesive bead running along the bottom of the glass. These spacers are used to control the fitted height of the glass, and the wiper arm clearance.

12. Using suction handles, carefully lower the windscreen onto the frame, with the edge finisher firmly butted against the top and sides of the frame recess. Press the bottom of the screen until contact is felt with the spacer blocks, and press around the top and sides of the glass to ensure a similar compression of the adhesive bead. Carefully examine the integrity of the whole length of the joint, if necessary using a spatula to force extra adhesive into any suspect areas. Wipe off any excess adhesive extruded from the joint, or alternatively, allow the adhesive to fully cure and cut away any excess using a scalpel blade.

13. Use duct tape and/or support blocks to hold the screen in position and do not disturb until the Betaseal is fully cured. This will take approximately 4 hours dependent on atmospheric conditions, with a longer period required in dry atmospheres.

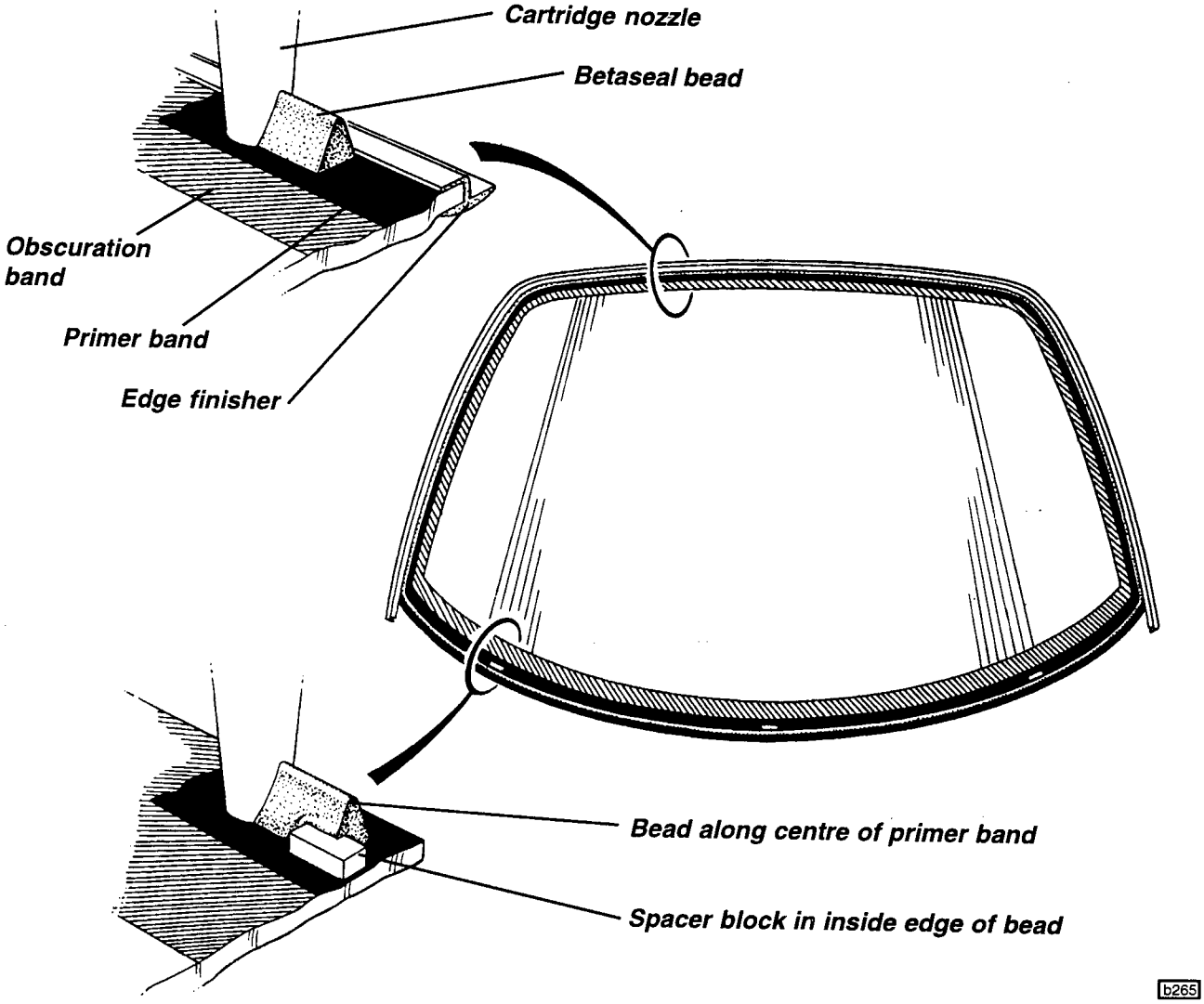

14. Remove the tape and refit the wiper arm and interior mirror.

Spillage of material

a) Any spillage of Betaseal onto unprimed glass can be readily peeled off after it has cured.
b) Any spillage onto the body can be removed with either Wipe Cleaner No.4, or white spirit.

Shelf life

a) Betaseal primer has a useful life of only about 24 hrs after it has been exposed to the air, after which it starts to become spongy. If the material is spongy, DO NOT USE. Always use glass primer immediately on opening, and replace the lid after use.

b) Betaseal has a shelf life of over 6 months at ambient temperature in the original unopened package.

BN.14 - ROOF HEADER RETAINING STRIP

To retain the front of the soft top roof, an aluminium tongue strip is fixed to the top of the windscreen header rail via a moulded plastic carrier. A textured gripper strip is applied to the top of the tongue to help stabilise the soft top and to cover the tongue fixings, and a small 'D' section seal is glued to the header rail ahead of the tongue carrier. The following procedure describes the fitting of new tongues and carriers to a new windscreen frame to which the door weatherstrip has already been fitted. A similar procedure will also apply to the refitting of dismantled components.

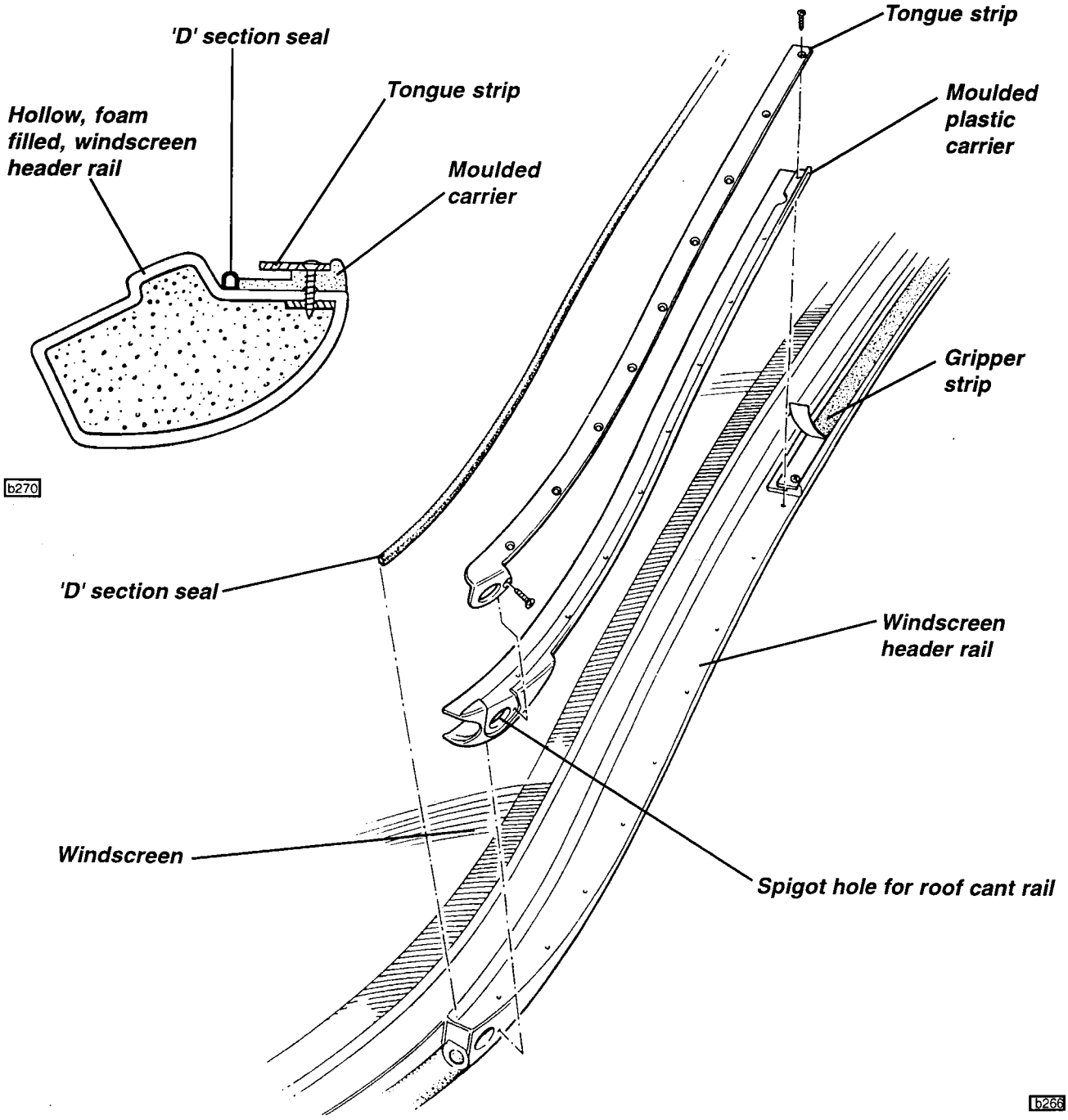

1. Dry fit the RH moulded carrier and alloy tongue strip, using a 12 mm diameter dowel in the cant rail spigot hole, and aligning the rear edge of the carrier with the header rail edge. Drill a 2.4 mm diameter pilot hole at the fixing point by the cant rail location, and at four of the header rail fixing points, drilling through the carrier and into the header rail. Retain by temporarily fitting the screws at these points.

2. Dry fit the LH carrier and tongue strip, and cut the two parts to abut neatly with the RH halves. Drill pilot holes for the LH parts and retain with four screws as for the RH side.

3. Remove the carrier and tongue strip fixings and trim the top of each door weatherstrip to fit in the recess in the tongue carrier. Bond the weatherstrip to the carrier using Loctite 480 adhesive.

4. Release the screws securing both tongue strips and carriers and clean the mating surfaces of the tongue carriers and header rail with Betaclean. Apply a thin bead of black Silastic to the underside of the carriers and fit the carriers and tongue plates, drilling the remaining pilot holes and retaining with the screws. Seal the top end of the door weatherstrip to the the header rail with a small bead of Silastic.

5. Clean the top surfaces of the tongue strips with Betaclean before applying the self adhesive gripper tape. Trim the ends of the tape to match the profile of the carrier moulding.

6. Fit the 'D' section header rail seal, abutting the front edge of the carrier moulding.

BN.15 - DECAL POSITIONING

Self adhesive decals are used on the rear transom, and on the dash. Before fitting a decal, the surface must be degreased with an acetone cleaner, and allowed fully to dry.

Rear Transom

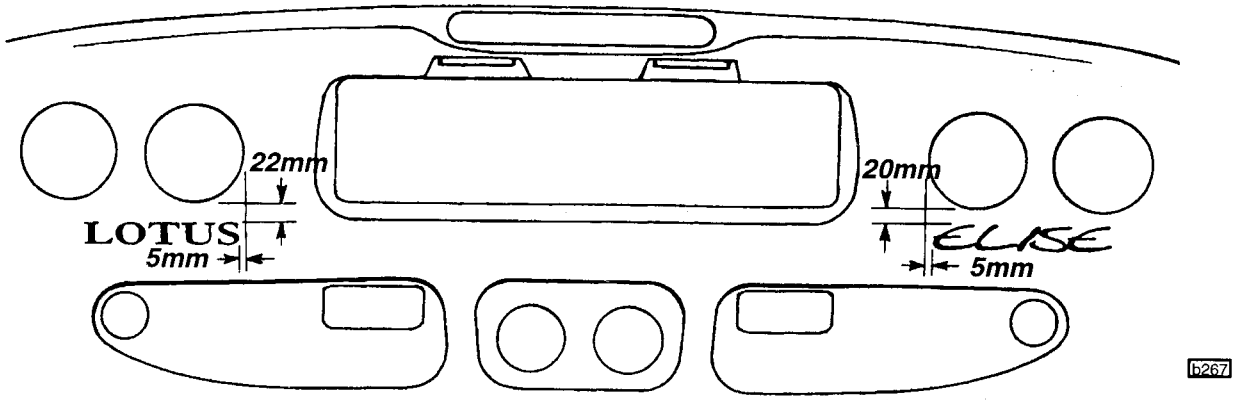

Dash Panel

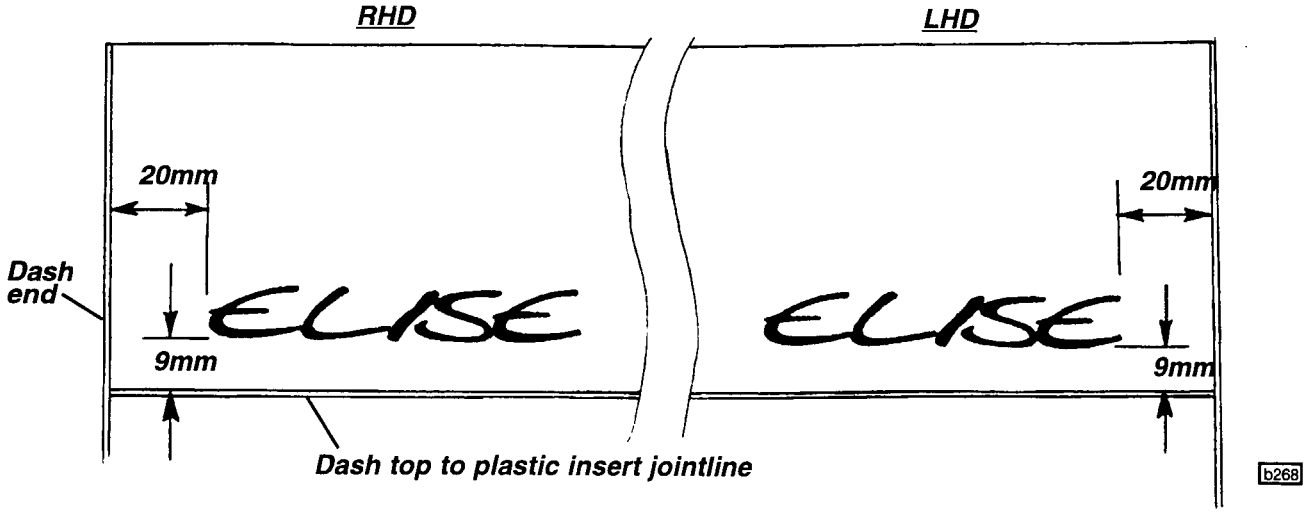

BN.16 - REAR BOOT BULKHEAD

To create a protective wall and to provide a mounting for the optional rear boot bag and lid, an alloy bulkhead is fitted between the engine and the rear luggage compartment. A bulkhead may be fitted to a car built without one, without removing the rear clamshell as follows:

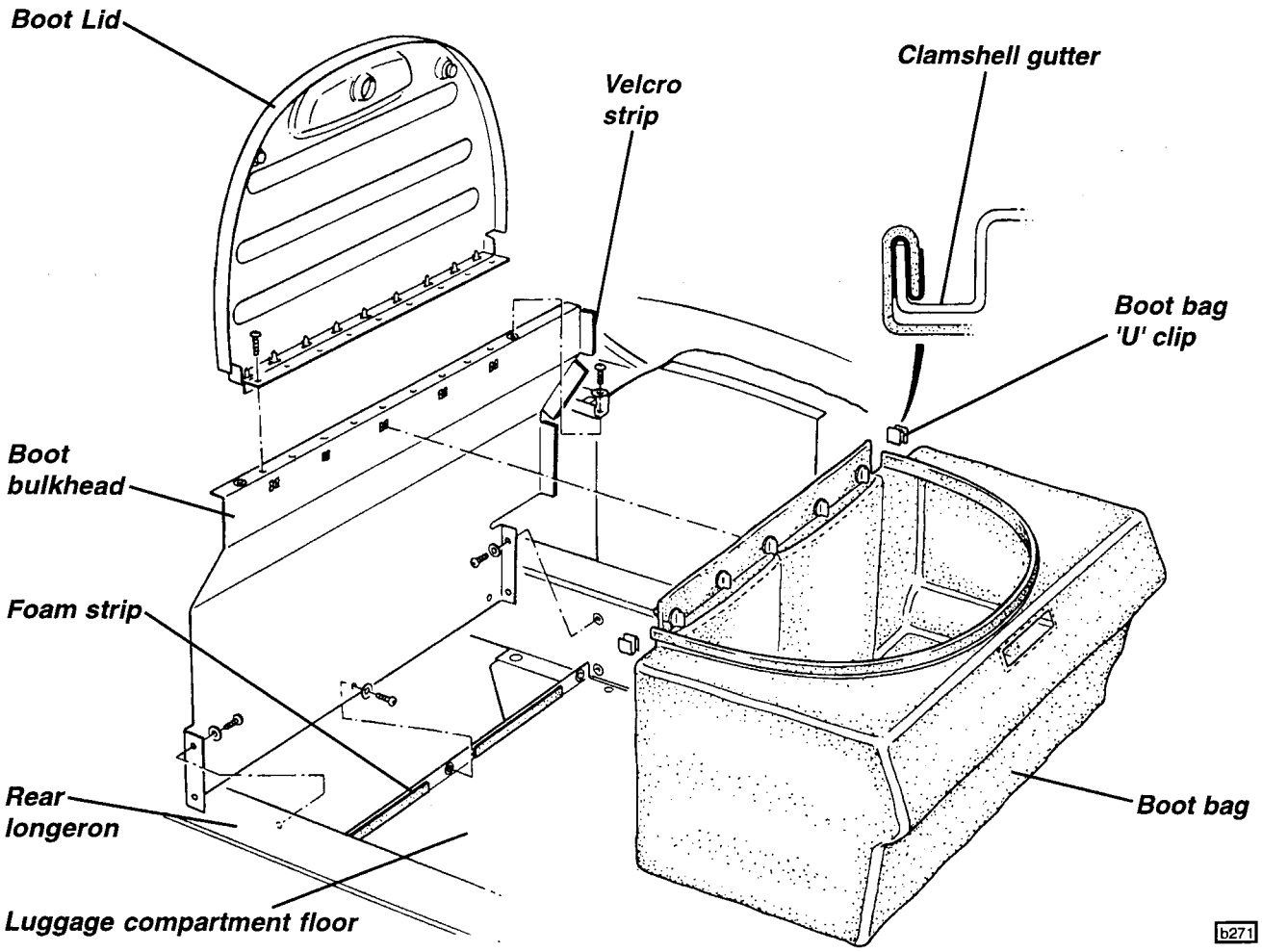

1. In order to inhibit rattles, stick a length of foam rubber strip between the fixing points on the turned up edge of the rear floor.

2. Manoeuvre the bulkhead into position and mark the RH flange of the bulkhead against the clamshell sidewall. Stick three lengths of 'Velcro' to the RH side flange of the bulkhead and corresponding area on the sidewall, and secure the bulkhead into position with three screws along the bottom edge into thread inserts in the floor front edge, and two screws each side into the rear longerons. Fit a single screw through the rear lid gutter into each top end of the bulkhead.

3. Fit the boot lid to the top surface of the bulkhead using 9 fasteners.

4. Fit the boot bag by securing with 5 turnbuckle fasteners to the bulkhead, and hook the rim of the bag onto the clamshell gutter flange. Use a spring steel 'U' clip to retain each front end of the rim.

FRONT SUSPENSION

SECTION CG - M111 ELISE

	Sub-Section	Page
General Description	CG.1	3
Geometry & Adjustments	CG.2	3
Anti-Roll Bar	CG.3	6
Suspension Disassembly/Assembly	CG.4	8
Front Wheel Bearings	CG.5	10

GENERAL LAYOUT

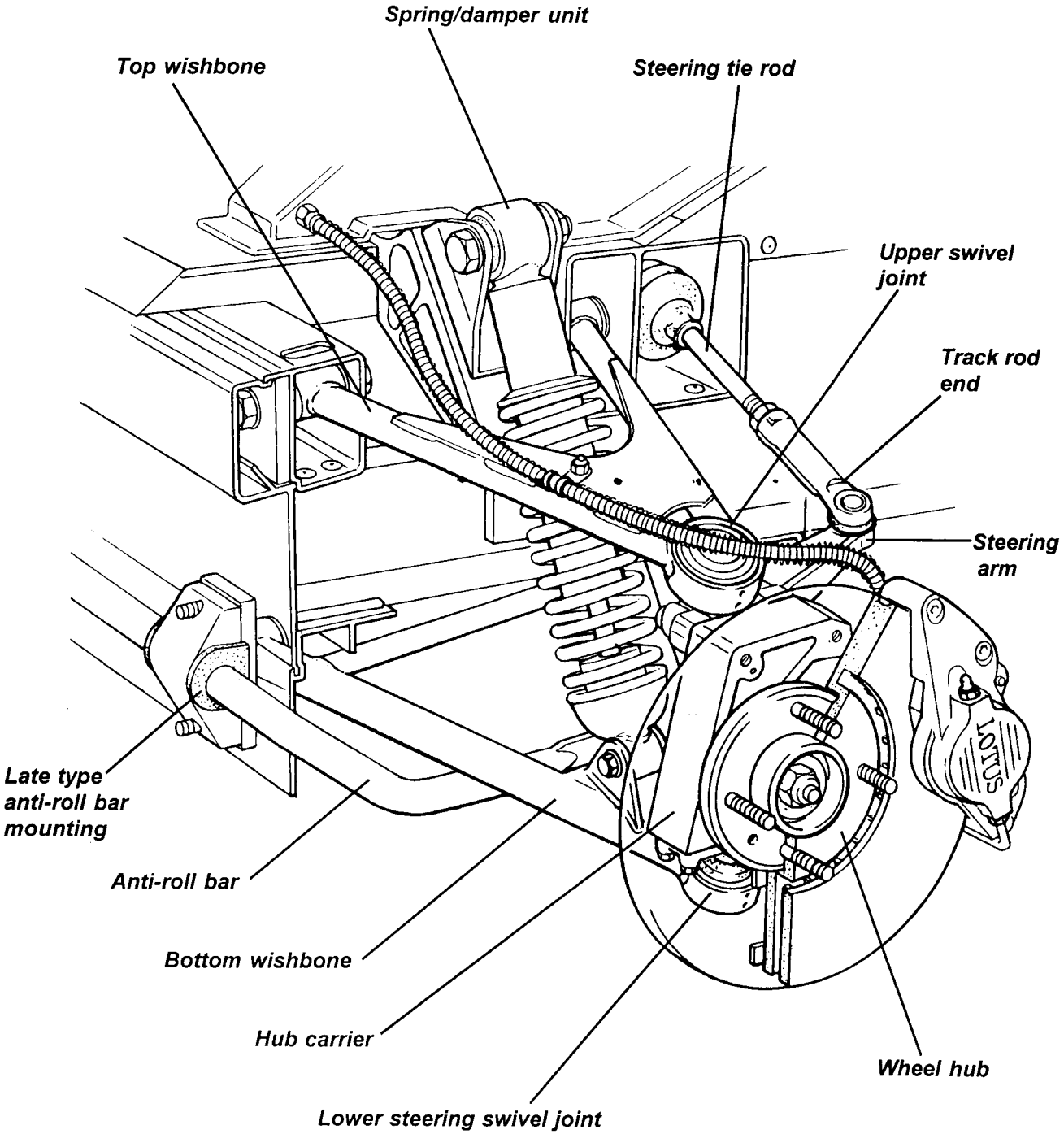

c34

CG.1 - GENERAL DESCRIPTION

The fully independent front suspension comprises, on each side of the car, upper and lower, fabricated tubular steel wishbones, with a concentric coil spring/telescopic damper unit picking up on the outboard end of the lower wishbone. An extruded aluminium alloy hub carrier, houses a dual taper roller bearing which supports a steel hub equipped with 4 wheel studs. A forward mounted tubular steel anti-roll bar, is supported in chassis mounted pivot bushes and is operated via short ball jointed drop links from the lower wishbones.

The inboard ends of both wishbones use replaceable bonded rubber pivot bushes to provide maintenance free articulation, with a specification providing accurate and responsive dynamic characteristics. Both upper and lower steering swivel ball joints are pressed into housings incorporated into the outer ends of the upper and lower wishbones. The upper ball pin is secured to the forged steel, rearward facing steering arm, itself fixed to the hub carrier by two M10 bolts. The ball pin of the steering lower swivel joint is secured in a forged steel plinth bolted to the bottom of the hub carrier by four M10 setscrews. The spring/damper unit acts between the outer end of the lower wishbone and the chassis front crossmember, and is fitted with the damper rod lowermost in order to minimise unsprung weight.

In order to protect the alloy hub carrier from the effects of electrolytic corrosion, it is important to ensure that the joint faces with any steel components are coated with the specified jointing compound before assembly.

CG.2 - GEOMETRY & ADJUSTMENTS

Provision is made for the adjustment of wheel alignment, camber and castor. Under normal service conditions, no periodic scheduled check of the geometry is necessary, although a front wheel alignment check is recommended when the front tyres are replaced. A full geometry check is required only after front suspension repair, or if excessive tyre wear is evident, or if steering difficulties are encountered. Before any measurements or adjustments are made it is essential first to set the vehicle to its 'mid-laden' ride height, approximating to driver and passenger and a half tank of fuel:

Ride height (for geometry check)	- front	140 mm below front end of chassis siderail
	- rear	140 mm below rear end of chassis siderail
Alignment		0.2 mm toe-out overall; - 0, + 0.2 mm
		(0.03° toe-out overall; - 0, + 0.03°)
Camber		- 0.1°; + 0.1°, - 0.2°. Max side/side 0.2°
Castor		+ 3.8°; ± 0.2°. Max side/side 0.2°
Steering axis inclination		12° nominal

Alignment

Wheel alignment refers to the parallelism of the wheels when viewed from above and is crucial to vehicle stability, handling and tyre wear.

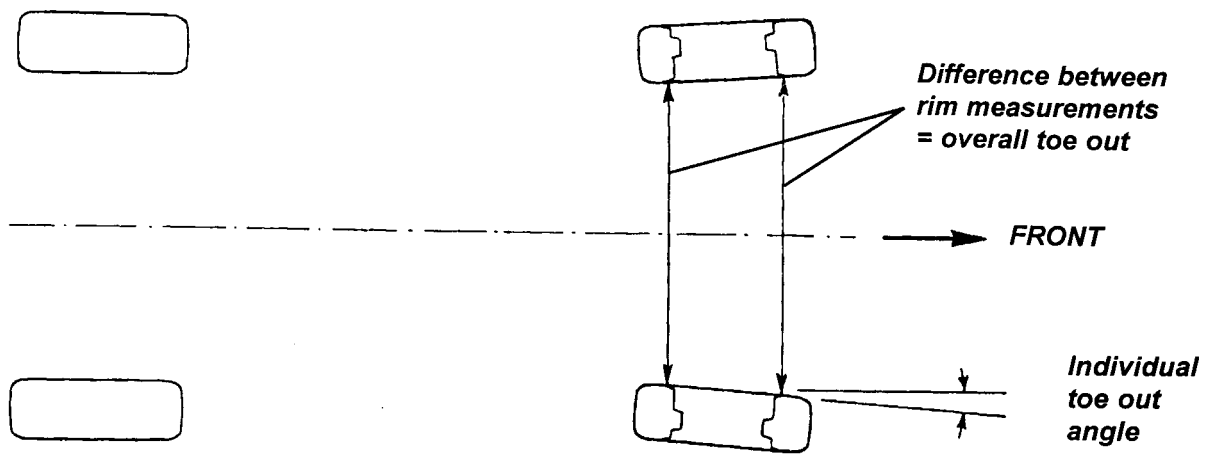

c26

Alignment is measured either by the angle a wheel makes with the vehicle centre line, or the difference in dimension between the wheel rim to wheel rim measurement at the front and rear of the wheel at hub centre height. The wheels are said to 'toe-in' when the wheel paths converge ahead of the vehicle, and 'toe-out' when they diverge. Wheel alignment is designed to vary with both steering angle (Ackerman) and suspension travel (bump steer) and should be measured only 'straight ahead' at the specified ride height.

Front wheel alignment is adjusted be screwing the track rods into or out of the track rod outer end ball joints. In order to preserve the required bump steer characteristic and steering symmetry, the effective length of each track rod must remain equal - adjust each track rod by a similar amount.

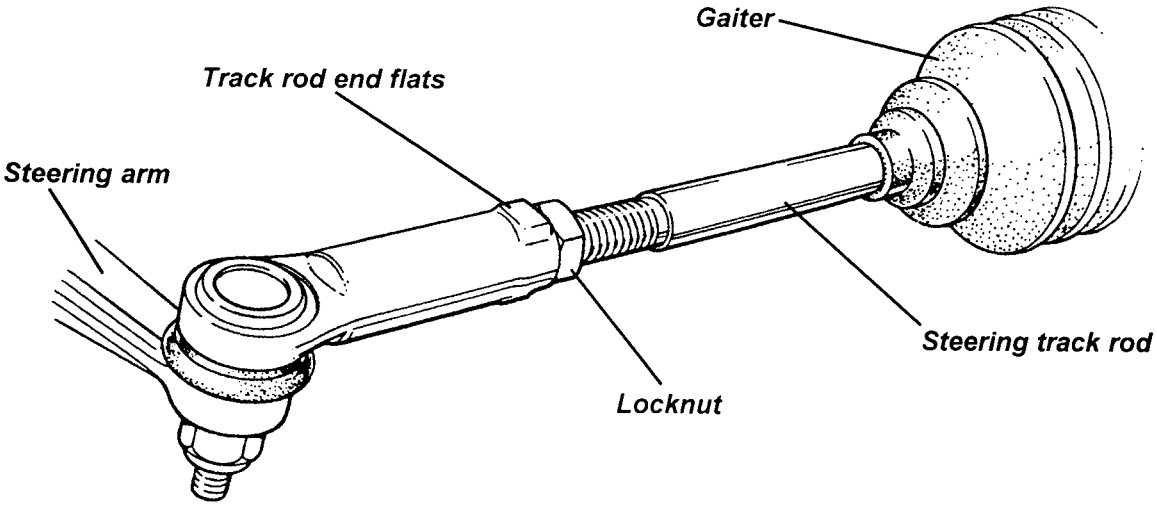

c28

- Hold the track rod end using the flats provided, and slacken the locknut. Repeat for the opposite side.
- Turn each track rod a similar amount. As a guide, turning both track rods by one quarter of a turn will alter overall toe-out by approx. 2.0 mm.
- When adjustment is correct, hold each track rod end and tighten the locknuts to 80 - 82 Nm (58 - 60 lbf.ft).

When slackening or tightening the track rod end locknuts, it is important that the torque reaction is resisted using the track rod end flats, and that the ball joint itself is not allowed to be stressed.

Camber Adjustment

Camber is the angle from vertical of the wheel when viewed from the front, and is said to be negative when the wheel leans inwards at the top (positive when leaning outwards). The primary purpose of camber is to achieve the maximum efficiency of the tyre under cornering loads and body roll, with the specification closely allied to a particular wheel/tyre combination. The camber angle changes with suspension travel, becoming more negative on bump, and should be measured only at the specified ride height. Incorrect camber can result in handling deficiencies and excessive tyre wear.

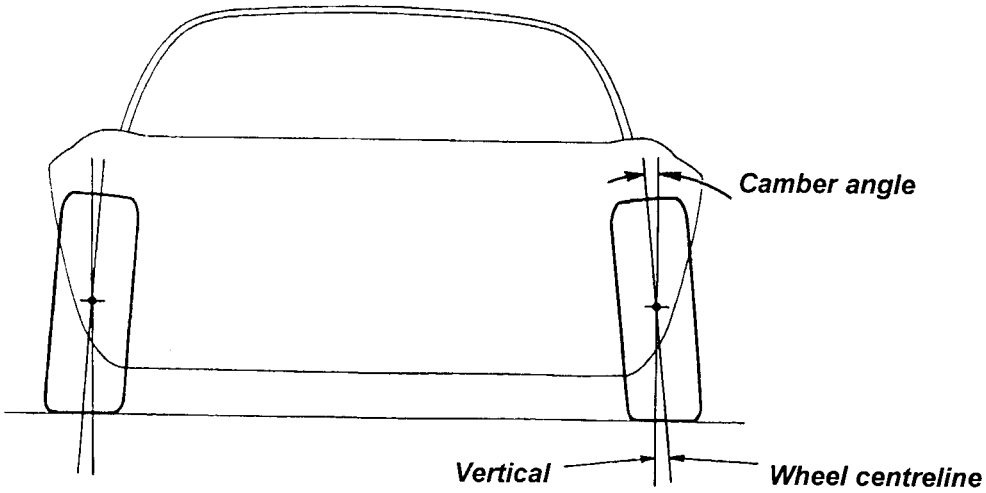

c29

The early type uses a split Nylon bush secured to the chassis via the lower wishbone front pivot bolt and spacer tube, with a secondary M5 bolt clamping the two halves of the bush below the bar. Washers welded to the anti-roll bar bear against the outer sides of the bushes to locate the bar laterally. The bush should be lubricated on assembly with MoS_2 type grease.

Excessive radial clearance between the bar and bush may cause knocking noises, which can be reduced by removing material from the joint face of the split bush to reduce the effective diameter.

Lower Wishbone Inboard Pivots & Early Type Anti-Roll Bar Mounting

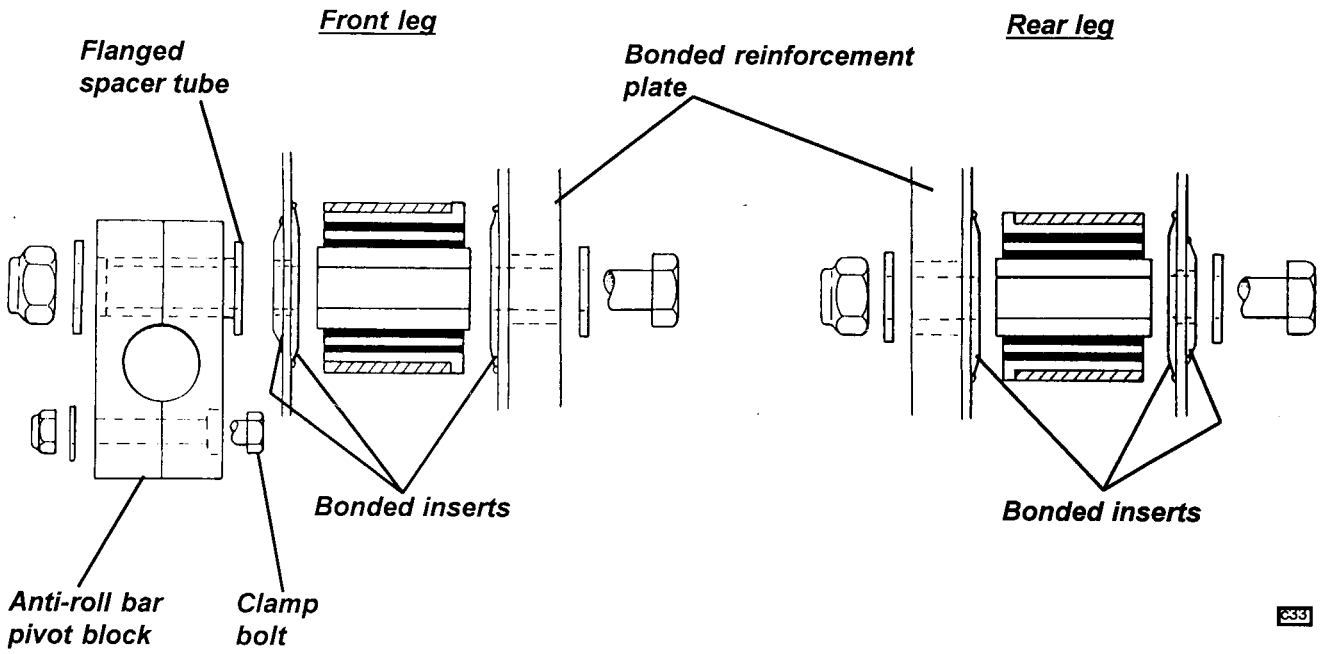

Anti-Roll Bar Drop Link

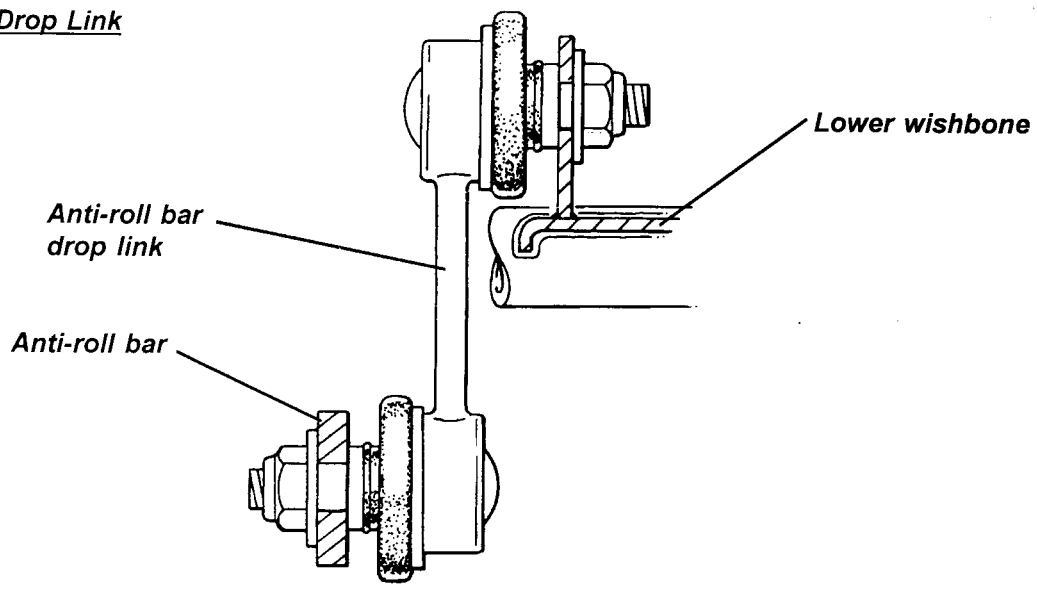

Cars built from VIN W 3039 (March '98) use bonded rubber type pivot bushes and alloy clamp brackets to secure the re-shaped anti-roll bar to the chassis front face. Washers welded to the bar bear against the inner sides of the bushes to provide lateral location. Castrol LMX rubber grease, or equivalent, should be used when fitting the rubber bushes onto the anti-roll bar.

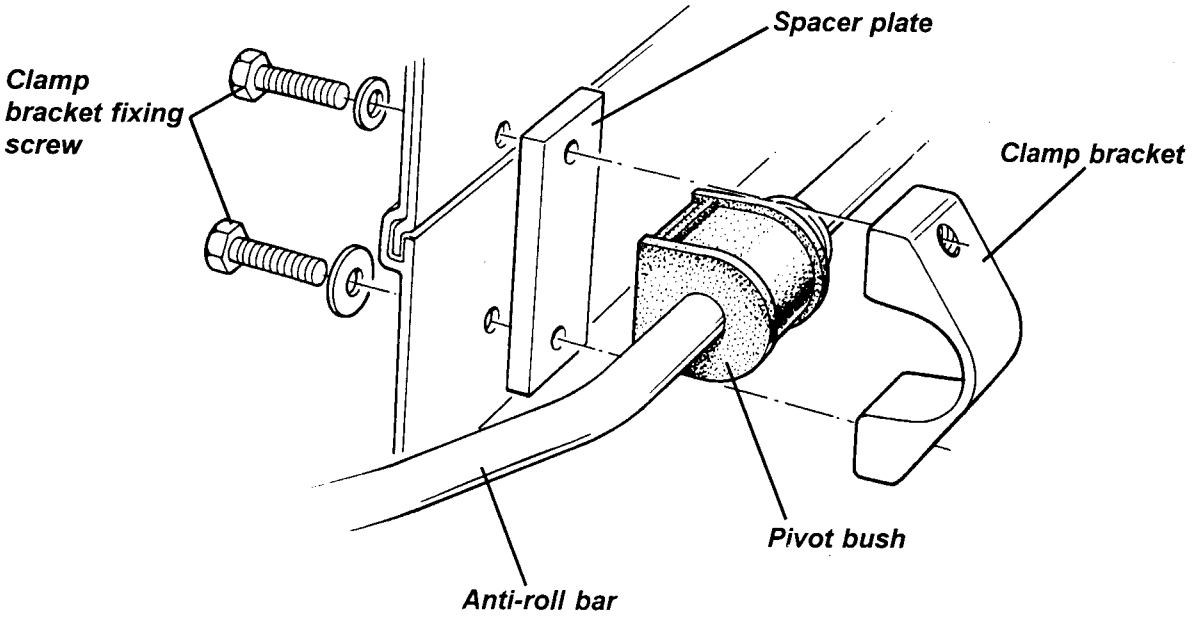

It is possible to update an early car to the later specification by drilling the chassis front face to accept the new clamp brackets, and substituting the new parts, including the reshaped anti-roll bar. Fettling of the crash structure will also be required to provide clearance for the higher mounting position of the new bar. Note that smaller washers are used on the clamp bracket upper fixing bolts in order to clear the joint ridge in the chassis extrusion.

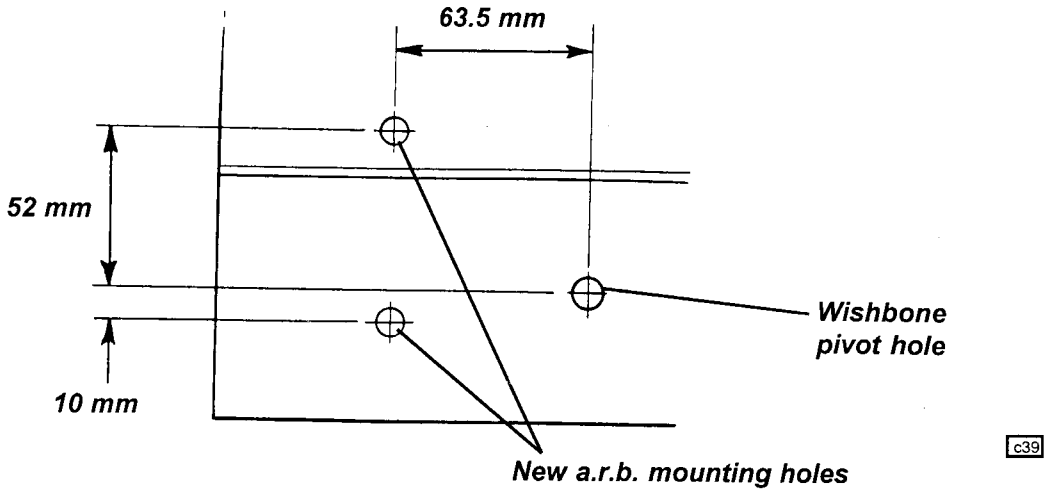

CG.4 - SUSPENSION DISASSEMBLY/ASSEMBLY

The suspension may be disassembled without the use of any special tools other than a spring compressor if the spring is to be removed from the damper unit. With the car on a wheel free lift and with the front wheels removed:

1. Remove the wheelarch liner and the undertray between the lower front edge of the chassis and the front clamshell.

2. Remove the two bolts securing the brake caliper to the hub carrier, release the flexible hose from the top wishbone, and support the caliper aside without straining the brake hose. Remove the brake disc.

3. Remove the nut securing the track rod end into the steering arm, and use a ball joint splitter to separate the rod end from the arm.

4. Remove the nut securing the top swivel joint to the steering arm, and use a ball joint splitter to separate the joint from the arm. Remove the two M10 fixing bolts and remove the steering arm from the hub carrier, taking care not to misplace the camber adjustment shim plates.

5. Remove the four M10 setscrews securing the lower swivel joint plinth to the hub carrier, and withdraw the hub carrier and hub assembly.

6. If necessary, remove the nut securing the lower swivel joint to the plinth, and use a ball joint splitter to separate the forged steel plinth from the joint.

7. Remove the bolts securing the spring/damper unit to the lower wishbone and chassis anchor bracket, and withdraw the unit, noting the spacer washers fitted at the top end.

8. Disconnect the anti-roll bar drop link from the lower wishbone, and remove the lower wishbone front pivot bolt. Withdraw the anti-roll bar with its mounting blocks.

9. Remove the lower wishbone rear pivot bolt from within the footwell, and withdraw the wishbone.

10. Before removing the two pivot bolts for the top wishbone, take careful note of the distribution of castor adjustment washers. Move the steering rack to full lock to provide clearance for the withdrawal of the wishbone rear pivot bolt. Withdraw the wishbone.

11. The wishbone pivot bushes comprise a rubber bush bonded to a steel inner sleeve and a flanged plastic outer sleeve. The bushes may be pressed out of the wishbone eyes, and new bushes fitted using suitable press tool dollies. Smear the outer surface of the new bush with IPC 'P-80' rubber lubricant emulsion (A082C6042V) to ease fitment, and assemble as follows:
Top wishbone - insert from the outside of both pivot eyes (from front of front eye, and rear of rear eye).
Lower wishbone - insert from the inside of both pivot eyes (from rear of front eye, and front of rear eye).
Note that the top wishbone rear bush was originally common with all other front wishbone pivot bushes, but was changed during '98 to a non-interleaved bush identified by a blue paint mark.

12. Top and bottom swivel joints are identical, and may be replaced if necessary using a suitable press.

13. The road spring may be removed from the damper using a suitable spring compressor to allow the spring collar retaining circlip to be released from its damper body groove. Note that the springs were changed in June '98 from parallel (black) to barrel shaped (graphite) for improved spring stability. For parallel springs, the lowermost spring abutment circlip groove is used (highest ride height), whereas the barrel shaped springs use the top groove. See also sub-section DE.7.

14. Re-assemble the suspension in reverse order to disassembly with the following notes:
- Take care to assemble each pivot bolt with the correct washers/snubbers/spacers as shown in the diagrams.
- On the early type anti-roll bar mountings, ensure that each mounting block is fitted with a flanged steel sleeve from the rear end, before inserting the lower wishbone pivot bolt.
- Smear the shank of each pivot bolt with PBC grease.
- Apply Permabond A131 (A912E7034) to the threads of any bolts tapping into an alloy extrusion.
- Note that the lower swivel joint plinth is handed, but can only be fitted to the hub carrier in its correct hand and orientation. Tighten the ball pin into the plinth before fitting the plinth to the hub carrier.
- Coat the joint faces of the hub carrier with the lower swivel joint plinth and with the steering arm, with Duralac MSDS anti-corrosive jointing compound (A111C6017), and assemble whilst the compound is still tacky.

- Take care to refit the original camber adjustment shimpack, and distribute the shims as noted on removal.
- Lubricate the ends of the damper top eye bush with rubber grease.
- Press the brake pedal to reposition the pads before driving the car.

15. The Service Schedule specifies that the security of the front and rear suspension is checked at each service. This operation requires that all the principal suspension pivot bolts are torque checked, noting the following points:
Where a bolt is tapped into a housing or weldnut, and relies on a thread locking compound for security, it is important to appreciate that if the bolt is disturbed, the locking compound must be re-applied. The following procedure should be adopted for all such fixings:
- Check the torque of the fixing.
- If the specified torque is attained without the fixing being disturbed (moving), take no further action.
- If the bolt moves, the locking action of the thread adhesive will have been lost. Remove the bolt completely, clean off all old adhesive using a wire brush and acetone, and apply new adhesive as specified.
- Refit the bolt and tighten to the specified torque.
- If for any reason a bolt is found to have become loose, and the car has been operated for any period in this condition, the bolt should be renewed as a standard precaution and related components carefully inspected for hole ovality or wear.

Torque Settings:	Nm
- Upper and lower wishbone pivot bolts	45
- Upper swivel joint to steering arm	55
- Lower swivel joint to plinth	55
- Lower swivel joint plinth to hub carrier	45
- Steering arm to hub carrier	45
- Track rod end to steering arm	30
- Damper to lower wishbone	45
- Damper to chassis	45
- Brake caliper to hub carrier	45
- Anti-roll bar rubber bush mounting clamps	20
- Anti-roll bar drop links	45

CG.5 - FRONT WHEEL BEARINGS

A sealed dual taper roller bearing with a split inner race, is retained in each front hub by two circlips. The hub is pressed into the bearing, and retained by a clamp bolt which also applies the necessary preload to the bearing assembly. Check for any discernible free play in the hub bearing and for any signs of lubricant expulsion, indicative of seal failure. If free play is evident, or any roughness or tight spots can be felt, the bearing should be replaced - there is no provision for adjustment. Note that removal of the front hub will normally result in separation of the hub bearing inner race, necessitating renewal of the bearing.

Front Hub M16 Clamp Bolt Set

Standard cars used a front hub M12 clamp bolt set until Sept.1997 (approx. VIN W 1830), at which time the competition type M16 clamp bolt set was commonised to all cars. If an early car is to be used in a competition environment with the associated high level of chassis loading, it is recommended that the front hub bearing M12 clamp bolts be replaced by M16 clamp bolt sets including thrust washers, which allow a substantial increase in the clamping force applied to the inner bearing races. Updating to the later specification is also recommended if the front hubs are to be removed for any reason.

Description	*Part no.*	*Qty*
Front Hub Clamp Bolt Set	A111C0137S	1
comprising:		
Bolt, M16 x 100, bearing clamp	A111W2185F	2
Nut, M16 Nyloc, bearing clamp bolt	A111W3159F	2
Thrust Washer, outer	A111C0117F	2

Thrust Washer, inner	A111C0118F	2
Dust Shield, front wheel bearing	B111C0076F	2
Washer, M16x30x2	A111W4171F	2

The M16 clamp bolt set is a direct replacement for the M12 set, and it is recommended that at the time of fitting, the hub is removed from the bearing and the condition of the hub spigot carefully examined. If any signs of bearing inner race movement on the hub are evident, the hub and bearing should be renewed and assembled with the new bolt set.

To Replace Wheel Bearing

1. Release the two fixing bolts, and remove the brake caliper from the hub carrier. Support clear of the brake disc without straining the flexible hose. Withdraw the brake disc from the hub.

2. Release the four fixing screws, and remove the lower swivel joint from the hub carrier.

3. Release the two bolts, and taking care to retain the camber adjustment shim plates, separate the steering arm from the hub carrier. Remove the hub carrier to a bench.

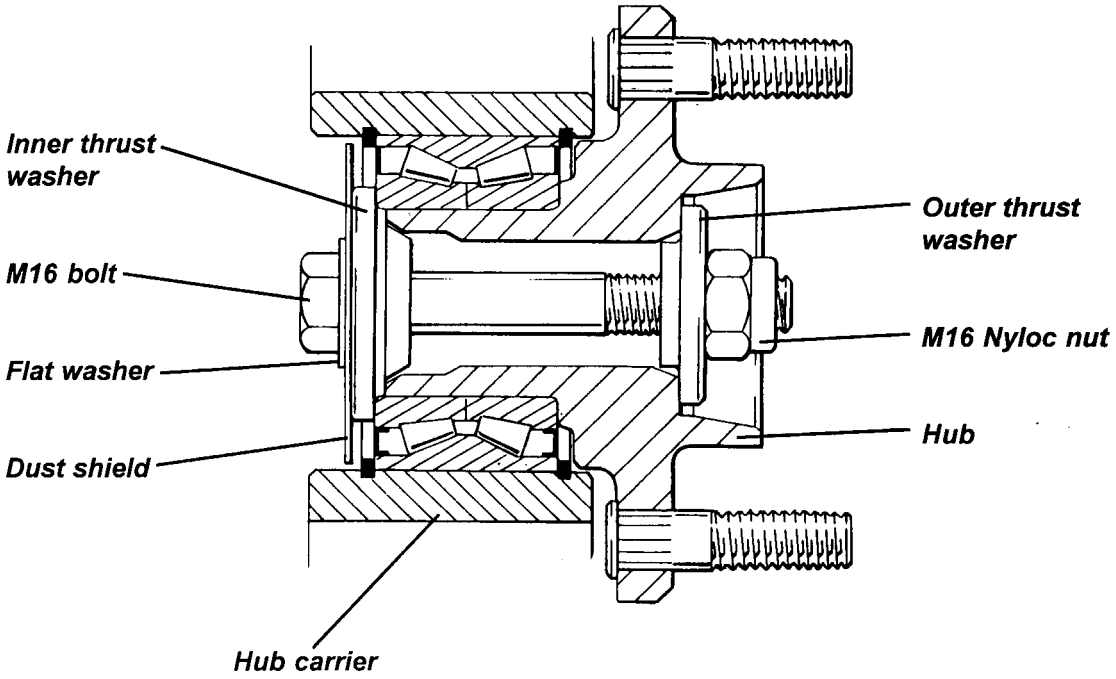

4. Remove the hub clamp bolt and washers, noting that **LH hub M12 bolts are LH thread** (M16 bolts are RH thread for both sides), and press the hub out of the bearing. If necessary, use a puller to remove the inner race from the hub spigot.

5. Remove both circlips from the hub carrier, and press out the bearing.

6. Before fitting the new bearing, clean any corrosion from the bearing bore outside of the circlip grooves, and fit one circlip into position. Heat the hub carrier in an oven to 90°C for at least 20 minutes before pressing the bearing assembly into the carrier to abut the fitted circlip. Retain by fitting the second circlip.

7. Supporting the inner bearing race, press the hub fully into the bearing. It is recommended to fit the M16 clamp bolt set, but if the original M12 bolt is to be re-fitted, fit the bolt from the outside inwards, with - **RH thread on RH side, LH thread on LH side.** M16 bolts are not handed, and should be fitted from the inside outwards with a plain washer and the bearing dust shield beneath the bolt head, as shown. The smaller of the two special stepped washers locates against the hub, and the larger against the bearing.

Tighten the hub clamp bolt/nut:
M12; 77 Nm
M16; 210 Nm

8. Re-assemble the suspension in reverse order to dis-assembly, referring also to sub-section CG.4. Pump the brake pedal to reposition the pads before driving the car.

REAR SUSPENSION

SECTION DE - M111 ELISE

	Sub-Section	Page
General Description	DE.1	3
Geometry & Adjustments	DE.2	3
Suspension Disassembly/Assembly	DE.3	5
Rear Toe-Link Fixings	DE.4	8
Rear Wheel Bearings	DE.5	10
Wheel Speed Sensor	DE.6	12
Barrel Shaped Road Springs	DE.7	12

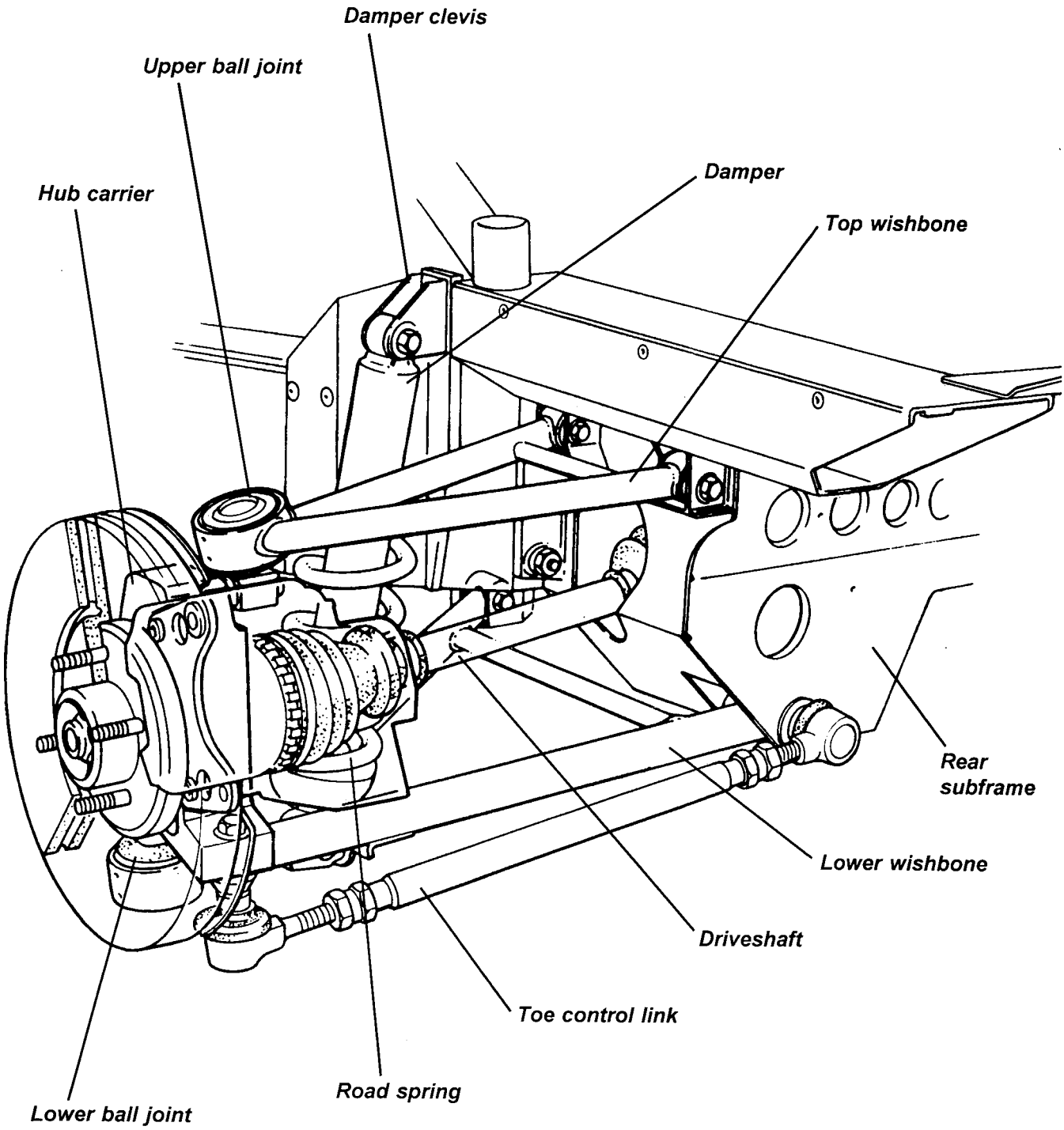
Damper clevis
Upper ball joint
Hub carrier
Damper
Top wishbone
Rear subframe
Lower wishbone
Driveshaft
Toe control link
Road spring
Lower ball joint

d20

DE.1 - GENERAL DESCRIPTION

The fully independent rear suspension comprises, on each side of the car, upper and lower tubular steel wishbones, a toe control link, and a concentric coil spring/telescopic damper unit picking up on the outboard end of the lower wishbone. An extruded aluminium alloy hub carrier, houses a dual taper roller bearing which supports the outboard driveshaft and a steel hub equipped with 4 wheel studs. Onto the LH hub carrier is mounted a wheel speed sensor which operates in conjunction with a sensor ring on the outboard driveshaft, in order to supply vehicle speed signal to the speedometer.

The inboard ends of the upper and lower wishbones use replaceable bonded rubber pivot bushes to provide maintenance free articulation and suppression of noise and vibration. The two legs of the rearward biased top wishbone, pick up on the chassis rear subframe, and converge outboard to a ball joint housing into which is pressed a ball swivel joint. The ball pin of this joint locates in a forged steel plinth which is itself secured to the hub carrier using two horizontally disposed M10 bolts. The braced, wide based, forward biased lower wishbone, is anchored at its front inboard end to the chassis rear crossmember via a steel bracket, and at its rear inboard end to the rear subframe. The outboard end of the wishbone houses another swivel ball joint fixed via a forged steel plinth (similar to that used on the front suspension) to the bottom of the hub carrier by four bolts.

The adjustable length, double ball jointed toe control link, shares a chassis anchorage with the rear of the lower wishbone, and picks up on a rearward extension of the hub carrier.

The spring/damper unit is fitted with the damper rod lowermost to minimise unsprung weight, and acts between the outer end of the lower wishbone and a steel clevis bracket bolted to the rear end of the chassis main side rail.

Certain components are common with the front suspension, and include: top and bottom swivel joints, hubs and hub bearings, and some wishbone pivot bushes.

DE.2 - GEOMETRY & ADJUSTMENTS

Provision is made for the adjustment of wheel alignment and camber. Under normal service conditions, no periodic scheduled check of the geometry is necessary, with a full geometry check required only after suspension repair, or if excessive tyre wear is evident, or handling deficiencies encountered. Before any measurements or adjustments are made, it is essential first to set the vehicle to its 'mid-laden' ride height, approximating to driver and passenger and a half tank of fuel:

Ride height (for geometry check);	- front	140 mm below front end of chassis siderail
	- rear	140 mm below rear end of chassis siderail
Alignment;		1.2 mm toe-in each side; + 0.2 mm, - 0.
		(0.18° toe-in each side; + 0.03°, - 0)
		Max. difference side/side; 0.2 mm (0.03°)
Camber;		- 1.8°; ± 0.2°. Max. difference side/side; 0.2°

Alignment

Wheel alignment refers to the parallelism of the wheels when viewed from above and is crucial to vehicle stability, handling and tyre wear. It is measured either by the angle a wheel makes with the vehicle centre line, or the difference in dimension between the wheel rim to wheel rim measurement at the front and rear of the wheel at hub centre height. The wheels are said to 'toe-in' when the wheel paths converge ahead of the vehicle, and 'toe-out' when they diverge. Rear wheel alignment should be measured only using equipment which measures **individual** rear wheel alignment reletive to the car centreline. Wheel alignment is designed to vary with suspension travel ('bump steer') and the base setting should be measured only at the specified mid laden ride height.

It is possible to accurately measure individual wheel alignment using a pair of long straight bars or round section elastic in conjunction with 4 axle stands or similar. Any bars used must be longer than the length of the car, and be suitably stiff and straight.

Set up the bars or elastic on each side of the car at wheel centre height as shown an the diagram, so that A = A, B = B and C = C.

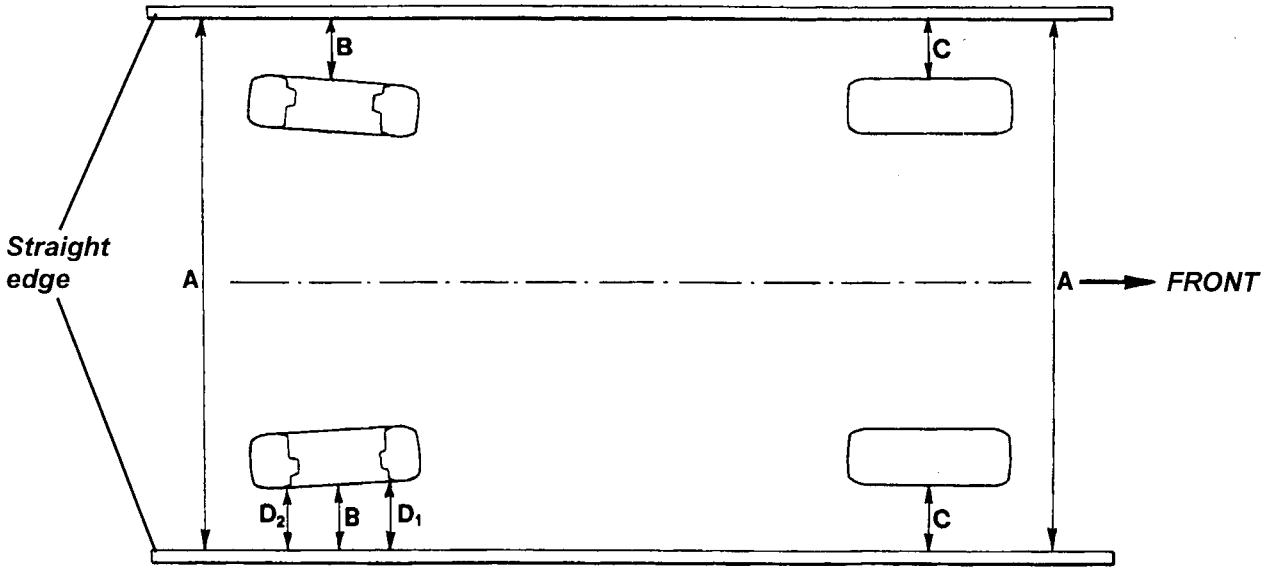

d21

Measure the distance from the bar to the rim of the wheel concerned at the front and rear of the centre line of the wheel (D_1, D_2). If the front dimension, D_1, is greater than the rear dimension, D_2, the wheel has TOE-IN. If the rear dimension is greater than the front dimension, the wheel has TOE-OUT. The difference between the two measurements is the amount the wheel has toe-in or toe-out.

Wheel alignment is adjusted via the toe control link which is equipped with a left hand threaded ball joint at one end, and a right hand threaded ball joint at the other. Slacken both ball joint locknuts, and turn the link rod as necessary to increase or decrease the effective length of the link. As a guide, lengthening the link rod by a turn of one 'flat' (60°) will increase toe-in by just less than 1mm.

After adjustment, tighten the two locknuts to 77 Nm taking care to ensure that the ball joint sockets are aligned at 90° to each other.

Camber Adjustment

Camber is the angle from vertical of the wheel when viewed from the rear, and is said to be negative when the wheel leans inwards at the top (positive when leaning outwards).

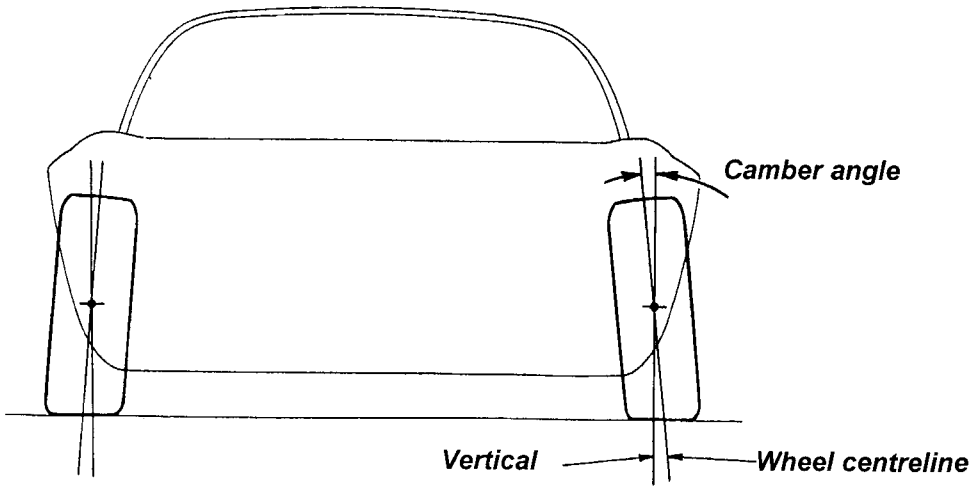

c29

The primary purpose of camber is to achieve the maximum efficiency of the tyre under cornering loads and body roll, with the specification closely allied to a particular wheel/tyre combination. The camber angle changes with suspension travel, becoming more negative on bump, and should be measured only at the specified ride height. Incorrect camber can result in handling deficiencies and excessive tyre wear.

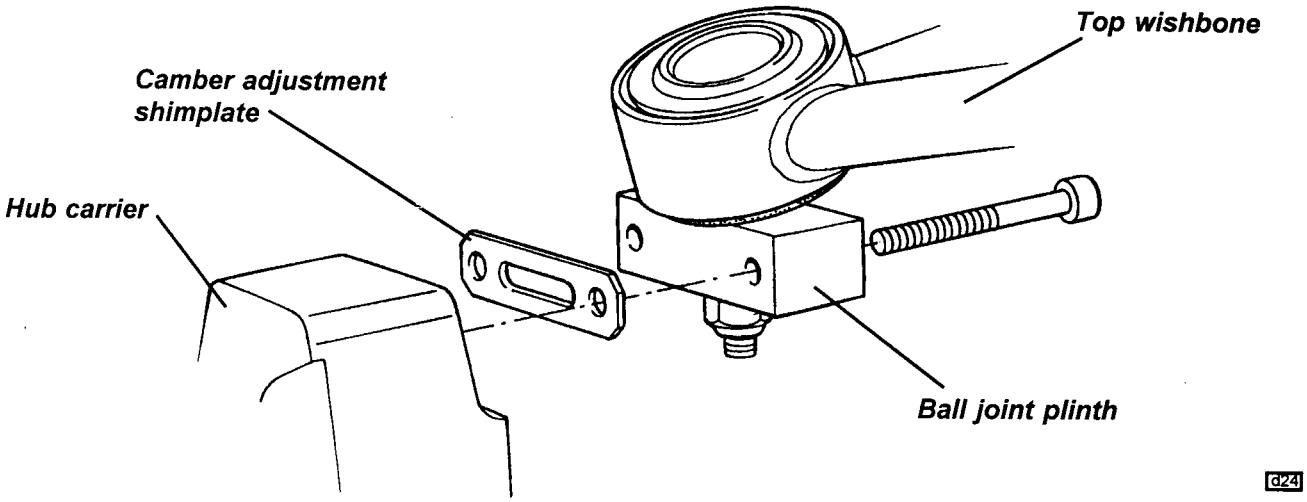

- Camber adjustment shim plates are fitted between the top wishbone ball joint plinth and the hub carrier.
- Shims are available in 1 mm thickness.
- Reducing the shim pack thickness will increase negative camber. Adding shims will reduce negative camber.
- A 1mm shim plate will alter camber by approximately 0.3°.
- Before final assembly, coat the joint face between the steel shim plate and the alloy hub carrier with Duralac MSDS anti-corrosive jointing compound (A111C6017), and assemble whilst the compound is still tacky.
- Apply Permabond A131 (A912E7034) to the threads of the two ball joint plinth fixing bolts, and torque tighten to 45 Nm.

DE.3 - SUSPENSION DISASSEMBLY/ASSEMBLY

The suspension may be disassembled without the use of any special tools other than a spring compressor if the spring is to be removed from the damper unit. Removal of the driveshaft from the hub will usually result in separation of the hub bearing two part inner race, with likely damage to the integral seal. If the hub or hub carrier is being removed for reasons other than for hub bearing replacement, the inboard driveshaft should be removed from the transmission, and the complete driveshaft assembly retained with the hub carrier and hub.

With the car on a wheel free lift and with the rear wheels removed:

1. If fitted, remove the engine bay undertray to provide access to the lower wishbone front pivot.

2. Remove the two bolts securing the brake caliper to the mounting plate, release the routing clips securing the flexible hose and parking brake cable, and support the caliper aside without straining the brake hose. Release the single retaining screw, and remove the brake disc from the hub.

3. Release the bolt securing the outer end of the toe link to the hub carrier, noting and retaining the shim washers fitted between the ball pin and conical spacer.

4. Remove the two bolts securing the top swivel joint plinth to the hub carrier, noting and retaining the camber adjustment shim pack.

5. The inboard C.V. joint is retained in the transmission by a rounded section circlip, and may be removed using a special wedge tool T000T1276, or by applying a shock pull to the C.V. joint body using a slide hammer with a forked end.

CAUTION: Do NOT attempt to remove the inboard C.V. joint from the transmission by pulling on the driveshaft. This action will cause the joint to become disassembled and may entail replacement of the joint. The components of the inboard plunging joint are held in position, for transit purposes only, by a collar within the boot which will be overidden if excessive axial force is used. Apply pressure only to the 'tulip' or outer body of the joint.

Withdraw the inboard C.V. joint from the transmission, and fit blanking plug T000T1385 into the transmission to limit the amount of transmission oil loss.

6. Remove the four M10 setscrews securing the lower swivel joint plinth to the hub carrier, disconnect the speed sensor harness (LH hub) and withdraw the hub carrier, hub and driveshaft assembly.

7. Remove the top wishbone pivot bolts, and withdraw the wishbone from the rear subframe.

8. Remove the top and bottom mounting bolts for the spring/damper unit, and withdraw.

9. Remove the lower wishbone pivot bolts and withdraw the lower wishbone and toe link.

10. If necessary, remove the top or bottom swivel joint ball pin nut, and use a ball joint splitter tool to separate the joint from its plinth. The swivel joint may be replaced using suitable press tool dollies.

11. The wishbone pivot bushes are bonded rubber type with a plastic flanged outer sleeve, a plain steel inner sleeve, and a plastic interleaf sleeve within the rubber bush to control the flexing characteristic. The bushes may be pressed out of the wishbone eyes, and new bushes fitted using suitable press tool dollies. Smear the outer surface of the new bush with rubber grease to ease fitment, and assemble as follows: Top wishbone - insert a single 30mm long bush into each pivot eye from the outside end (front of front eye, and rear of rear eye).

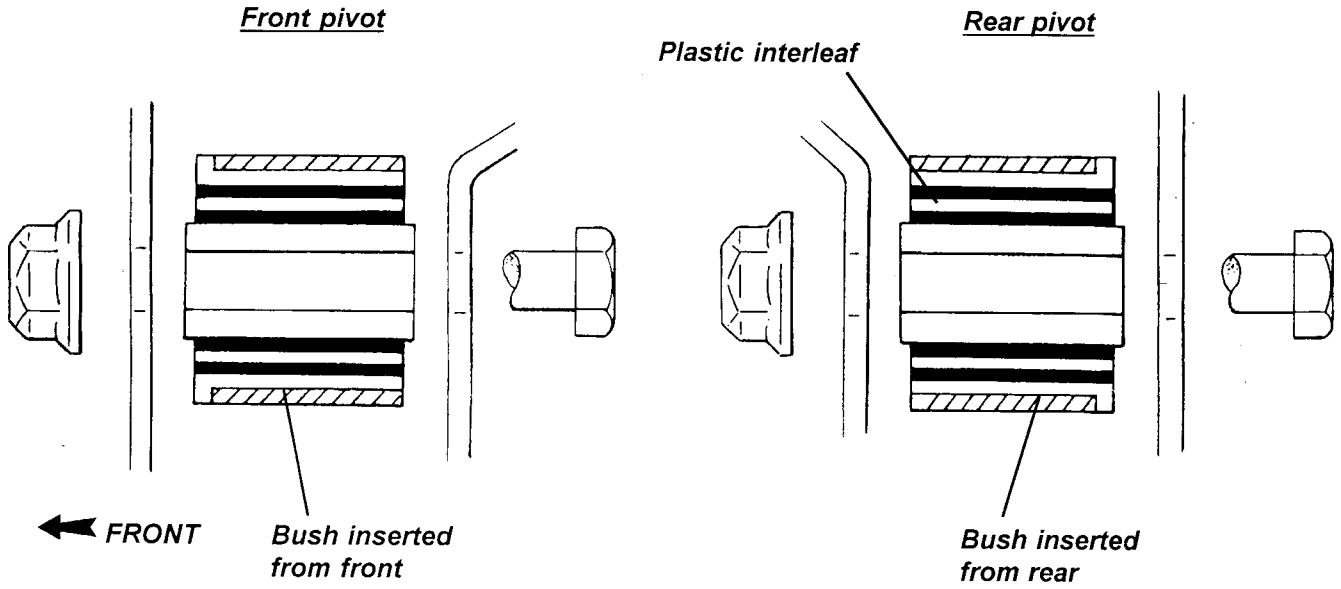

d22

Lower wishbone rear pivot - insert a single 30mm long bush from the front end of the eye.
Lower wishbone front pivot - insert a 16mm long bush into each end of the front eye.

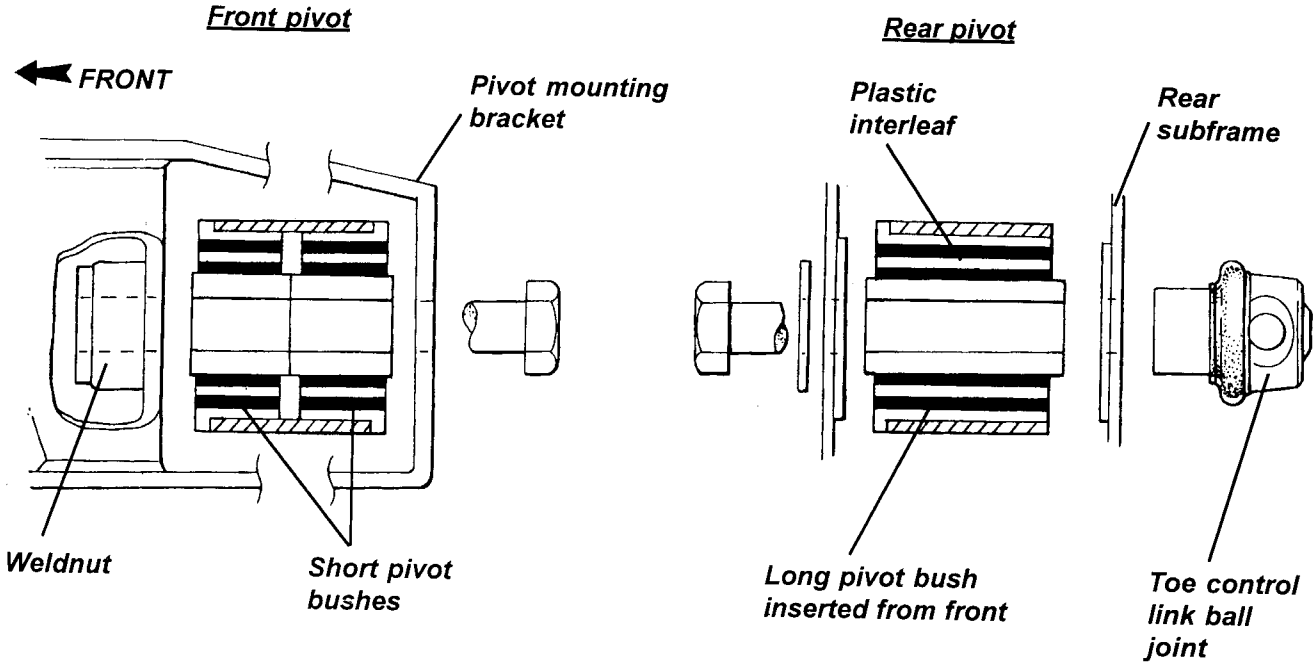

12. The road spring may be removed from the damper using a suitable spring compressor to allow the spring collar retaining circlip to be released from its damper body groove. Note that the springs were changed in June '98 from parallel (black) to barrel shaped (graphite) for improved spring stability. For parallel springs, the middle spring abutment circlip groove is used, whereas the barrel shaped springs use the top groove (lowest ride height).

13. Re-assemble the suspension in reverse order to disassembly with the following notes:
- **For assembly of the rear toe-link, refer to sub-section DE.4.**
- Smear the shank of each pivot bolt with PBC grease.
- Apply Permabond A131 (A912E7034) to the threads of any bolts tapping directly into the alloy hub carrier (except early type hub carriers with tapped holes for the brake caliper mounting plate fixings - see sub-section DE.5).
- Apply Permabond A130 (A912E7033) to the threads of the lower wishbone front pivot bolts (weldnuts).
- Coat the joint faces of the hub carrier with any steel component (e.g. swivel joint plinth, camber shim plates etc.) with Duralac MSDS anti-corrosive jointing compound (A111C6017), and assemble whilst the compound is still tacky.
- The lower ball joint pin must be tightened into the plinth before fitting the plinth to the hub carrier.
- Take care to refit the original camber adjustment shimpack.
- Lubricate the ends of the damper eye bushes with rubber grease.
- Before re-fitting the driveshaft, first renew the round section circlip (A100R6001F) on the end of the inboard joint spigot shaft. Also, check the condition of the transmission output seal, and renew if necessary. Lubricate the lip of the seal with transmission oil, and grease the corresponding shoulder on the driveshaft (C.V. joint) spigot, to reduce the danger of damaging the seal on assembly.
  Carefully insert the shaft assembly into the transmission with the (lubricated) circlip fitted on the end of the spigot shaft. Press the C.V. joint into the differential gear splines until a 'click' indicates that the circlip has engaged in its location. Pull on the body of the joint to check security.
- After refitting the brake caliper, press the brake pedal to reposition the pads before driving the car.

14. The Service Schedule specifies that the security of the front and rear suspension is checked at each service. This operation requires that all the principal suspension pivot bolts are torque checked, noting the following points:
Where a bolt is tapped into a housing or weldnut, and relies on a thread locking compound for security, it

is important to appreciate that if the bolt is disturbed, the locking compound must be re-applied. The following procedure should be adopted for all such fixings:
- Check the torque of the fixing.
- If the specified torque is attained without the fixing being disturbed (moving), take no further action.
- If the bolt moves, the locking action of the thread adhesive will have been lost. Remove the bolt completely, clean off all old adhesive with wire brush and acetone, and apply new adhesive as specified.
- Refit the bolt and tighten to the specified torque.
- If for any reason a bolt is found to have become loose, and the car has been operated for any period in this condition, the bolt should be renewed as a standard precaution.

Torque Settings:

		Nm
- Upper and lower wishbone pivot bolts		45
- Upper and lower swivel joints to plinth		55
- Upper swivel joint plinth to hub carrier		45
- Lower swivel joint plinth to hub carrier		45
- Toe link outer ball joint to hub carrier		45
- Toe link ball joint lock nuts		78
- Damper to lower wishbone		45
- Damper to chassis		45
- Caliper mounting bracket to hub carrier (early - tapped into carrier)		45
- Caliper mounting bracket to hub carrier (later - through bolted)		62
- Brake caliper to mounting bracket	- upper M10	45 - 50
	- lower M8	26 - 30
- Rear hub nut		220

DE.4 - REAR TOE-LINK FIXINGS

The inboard end of the rear toe-link shares its fixing to the chassis with the lower wishbone rear pivot bush. The outboard end of the link is fixed to a rearward extension of the hub carrier, with a conical spacer and shim washers providing a means of adjusting the amount of toe-in produced with suspension travel - referred to as the 'bump steer' characteristic.

On cars built prior to December '98, the ball pins of the toe link joints incorporate female M10 threads, into which are fitted M10 bolts, the length of which are critical to ensure adequate thread engagement without danger of 'bottoming out' in the joint, with the length of the outboard bolt dependent on the bump steer shim pack. Cars built from December '98 onwards use toe-link ball joints with integral studs, secured to the chassis and hub carrier with M10 Nyloc nuts. The outboard end conical spacer and bump steer shim washers differ for the 'integral stud' type joints, and should not be mixed with the earlier components. Service replacement ball joints are supplied only as integral stud type, complete with associated spacers and shim washers.

Cars built prior to VIN: W 5479 (December '98)

These cars use female threaded ball joints and Permabond A134 thread locking compound for secondary bolt security. A conical spacer and stack of shim washers is fitted between the outer ball joint and the hub carrier in order to provide for adjustment of the bump steer characteristic, the specification for which is fully described in sub-section XA.8. In order to optimise the thread engagement of the outer fixing bolt into the ball joint, for various shim washer configurations, two variations of bolt length are used, and it is vital to follow the build procedure detailed below to ensure complete integrity of the joint.

If the toe-link is released from the hub carrier, note and retain the shim washer stack and conical spacer fitted between the ball joint and hub carrier, and do not disturb the toe-link length setting to avoid the necessity for a subsequent full geometry check. If, on disassembly, the bolt is found to have been significantly below the assembly torque of 45 Nm, such as to allow potential movement between the ball joint and hub carrier, the bolt should be renewed (see below for correct bolt length) and the hub carrier hole and ball joint carefully inspected for wear or damage. If a ball joint requires replacement, the later type 'integral stud' joint should be fitted, together with the associated spacers and shim washers - see below.

Assembly procedure - toe-link outboard fixing (early type joint):

1. Use a proprietary degreaser (e.g. Silkolene Contact Cleaner) to degrease the female thread in the ball joint, checking that the bottom of the hole is not restricted by compacted old adhesive, limiting the penetration of the fixing bolt. If necessary, use a small screwdriver or similar to ensure all adhesive is removed, and dry the thread with a paper towel and airline.
   When fully clean, measure the depth of the threaded hole using a depth gauge or narrow steel rule. **Minimum depth = 26 mm**. If the dimension is less than this figure, replace the ball joint.

2. Establish the correct bolt and washer configuration for the number of bump steer shim washers noted on disassembly (refit the original shim washer stack):

1, 2 or 3 shim washers:	M10x60 bolt 1.8mm flat washer beneath bolt head	A111D0054F A111W4163F
4 shim washers:	M10x65 bolt 3.0mm flat washer beneath bolt head	A111D0065F A111W4180F
5 shim washers:	M10x65 bolt 1.8mm flat washer beneath bolt head	A111D0065F A111W4163F

   Note that the great majority of cars are built with 4 shim washers.

3. Assemble the bolt with washers and spacer into the hub carrier, and check the following two dimensions:

   i) The exposed shank length.
      Specification = 1.0 to 9.0 mm

   ii) The exposed bolt length.
      Specification = 21.0 to 25.0 mm

   If either of these dimensions is outside tolerance, change either the bolt length, or the washer beneath the bolt head, but do not alter the shim pack. (If the shim pack detail is lost, refer to Service Notes sub-section XA.8 to calculate the shim pack thickness)

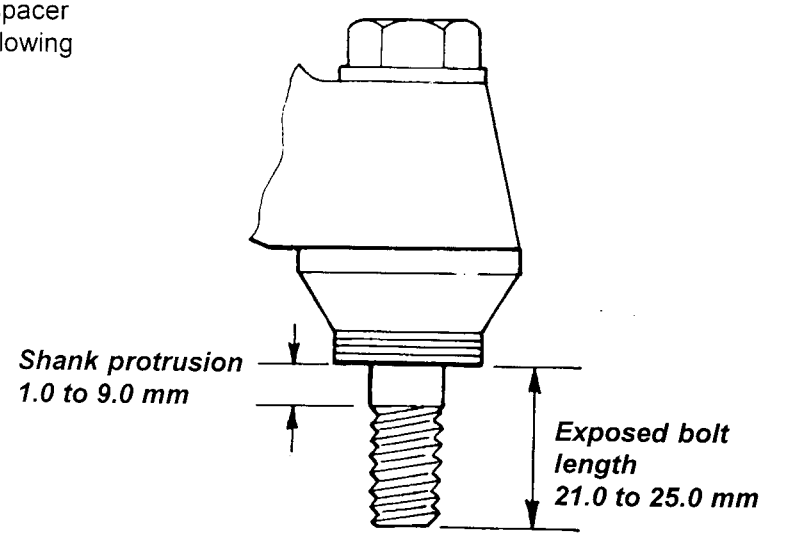

4. If the original bolt is to be refitted, thoroughly clean the bolt thread using a wire brush. Degrease and dry. If a new bolt is to be fitted, degrease and dry the bolt thread. Fit the bolt, with washer, through the hub carrier, conical spacer and shim washer stack.

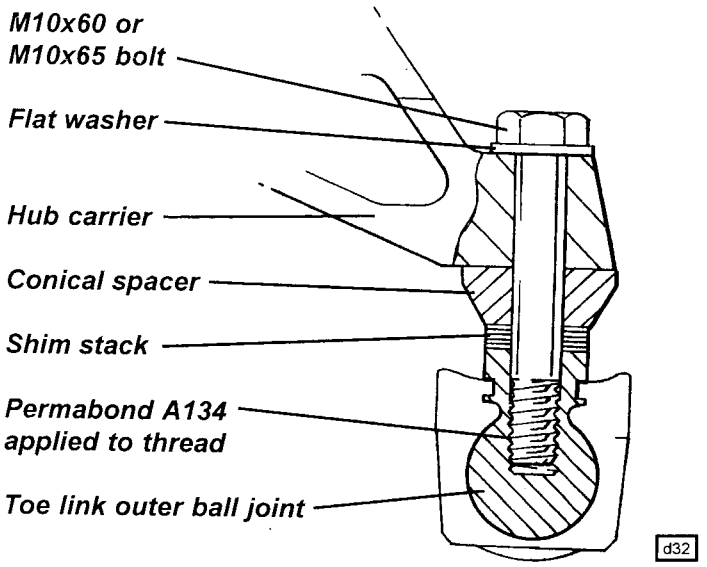

5. Apply Permabond A134 to the whole of the bolt thread from tip to shank.
(Applying threadlock before insertion of the bolt may glue the bolt into the carrier)

9. Thread the bolt into the ball joint and torque tighten to 45 Nm.

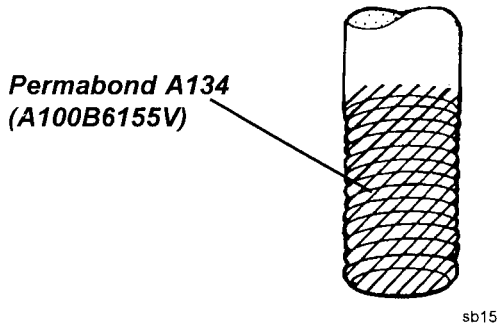

Assembly procedure - toe-link inboard fixing (early type joint):

1. Use a proprietary degreaser (e.g. Silkolene Contact Cleaner) to degrease the female thread in the ball joint, checking that the bottom of the hole is not restricted by compacted old adhesive, limiting the penetration of the fixing bolt. If necessary, use a small screwdriver or similar to ensure all adhesive is removed, and dry the thread with a paper towel and airline.
When fully clean, measure the depth of the threaded hole using a depth gauge or narrow steel rule.
Minimum depth = 26 mm. If the dimension is less than this figure, replace the ball joint.

2. If the original M10x70 bolt is to be refitted, thoroughly clean the bolt thread using a wire brush. Degrease and dry. If a new bolt is to be fitted, degrease and dry the bolt thread. Fit the bolt through the flat washer, lower wishbone bush and chassis.

3. Apply Permabond A134 to the whole of the bolt thread from tip to shank. (Applying threadlock before insertion of the bolt may glue the bolt into the wishbone bush)

4. Thread the bolt into the ball joint and torque tighten to 45 Nm **only with the car at ride height**.

Cars built from VIN: W 5479 (December '98)

Cars built from December '98 onwards use toe-link ball joints with integral studs, secured to the chassis and hub carrier with M10 Nyloc nuts. The outboard end conical spacer differs from that used for the earlier type joints by featuring an internal chamfer to clear the stud root, and by an increased height. The shim washers also differ in being of larger diameter, to fit above, rather than below, the conical spacer. The 'integral stud' type ball joint is the service replacement for the previous type joint, and is supplied only as a kit including the associated conical spacer and larger diameter shim washers.

Note:

- Each toe-link uses a right hand threaded joint on one end, and a left hand threaded joint on the other, and that whilst all cars are factory built with the RH thread outboard, the orientation of the link is not important and may become reversed in service. Always check the thread handing before ordering parts.
- When the earlier type joint is being replaced by an 'integral stud' type, in order to ensure that correct assembly of the joint is always possible, both LH and RH threaded joint kits include the outboard fixing spacer and shim washers, which are not required for inboard applications.

Assembly procedure - toe-link outboard fixing ('integral stud' type joint):

Thoroughly clean the stud before fitting through the conical spacer, small end first, then through the bump steer shim washers, and finally through the hub carrier. Fit the plain washer and a new Nyloc nut, and torque tighten to 45 Nm.

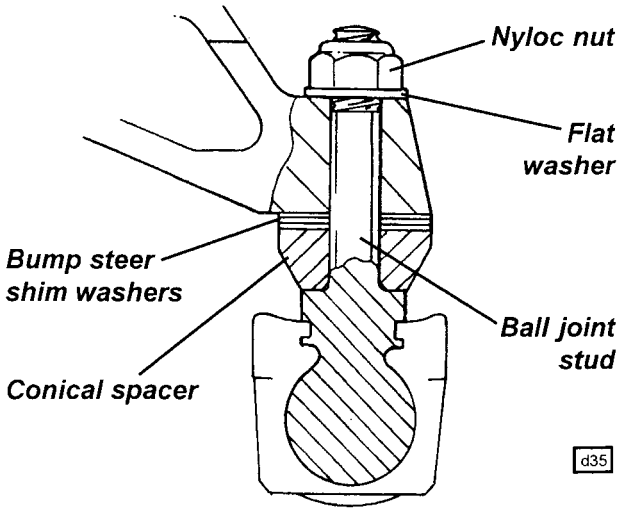

Assembly procedure - toe-link inboard fixing ('integral stud' type joint):

Thoroughly clean the stud before fitting through the chassis subframe and wishbone rear bush. Fit the plain washer and a new Nyloc nut, and torque tighten to 45 Nm **only with the car at ride height.**

DE.5 - REAR HUB BEARINGS

Each rear hub carrier houses a sealed dual taper roller bearing with a split inner race. The hub is pressed into the bearing, and the outboard driveshaft is splined into the hub. A nut on the end of the driveshaft both retains the shaft in the bearing, and applies the necessary preload to the bearing assembly. Check for any discernible free play in the hub bearing and for any signs of lubricant expulsion, indicative of seal failure. If free play is evident, or any roughness or tight spots can be felt, the bearing should be replaced. Note that removal of the rear hub will usually result in separation of the hub bearing inner race, necessitating renewal of the bearing.

To Replace Rear Hub Bearing

Note that removal of a rear hub Replacement of the hub bearing is most easily performed with the hub carrier removed to a bench:

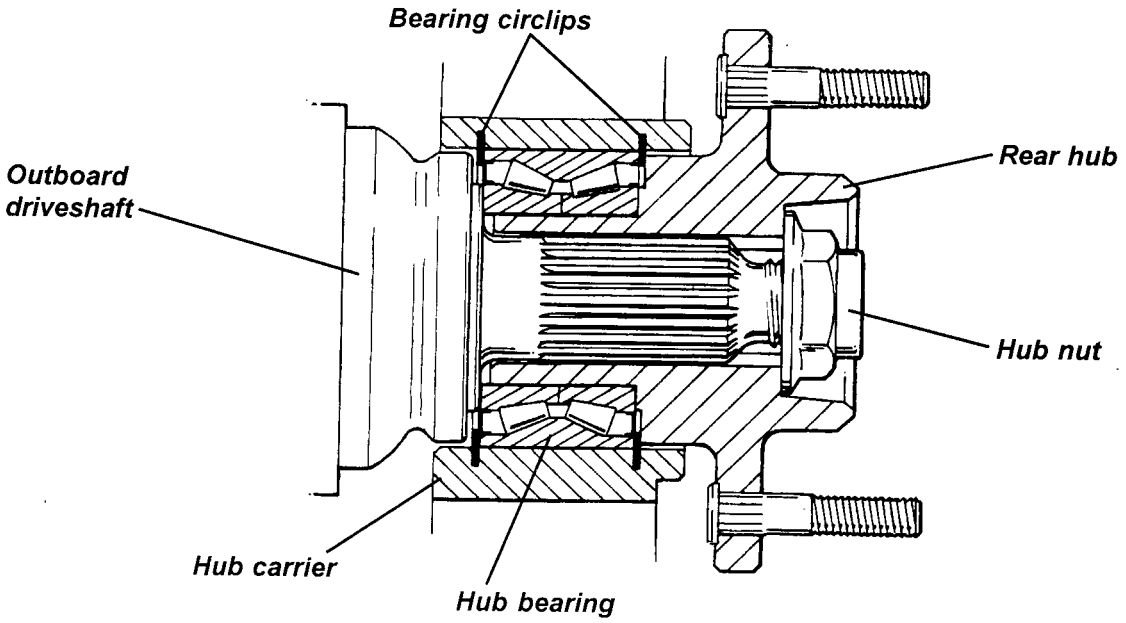

d26

1. With the wheel removed, apply the parking brake and release the driveshaft to rear hub nut. Removal of the nut can be eased by using a punch to knock the distorted end of the nut clear of the driveshaft slot.

2. Remove the two bolts securing the brake caliper to its mounting bracket, and support the caliper clear of the disc without straining the flexible hose or parking brake cable. Withdraw the brake disc from the hub.

3. Remove the wheel speed sensor from the LH hub carrier to prevent damage during driveshaft removal.

4. Remove the two bolts securing the top swivel joint plinth to the hub carrier, noting and retaining the camber adjustment shim pack.

5. Release the bolt securing the outer end of the toe link to the hub carrier, noting the conical spacer.

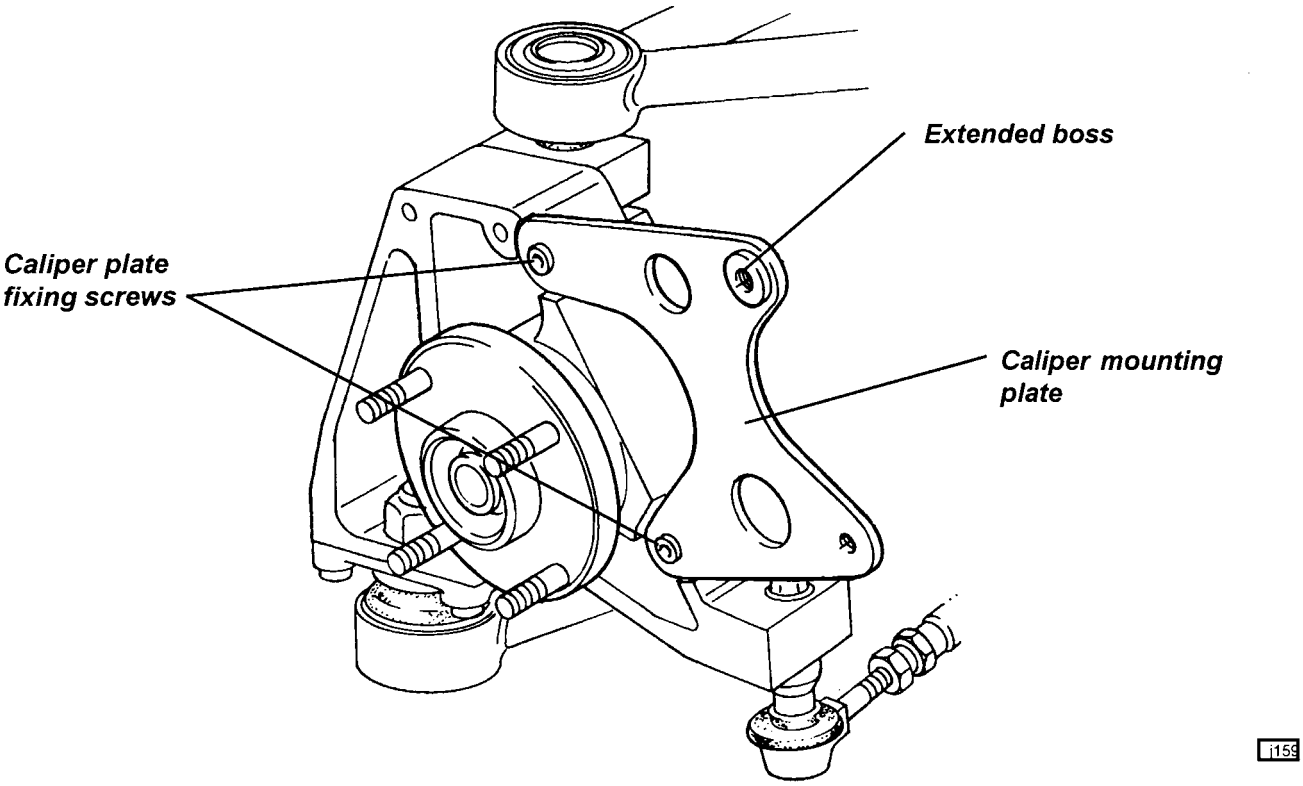

6. Use a puller tool if necessary to extract the outboard driveshaft from the hub.

7. Remove the four screws retaining the lower ball joint plinth to the hub carrier, and withdraw the hub carrier assembly to a bench.

8. Use a hydraulic press to remove the hub from the bearing, and if necessary, use a puller to withdraw the bearing inner race from the hub spigot.

9. Remove both circlips from the hub carrier, and press out the bearing.

10. Before fitting the new bearing, clean any corrosion from the bearing bore outside of the circlip grooves, and fit one circlip into position. Heat the hub carrier in an oven to 90°C for at least 20 minutes before pressing the bearing assembly into the carrier to abut the fitted circlip. Retain by fitting the second circlip.

11. Before fitting the hub, check whether the caliper mounting plate needs to be removed or replaced, as access to the lower fixing is inhibited with the hub in place. When fitting the plate to the hub carrier, ensure that the correct hand of plate is fitted, with the extended boss positioned at the outboard top. The fixing method of the caliper mounting plate to the hub carrier was changed during 1997:
Early type with tapped holes in the hub carrier: Apply Permabond A025 high temperature threadlocking compound (orange) (A912E6800V) to the threads of both shallow caphead M10 setscrews and torque tighten to 44 Nm.
Later type with through bolts and nuts: Torque tighten the bolts and self locking nuts to 62 Nm. Note that if an early car is updated with the later type hub carrier, the top ball joint carrier may have to be relieved to provide clearance for the caliper mounting plate top fixing nut.

12. Supporting the inner race of the hub bearing, press the hub fully into the bearing from the outside.

13. Re-assemble the suspension in reverse order to dis-assembly, referring also to sub-section DE.3. After torque tightening the rear hub nut to 220 Nm, lock the nut to the driveshaft by peening the nut flange into the driveshaft slot.
Pump the brake pedal to reposition the pads before driving the car.

DE.6 - WHEEL SPEED SENSOR

The wheel speed sensor is used to provide a road speed signal to the speedometer, and is mounted on a bracket fixed to the left hand rear hub carrier. The sensor is easily damaged, and if a driveshaft is to be removed, the sensor should first be withdrawn from its mounting bracket.

The gap between the sensor tip and the pole wheel (toothed ring) pressed onto the driveshaft, is critical and should be checked whenever a driveshaft is re-assembled into a hub carrier, or if a related component is replaced. The specified gap of 0.25 to 1.25 mm may be adjusted if necessary by fitting shim washers between the sensor fixing tab and the mounting bracket. Tighten the sensor fixing screw and bracket fixing screw to 9.3 Nm. Ensure that the toothed ring does not become clogged with mud or accumulated dirt.

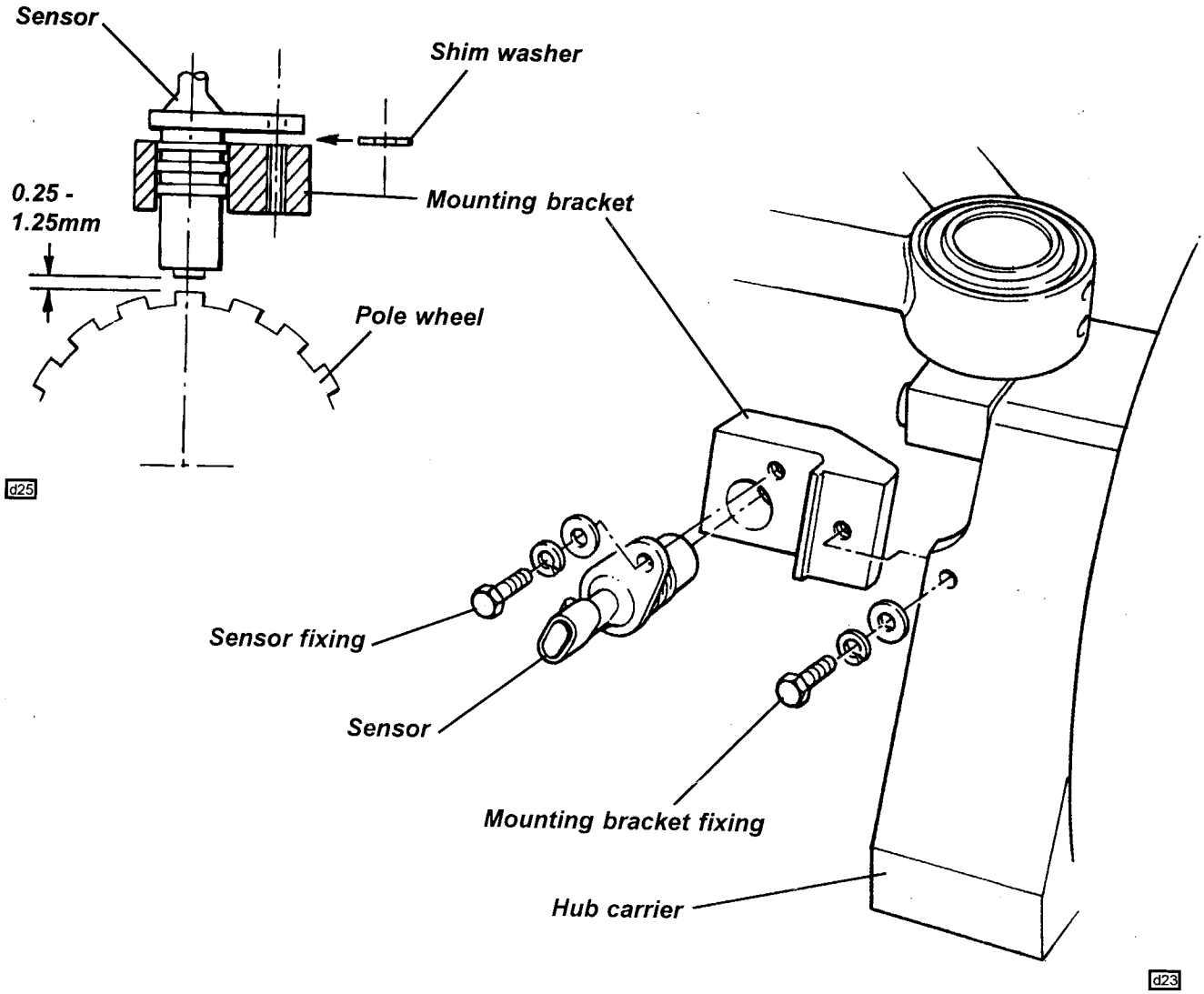

DE.7 - BARREL SHAPED ROAD SPRINGS

In June '98 at approx. VIN W 3580, the front and rear road springs were changed from parallel (black painted) to barrel shaped (graphite coloured) in order to provide increased spring stability and reduce the possibility of the spring fouling the damper body. The barrel shaped springs use different abutment grooves in the damper body, and revised rear damper chassis anchor brackets with repositioned (10mm higher) damper pick up holes. If an earlier car is to be updated with the barrel springs, all four springs must be changed, together with the following:

i) Use the uppermost spring abutment groove on both front and rear damper bodies.
ii) Replace each rear damper top mounting bracket with new bracket A111D0076F, together with load spreading plate A111D0125F. Discard the plain washers previously used on the fixing bolts.

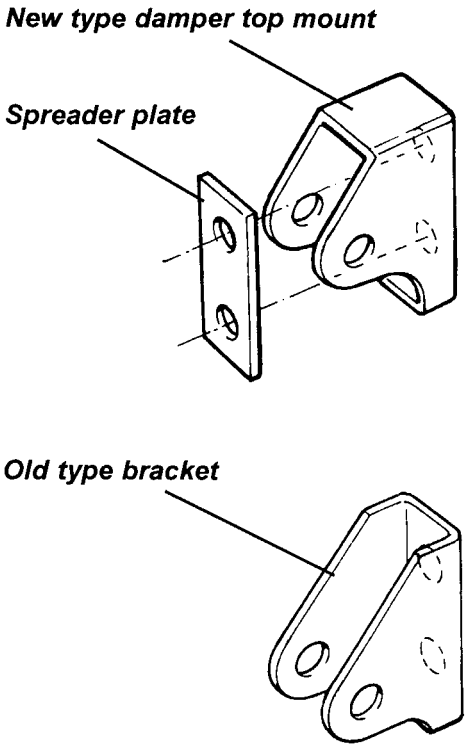

d33

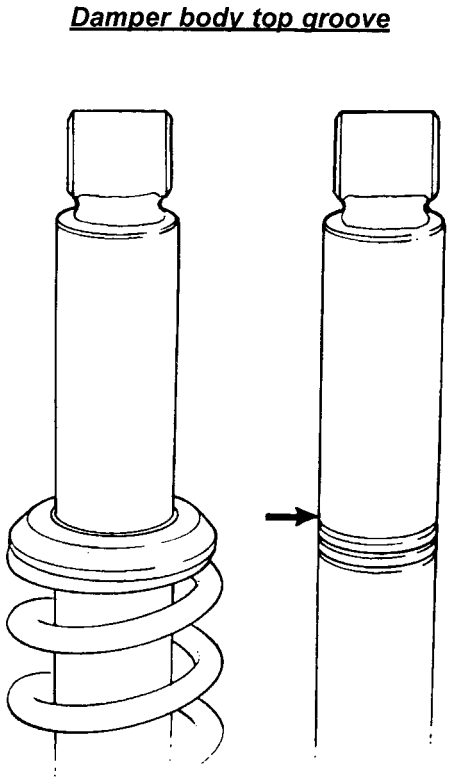

d34

ENGINE

SECTION EE - M111 ELISE

	Sub-Section	Page
General Description	EE.1	1
Maintenance Operations	EE.2	1
Engine Removal/Replacement	EE.3	5
Special Tools	EE.4	6

EE.1 - GENERAL DESCRIPTION

The 1.8 litre, 16 valve four cylinder engine used in the Lotus Elise is supplied by Rover Group, and is designated 'K16'. A full description and overhaul procedure for this unit is contained in the Rover Overhaul Manual RCL 0057ENG, a copy of which follows. References in this manual to 'K8' engine versions should be disregarded.

EE.2 - MAINTENANCE OPERATIONS

Engine Oil Level Check

The engine oil level should be checked regularly, such as every two or three fuel stops, and the oil level maintained near the top mark on the dipstick. It is especially important to keep a check on the oil level during the vehicle's first 1,000 miles (1,600 km), as both the fuel and oil consumption will be prone to some variance until the engine components have bedded in.

The best time to check the level is when the oil is warm, such as during a fuel stop. Ensure that the car is parked on a level surface and that a few minutes have elapsed since stopping the engine to allow oil to drain back into the sump. If the engine is stopped before reaching normal running temperature, the oil will not drain back to the sump so readily, and the dipstick will display an artificially low reading.

Dipstick: The dipstick is identifiable by its yellow loop handle, and is located at the right hand rear of the engine. Withdraw the dipstick, and wipe with a paper towel. Replace the dipstick, pressing firmly to make sure it is fully seated, and withdraw again to inspect the oil level. The correct level is to the upper mark on the dipstick.

Topping Up: If topping up is necessary, remove the oil filler cap from the cam cover, and in order to allow the crankcase to ventilate, remove the dipstick. Add a suitable quantity of a recommended engine oil (see Section OG) taking care not to spill any oil onto engine or electrical components; use a funnel if necessary.

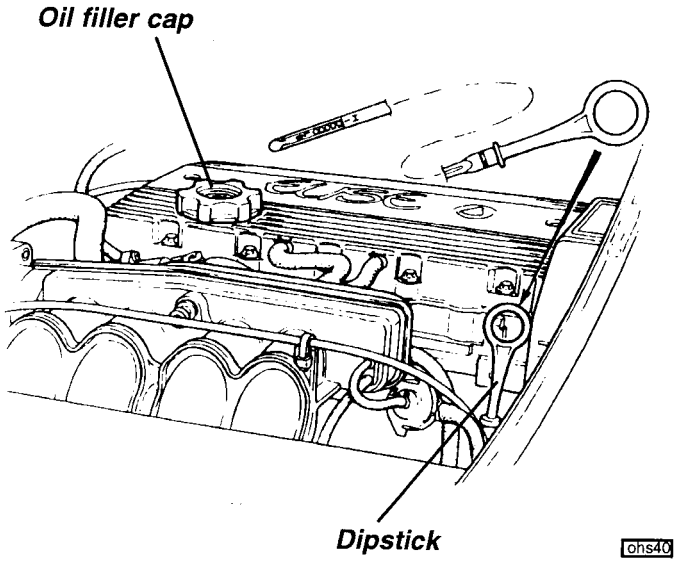

The difference between high and low dipstick marks is equivalent to 1.0 litre (1.8 imp.pt). Allow several minutes for the oil to drain through to the sump before re-checking the oil level. Do NOT overfill, or the oil will become aerated and its lubricating properties degraded. Refit the filler cap and turn clockwise until secure.

Engine Oil Change

The use of high quality oil, renewed at the specified intervals, is the key to engine longevity and sustained performance. Adhere strictly to the engine oil and filter change intervals specified in the Maintenance Schedule.

On cars so fitted, the engine bay undertray/diffuser must be removed for access to the engine sump and filter. The drain plug is located at the right hand front of the sump, and should be removed to drain the sump immediately after a run when the oil is warm and the impurities are still held in suspension. Take suitable precautions to guard against scalding. Allow to drain thoroughly before cleaning the drain plug, fitting a new sealing washer, and tightening to 25 Nm.

Refill with a recommended lubricant via the oil filler on the camshaft cover, to the top mark on the dipstick. Be sure to remove the dipstick to permit crankcase venting, and allow sufficient time for the oil to drain through to the sump before checking the oil level on the dipstick. Take care not to overfill. Re-fit the oil filler cap securely, and check the oil level again when the engine is fully warm (see above).

Oil Filter

The oil filter is horizontally mounted at the front of the engine, and is accessible from beneath (remove the engine bay undershield/ diffuser if applicable). The filter should be renewed, at intervals specified in the Maintenance Schedule, by turning in a counterclockwise direction using an oil filter wrench if necessary. Discard the filter after removal (see 'Used Engine Oil').

Before fitting a new filter, clean the mating face on the engine, and smear the new seal on the filter with clean oil. Add a small amount of clean oil into the filter, screw onto its spigot and tighten BY HAND just sufficiently to make a firm seal, typically 2/3 to 3/4 of a turn after the filter sealing ring has made contact.

Start the engine and check for oil leaks. Re-check the security of the filter, further tightening by hand if necessary. Check the oil level (see above) when the engine is fully warm.

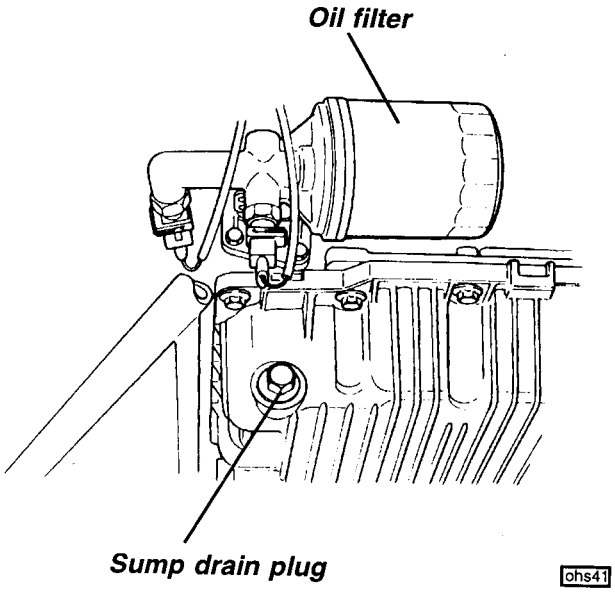

Used Engine Oil

WARNING: - Prolonged and repeated contact with used engine oil may cause serious skin disorders, including dermatitis and cancer.
- Avoid contact with skin as far as possible and wash thoroughly after any contact.
- Keep out of reach of children.

PROTECT THE ENVIRONMENT: It is illegal to pollute drains, water courses and soil. Use authorised waste collection facilities, including civic amenity sites and garages providing facilities for disposal of used oil and used oil filters. If in doubt, contact your local authority for advice on disposal.

'Severe Service' Conditions

Certain operating conditions can cause rapid degradation of the oil quality, either by the accumulation of dirt particles, or by the absorption of water from condensation. If either of the 'severe service' conditions described below apply, it is recommended that the oil and filter be changed twice as frequently as is listed in the Maintenance Schedule. Change the oil and filter as soon as possible after driving in a dust storm.

Driving in dusty areas (e.g. on unmetalled roads);
Stop/start city driving with frequent short trips where the engine rarely warms up thoroughly (especially in cold weather); and/or frequent or prolonged idling.

Air Cleaner Element

The air filter should be inspected at intervals dependent on the operating conditions. When the vehicle is operated in a relatively clean environment, the element should be renewed at intervals specified in the Maintenance Schedule, but where a dusty or smog laden atmosphere prevails, more frequent replacement will be required dependent on the level of pollution.

A disposable folded paper type air cleaner element is fitted in a housing at the left hand side of the engine bay.

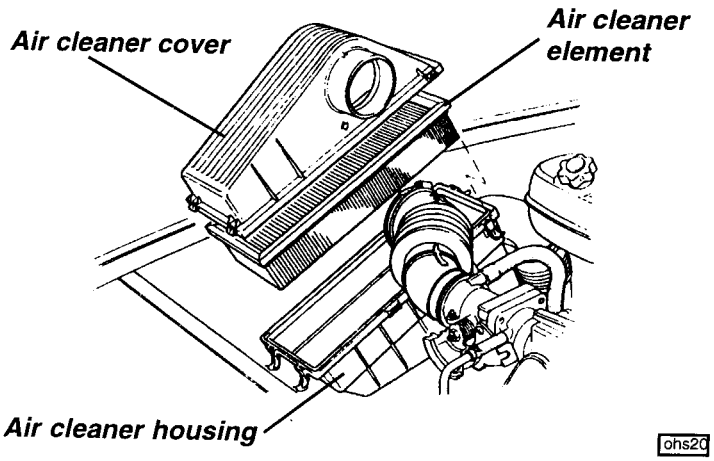

To replace the filter element, leave the hose attached, and release the four over-centre clips securing the top cover of the air filter housing. Raise the cover and ensure that the filter element remains in the lower housing before swinging the cover aside. Lift out the element and clean the inside of the filter housing and cover, including the joint line recess.

Fit the new element into position in the lower housing, and refit the top cover, ensuring that the filter seal is correctly located in the cover recess. Engage each of the four over-centre fasteners, and snap each clip closed.

Alternator Belt

A single multi-rib type belt is used to transmit drive from the crankshaft to the alternator. The belt requires no periodic maintenance other than a visual check of its condition. If the belt exhibits any evidence of physical damage, cracking, fraying, perishing, abrasion or contamination, it should be replaced. Note that some superficial cracking of the belt rib rubber covering is normal and need not cause concern, but isolated deeper cracks, affecting the underlying belt structure, require the belt to be replaced. In the case of oil contamination, the cause must be identified and rectified, and each of the pulleys must be thoroughly degreased before the new belt is fitted.

To replace the belt:

- Slacken the alternator pivot bolt (A).
- Slacken the clamping bolt (B) securing the alternator to the slotted strap.
- Turn the adjuster bolt (C) in the end of the slotted strap to allow the alternator to be swung towards the engine, and unhook the belt from the pulleys.
- Fit the new belt over the two pulleys, ensuring it is correctly seated in the grooves, and tension the belt such that moderate finger pressure at the centre of a belt run produces a one way deflection of 6 mm.
- Tighten the clamping and pivot bolts.

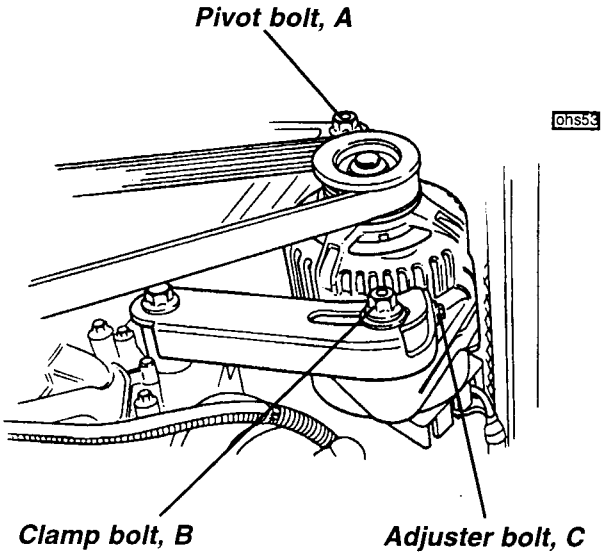

Sparking Plugs

Renew the sparking plugs in accordance with the Maintenance Schedule. Remove the two screws securing the spark plug access cover, and pull off the HT lead from each spark plug. Use an airline or vacuum cleaner to remove any loose dirt from the plug wells before unscrewing the spark plugs using a 16 mm (5/8") A/F spark plug socket spanner. Take precautions to prevent debris falling into the open plug holes.

Check the electrode gap of each new plug, and reset if necessary to 0.9mm (0.035 in). Fit the plugs taking care not to cross-thread, and tighten to 25 Nm. Refit the plug leads, pressing firmly, and checking that they are correctly located in their routing clips. Secure the access cover.

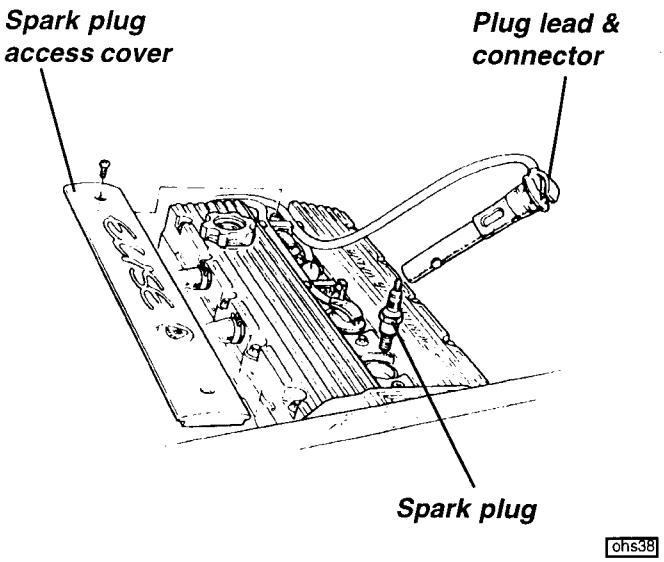

EE.3 - ENGINE REMOVAL/REPLACEMENT

The engine may be removed from above, with or without the rear clamshell in position. It is recommended to remove the clamshell for improved access, and to reduce the possibility of paint damage. If the clamshell is left 'in situ', the luggage comopartment divider panel (if fitted) must be removed in order to allow the power unit to be turned thro' 90° as it is withdrawn.

The operation is best performed on a wheel free lift as in order for the driveshafts to be withdrawn, the upper ball joints must by released from the hub carriers.

1. Fuel Pressure Relief Procedure

   The fuel line between pump and injector rail, and the injector rail itself, contain pressurised fuel both when the engine is running, and after switching off. The following procedure must be used before disconnecting the fuel feed line:

- Pull out the fuel pump 10A fuse (to the rear of the ECM), start the engine (if possible), and run until it stops from starvation. Crank the engine for a further 10 seconds.
- If the engine is a non-runner, pull out the fuel pump fuse, and crank the engine for a total time of 60 seconds to minimise residual fuel pressure.
- Disconnect the battery.
- Use a shop towel to absorb the small amount of pressurised fuel remaining as the fuel feed pipe is disconnected at its push fit connector between the fuel filter and fuel rail inlet hose; pull back the collar to release the grip of the connector on the pipe. Plug the pipe ends.
- In a similar manner, disconnect the low pressure fuel return hose.

2. To remove the rear clamshell, refer to Section BN.

From beneath the car:

3. Drain the coolant and transmission oil.

4. Remove the exhaust downpipe between the exhaust manifold and catalytic converter.

5. Remove the gear cables from the transmission lever spigots (prise off), and pull off the spring clips retaining the outer cables to the abutment bracket.

6. Release the earth braid from the transmission end case, and the throttle cable from the sump 'P' clip.

7. Release the engine steady arm from its anchor bracket on the rear of the the sump.

8. At each side of the car;
   - Release the two bolts securing the top ball joint plinth to the hub carrier, taking note of the camber adjustment shim plates.
   - The inboard C.V. joint is retained in the transmission by a rounded section circlip, and may be removed using a special wedge tool T000T1276, or by applying a shock pull to the C.V. joint body using a slide hammer with a forked end.

   CAUTION: Do NOT attempt to remove the inboard C.V. joint from the transmission by pulling on the driveshaft. This action will cause the joint to become disassembled and may entail replacement of the joint. The components of the inboard plunging joint are held in position, for transit purposes only, by a collar within the boot which will be overidden if excessive axial force is used. Apply pressure only to the 'tulip' or outer body of the joint.

   - Withdraw the inboard C.V. joint from the transmission, and fit blanking plug T000T1385 into the transmission to limit the amount of transmission oil loss.

From above:

9. Release the air cleaner mounting plate from the chassis, and release the fuel filter mounting from the plate. Withdraw the plate complete with air cleaner assembly.

10. Remove the header tank: Disconnect the two hoses, release the two fixing bolts, and withdraw the tank.

11. Release the clutch slave cylinder from the mounting bracket, and support aside.

12. Release the coolant outlet hose from the pipe at the front of the engine bay, and release the pipe 'P' clip from its bracket at the front of the engine. Release the coolant return hose from the water rail at the left hand end of the engine, and disconnect the heater return hose.

13. Disconnect the throttle cable and purge pipe from the throttle body, and release the tank breather pipe from its clips along the rear side of the engine.

14. Disconnect the engine harness from the relay module, ECM and associated connector blocks. Disconnect the main battery cable from the starter solenoid, and the cable from the solenoid to the positive post.

15. Release the MAP sensor hose from the fuel trap at the right hand end of the intake plenum.

16. Support the power unit before removing the LH engine mounting brackets from the transmission housing. Release the RH engine steady arm, and release the mounting bracket from the RH end of the engine.

17. Carefully hoist the power unit from the car, whilst monitoring for any remaining connections.

Refit the unit in reverse order to removal with the following notes:

- Before re-fitting a driveshaft, first renew the round section circlip (A100R6001F) on the end of the inboard joint spigot shaft. Also, check the condition of the transmission output seal, and renew if necessary. Lubricate the lip of the seal with transmission oil, and grease the corresponding shoulder on the driveshaft (C.V. joint) spigot, to reduce the danger of damaging the seal on assembly.
  Carefully insert the shaft assembly into the transmission with the (lubricated) circlip fitted on the end of the spigot shaft. Press the C.V. joint into the differential gear splines until a 'click' indicates that the circlip has engaged in its location. Pull on the body of the joint to check security.
- Refer to section DE for rear suspension assembly details.
- For coolant refilling procedure, refer to section KF.
- For transmission details and gear cable adjustment, refer to section FH.

Torque Figures	Nm
RH engine mounting bracket to engine	145
RH engine mounting bracket to rubber mounting	82
RH engine rubber mounting to chassis	45
RH engine steady arm bolts	87
LH engine mounting bracket to rubber mounting	82
LH engine mounting bracket to engine	45
Lower steady arm bracket to sump	80
Lower steady arm bolts	77 (Use Permabond A130 {A912E7033V} at sump end of arm)

EE.4 - SPECIAL TOOLS

The following engine special tools are available under Lotus part number:

Flywheel locking tool (transmission fitted)	T000T1289
Flywheel locking tool (transmission removed)	T000T1367
Camshaft locking tool	T000T1282
Crankshaft rear oil seal replacer	T000T1284
Valve stem oil seal remover/replacer	T000T1285
Cylinder liner clamps	T000T1288
Sump alignment pins (2 off)	T000T1290
Torx E12 cylinder head bolt socket	T000T1366
Crankshaft/Camshaft front oil seal replacer	T000T1286
Camshaft holding/turning tool	T000T1280
Engine lifting brackets	T000T1283

ENGINE MANAGEMENT & FUEL INJECTION

SECTION EMN - M111 ELISE

	Section	Page
Introduction & Component Location	EMN.1	3
'Lotus Check' Scanner Tool	EMN.2	4
Throttle Cable Adjustment	EMN.3	7
Electronic Control Module (ECM)	EMN.4	7
Relay Module	EMN.5	8
Manifold Absolute Pressure (MAP) Sensor	EMN.6	9
Crankshaft Position Sensor	EMN.7	10
Engine Coolant Temperature (ECT) Sensor	EMN.8	11
Intake Air Temperature (IAT) Sensor	EMN.9	12
Throttle Position (TP) Sensor	EMN.10	13
Idle Air Control (IAC) Valve	EMN.11	14
Oxygen (O_2) Sensor	EMN.12	15
Camshaft Position Sensor (VVC only)	EMN.13	16
VVC Mechanism Control Solenoids (VVC only)	EMN.14	17
Oil Temperature Sensor (VVC only)	EMN.15	18
Fuel System	EMN.16	19
Ignition System	EMN.17	24

COMPONENT LOCATION DIAGRAM

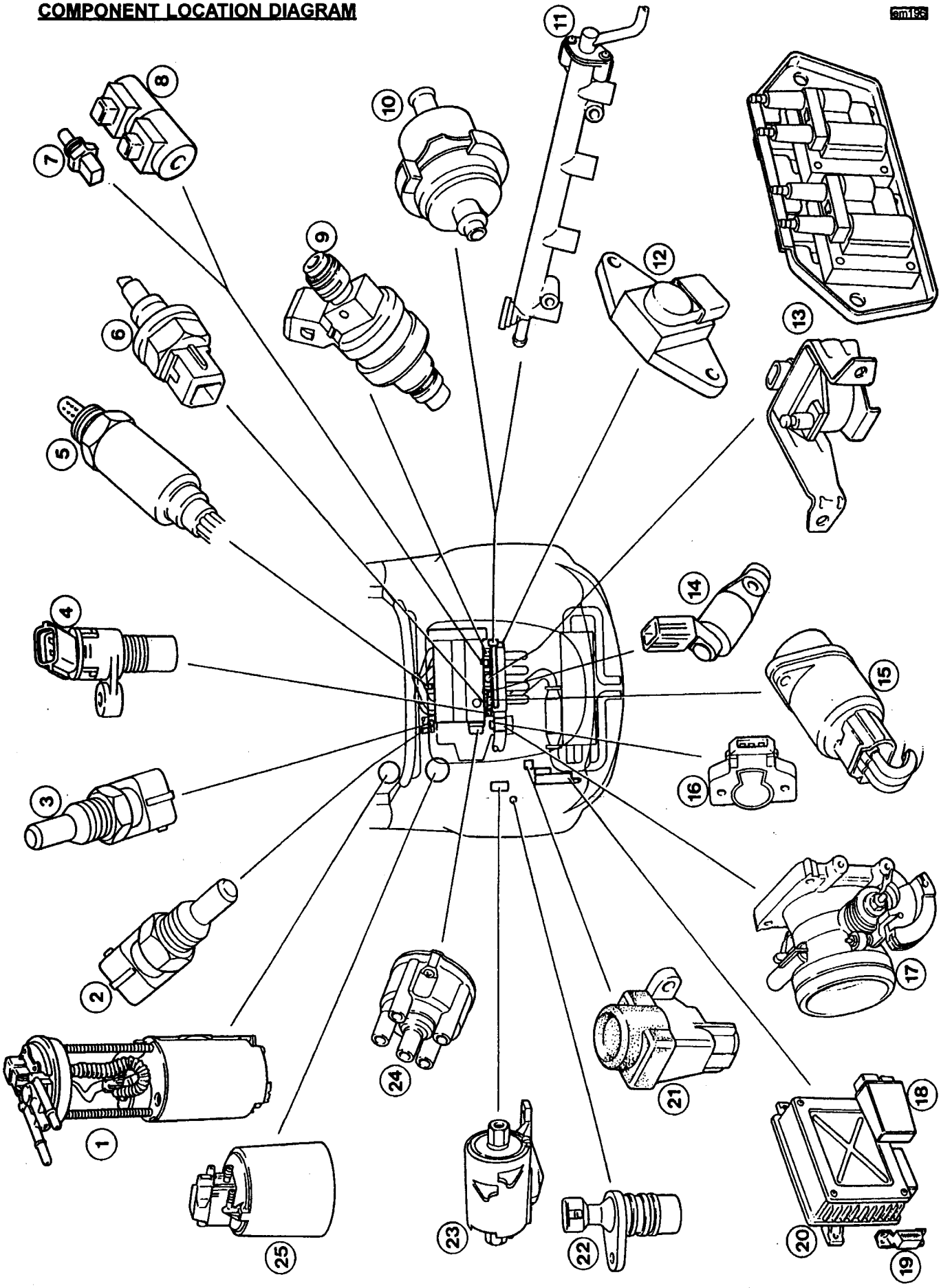

EMN.1 - INTRODUCTION

Key to Component Location Diagram

1. Fuel pump
2. Engine coolant temperature (ECT) sensor
3. Water temperature gauge sender (vertical)
4. Crankshaft position sensor
5. Oxygen sensor
6. Intake air temperature (IAT) sensor
7. Oil temperature sensor (VVC only)
8. VVC control solenoids
9. Fuel injector
10. Fuel pressure regulator valve
11. Fuel rail
12. Manifold air pressure (MAP) sensor (VVC only)
13. Ignition coil (std. and VVC shown)
14. Cam angle sensor (VVC only)
15. Idle air control (IAC) valve
16. Throttle postion (TP) sensor
17. Throttle body
18. Relay module
19. Data link connector (DLC)
20. Electronic control module (ECM)
21. Inertia switch
22. Vehicle speed sensor
23. Fuel filter
24. Distributor (std. only)
25. Evaporative emissions canister

The 1.8 K Series engine fitted to the Elise is equipped with a Modular Engine Management System (MEMS), version '1.9' for the standard engine, and version '2J' for the VVC engine, abbreviated to 'MEMS 1.9' or 'MEMS 2J'. Both versions use a single electronic control module (ECM) to control both the fuel injection and ignition systems, and base the control strategy on engine speed/air density measurement. Engine speed data is derived from a flywheel sensor, with air density calculated from manifold air pressure and manifold air temperature signals.

The engine features a throttle body housing a single throttle butterfly valve, with position sensor, feeding into an intake plenum chamber with four individual intake tracts, each of which is fitted with a fuel injector positioned to spray fuel onto the back of the intake valves. Standard engines use a lightweight moulded plastic plenum/manifold, whereas on VVC engines, the manifold is alloy. Fuel delivery quantity is controlled by the length of time (pulse width) for which the solenoid operated injectors are energised, with the injectors of standard engines grouped in pairs, 1 with 4, and 2 with 3, whereas the VVC engine uses a fully sequential strategy with individual control of each injector.

The air/fuel ratio is calculated by the ECM using a three dimensional map to provide a basic fuelling specification under various operating conditions. In order to refine the fuel delivery and cater for special conditions, various types of compensation are provided:

- *Cranking enrichment;* During cranking, when engine speed is below about 400 rpm, the injection pulse width is increased, dependent on coolant temperature, to aid starting.
- *After start enrichment;* Immediately after starting, the pulse width is increased, but decays at a rate dependent on coolant temperature.
- *Acceleration enrichment;* Signals received from the throttle position and MAP sensors which indicate acceleration is demanded, will prompt additional fuel for smooth and ready response.
- *Overrun fuel cut-off;* At normal running temperature, when the throttle is closed and engine speed is above about 2,000 rpm, indicating engine overrun, the fuel supply is shut off to enhance economy and reduce emissions.
- *Overspeed fuel cut-off;* At a specified engine speed, the injectors are cut off in order to protect the engine from overspeeding.
- *Oxygen sensor feedback;* By measuring the oxygen content of the exhaust gas, any adjustment necessary to maintain the air/fuel ratio to that required by the catalytic converter for optimum conversion efficiency may be computed by the ECM. An electrically heated oxygen sensor is used to ensure its speedy attainment of working temperature after a cold start.
- *Battery voltage correction;* The ECM senses battery voltage, and applies a correction factor to take account of any variation in fuel delivery due to battery voltage fluctuation.

An idle air control valve mounted on the throttle body, is used to regulate the amount of air by-passing the throttle plate, and hence control engine idle speed.

Two types of ignition system are used, both controlled by the ECM. Standard engines use a single ignition coil mounted on the right hand side of the cylinder block, and a distributor driven from the rear end of the inlet camshaft. VVC engines use a distributorless ignition system (DIS) which employs a pair of double ended ignition coils and a 'waste spark' system whereby each coil fires two spark plugs simultaneously (1

paired with 4, and 2 with 3), the spark in the cylinder on the exhaust stroke being 'wasted'. The twin coil pack is mounted on the cylinder block as for standard engines.

On VVC engines, the variable valve control mechanism is also controlled by the ECM. Two solenoid valves attached to the hydraulic control unit on the inlet camshaft mechanism are used to distribute oil pressure either side of a piston in order to alter the amount of inlet cam cyclical speed variation, and corresponding valve timing.

The ECM is calibrated to recognise sensor readings which are outside of the acceptable range, and if such a signal is received from the coolant sensor, inlet air temperature sensor, or MAP sensor, it will substitute a default value to enable the engine to continue to run, in a 'back up', or 'get you home' mode. As a vehicle security measure, the engine management ECM incorporates an immobilisation feature, whereby a coded signal must be received from the security '5AS' module before the starter and ignition circuits become active. For security details, see electical section MN, or the 'Lotus Check' instruction booklet.

EMN.2 - 'LOTUS CHECK' SCANNER TOOL

In order to provide for communication with the engine management system electronic control module, a hand held electronic scanner tool, 'Lotus Check' (part number T000T1346), may be plugged into a special 16 terminal harness connector socket, known as a Data Link Connector (DLC), located in the rear luggage compartment.

Cars without 'bootbox' (pre Sept. '98) ***'Bootbox' cars (post Sept. '98)***

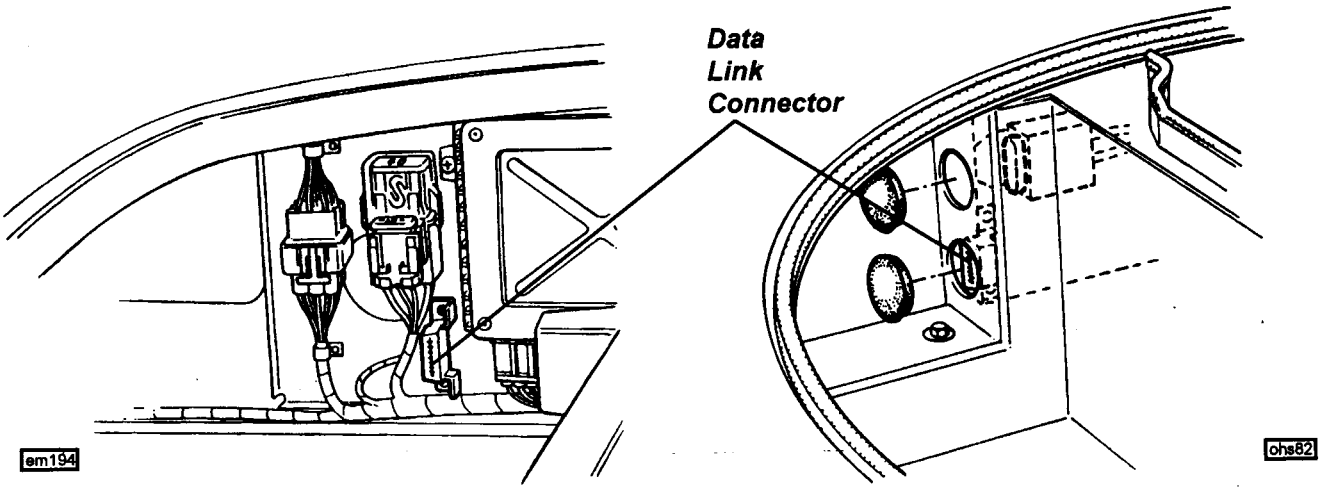

The 'Lotus Check' tool allows the following operations to be performed:

- PRE-TEST; This is used to check whether any faults have been detected since the last pre-test.
- TEST; This runs a test sequence for various engine management components.
- LIVE DATA; This programme enables current readings from various sensors to be displayed or printed.
- PROG; Applicable only to VVC models - allows matching of engine and security modules after unit replacement.
- TUNE; Applicable only to VVC models - checks and calibrates certain components.

Contents of the Lotus Check Tool T000T1346

The Lotus Check Tool T000T1346 is supplied in a plastic case, and contains the following items:

- Scanner Tool with LCD display panel;
- Printer;
- Power Harness;
- Adaptor Harness;
- MEMS 1.9 Programme Card;
- MEMS 2J Programme Card;
- 5AS Security Programme Card;
- Security Module ('Dongle');
- Instruction Booklet.

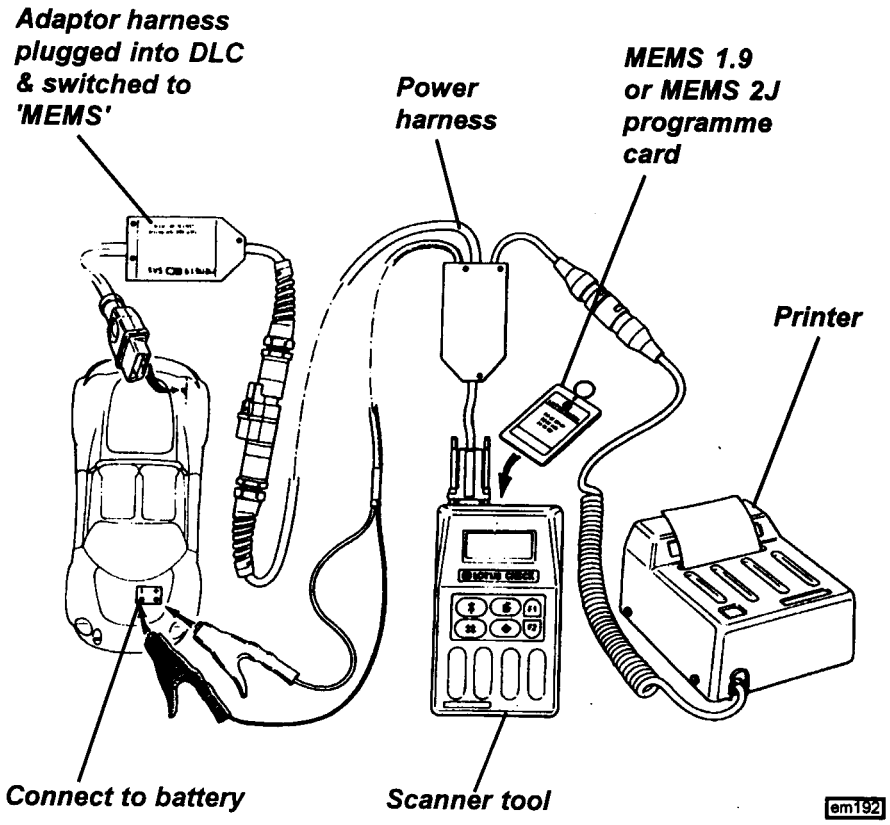

To Connect 'Lotus Check'

To connect the equipment, proceed as follows:

i). Plug the power harness into the scanner tool and the printer;
ii). Insert the MEMS 1.9 (standard engine) or MEMS 2J (VVC engine) programme card into the scanner tool slot, label uppermost.
iii). Open the front and rear compartment lids;
iv). Connect the power harness crockodile clips to the battery in the front compartment;
v). Plug the adaptor harness into the 16 terminal diagnostic link connector (DLC);
vi). Select 'MEMS' on the adaptor harness switch;
vii). Press F2.

Pre-Test

Whenever the ignition is switched on, or the engine is running, the ECM monitors the readings of all the sensor inputs, and compares them with pre-programmed tolerance bands. If any readings should fall outside of these tolerances, the fault will be recorded in memory, and a substitute 'default' value used to enable the engine to continue to run at a reduced performance level. If the fault is intermittent, and is no longer present when the ignition is next turned on, the ECM will reinstate the sensor input, but will record the fault in memory. Dependent on the nature of the fault, this may or may not have been noticed by the driver.

At each maintenance service, the 'Lotus Check' tool should be connected, and the Pre-Test selected from the main menu to check whether any faults have been detected since the last Pre-Test. This test takes only a few minutes, during which the scanner display will ask a series of questions and issue instructions to guide the operator through the test, which is self explanatory, with the following special notes;
'Is fuel rail temperature sensor fitted?' - answer 'NO'.
'How many cooling fans are fitted?' - answer '1'.
References to a 'current clamp' are not applicable in this application - answer 'Proceed'.

After the test has been run, a print out should be obtained as the results are not displayed in any other manner. If any 'default flags' are shown, the Pre-Test should be run again to establish whether the fault is still current. If not current (i.e. the fault is intermittent, and is no longer detected), the memory will be cleared of the default flag, and the next time the test is run, no flag will be shown. Be aware that if a successful repair is made, the next time a Pre-Test is run, the fault will still be flagged, as having been detected since the previous

test. Run a further test to verify the repair.

Prog

The 'programme' menu is available only on the MEMS 2J card, and allows matching of the engine management and security 5AS modules if one or the other is replaced. At the instant of ignition is switch on, the security 5AS module sends a unique coded signal to the engine management ECM, which must be recognised by the ECM before it will allow the engine to run. If no code, or an incorrect code is received, the ECM will prevent fuelling of the engine, although the engine may crank - typically resulting in engine start followed immediately by a stall. If either the engine ECM or security 5AS module is replaced, or swopped from another vehicle, the ECM must be taught to recognise the coded 5AS signal by selecting 'MEMS MATCHING' from the 'PROG' menu and following the instructions.

When mems matching is complete, it is then necessary to select 'CALIBRATION ID' from the 'PROG' menu to complete the operation - ***Unless this is performed, the engine will not run.***

Note that for standard cars, ECM matching can only be carried out using the '5AS' card and security password system - refer to service notes sub-section MN.2.

Test

This programme is more comprehensive than the Pre-Test, and takes about 10 minutes to complete tests on many of the engine management components. During this routine, the scanner display will ask a series of questions and issue instructions to guide the operator through the test, some parts of which require that the engine be run up to normal operating temperature. The test should be used any time that a driveability concern is reported, or if the Pre-Test does not identify the problem.

Components tested in this routine include:

- Coolant temperature sensor;
- Fuel injectors;
- Fuel pump;
- Oxygen sensor heater relay;
- Purge valve solenoid;
- VCC control solenoids (note that it is not normally possible to hear these solenoids operate);
- Throttle position sensor;
- Cooling fan;
- Tachometer;
- Idle air control motor;
- Oxygen sensor;

The test results should be printed out to identify any detected faults. If a fault is recorded, note that problem may be in the component or the associated circuitry. Refer to the appropriate EMN sub-section or circuit diagram to diagnose the fault. Displaying 'Live Data' (see below) may also help diagnosis.

Live Data

This programme, which requires the ignition to be switched on, allows readings from various sensors to be displayed with or without the engine running. This facility may also be used to observe the sensor readings whilst the car is being driven, which may help to identify an intermittent problem. Requesting a print, will freeze the data at that instant and print out a complete list. Comparison of data with a known good car may help to identify a problem. Erroneous readings may be due to a faulty sensor, or its associated circuitry; refer to the appropriate EMN sub-section or circuit diagram.

Engine parameters monitored include:

- Engine rpm;
- Manifold vacuum;
- IAC valve position;
- Throttle position sensor reading;
- Coolant temperature;
- Inlet air temperature;
- Oxygen sensor voltage.

Tune

The 'test' programme is available only on the MEMS 2J card, and allows the oxygen sensor circuit to be tested and the IAC valve to be tested and reset without performing a full 'test' programme.

EMN.3 - THROTTLE CABLE ADJUSTMENT

Before adjusting the cable, first check that the pedal end of the cable is correctly located, and that the cable is correctly routed with no sharp bends or entrapment. Do not attempt to adjust the throttle cable or idle speed by means of the stop screw on the throttle body, which should not be disturbed.

The throttle cable and associated components must be adjusted in a specific sequence to ensure full and correct throttle operation without cable strain. The procedure is detailed in sub-section JH.8 but may be summarised as follows:

- Adjust the pedal upstop for a pedal height 30mm below brake and clutch pedals.
- Adjust the ball jointed pull rod connecting to the pedal to achieve a gap of 20mm between outer cable abutment and multiplier lever pivotting link.
- Adjust the locknuts at the engine end of the outer cable to allow a small amount of free play to accommodate temperature change effects.
- Adjust the pedal downstop so that full travel of the throttle butterfly can just be achieved without allowing the cable to be strained.

EMN.4 - ELECTRONIC CONTROL MODULE (ECM)

The ECM is an electronic processor mounted on a panel either at the left hand side of the rear luggage compartment (pre 'bootbox') or at the rear of the engine compartment (with 'bootbox'). The immobilisation feature of the vehicle security system results in the ECMs for engine management and security being match coded, such that the engine module must recognise a coded signal from the security module before the unit becomes operative.

The engine ECM is an adaptive unit which 'learns' the optimum setting of the idle air control valve, and the fuelling offset required to achieve the correct exhaust oxygen content for a particular engine relative to its wear and performance characteristics. This feature speeds the response of the system, and minimises the time spent adjusting to changed operating conditions.

A summary of the sensors supplying inputs to the ECM, and the components to which the ECM supplies output control, follows:

Inputs
Crankshaft position
Manifold absolute pressure
Engine coolant temperature
Intake air temperature
Exhaust oxygen content
Throttle position
Camshaft position (VVC)
Oil temperature (VVC)
Diagnostic input
Battery supply
Starter signal
Earth supply
Vehicle security signal

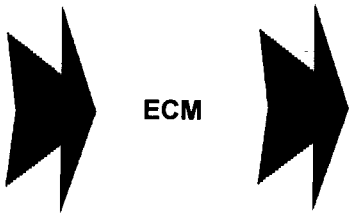

Outputs
Ignition coil
Fuel injectors
Idle air control valve
Fuel pump relay
Diagnostic connector
Oxygen sensor heater relay
VVC control solenoids
Main relay
Radiator cooling fans

Note that the ECM on 'bootbox' cars built between September '98 and February '00 was originally mounted on the front side of the composite bootbox. In order to improve electromagnetic shielding, a steel mounting plate was introduced to secure and earth the ECM directly to the rear subframe. All such cars should be retrofitted with this steel mounting bracket.

If a replacement engine ECM is fitted (or security 5AS module), the Lotus Check tool must be used to match the engine management and security modules. VVC models may use the MEMS 2J card for this operation (see EMN.2), whereas standard cars must use the security 5AS card and the password system (see section MN.2.

Before removing an ECM, first disconnect the battery earth lead before pressing the retaining barb and unplugging the harness connector(s). On standard cars, the MAP sensor is contained within the ECM body, with the sensor hose connecting to a spigot on the underside of the unit. On pre 'boot box' cars, release the three screws securing the ECM to the side panel, and withdraw the unit. On post Sept. '98 'bootbox' cars, the ECM is mounted at the rear of the engine bay, standard modules fixed to the bootbox front wall, and VVC module using a steel mounting bracket. To release the VVC module, undo the clamp top bolt, the second ECM top fixing, and lift out the ECM.

Early type mounting in luggage bay

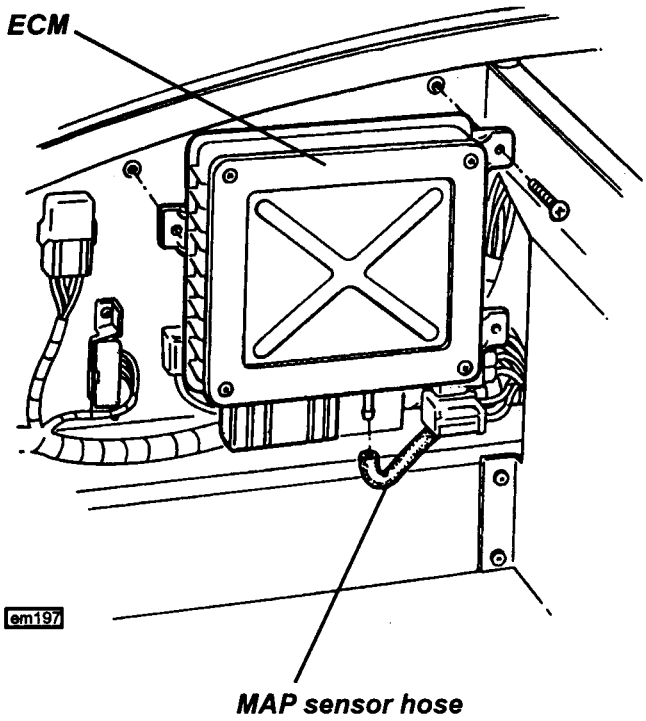

VVC type

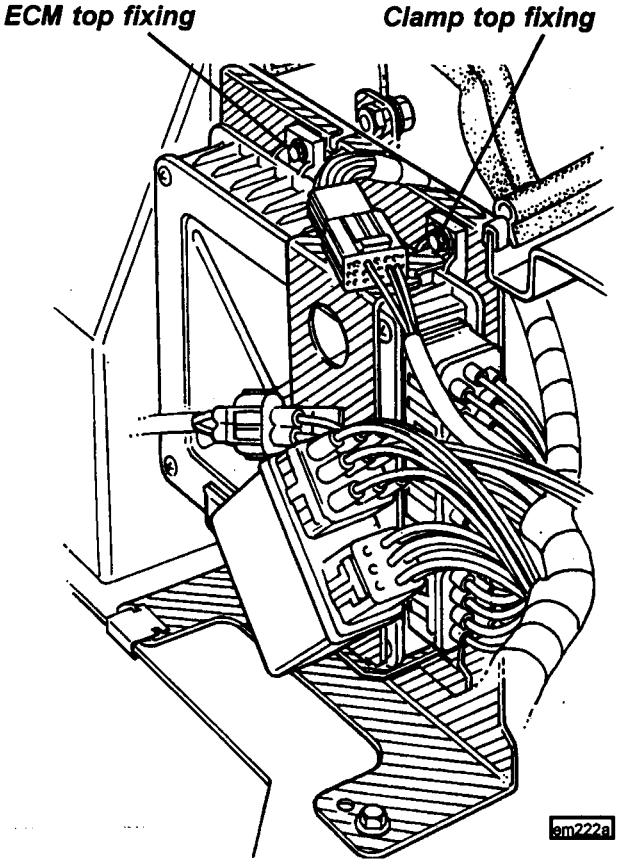

EMN.5 - RELAY MODULE

The MEMS relay module is single unit serviced only as one component. The unit incorportates the following relays:

- **Main Relay;** Supplies current to the ECM when the ignition is switched on. When the ignition is switched off, the ECM will keep the main relay energised for a short period whilst the IAC valve is driven to its power down position, ready for the next engine start.
- **Fuel Pump Relay;** Energised by the ECM for a 3 second period each time the ignition is switched on. Continuously fed during engine cranking and while the engine is running.
- **Starter Relay;** Energised by the cranking output from the ignition switch. Supplies current to the starter motor solenoid.
- **Oxygen Sensor Heater Relay;** Energised by the ECM to supply current to the oxygen sensor heating element.

The unit is mounted adjacent to the engine management ECM, either at the left hand side of the rear luggage compartment on pre 'bootbox' cars, or, on later cars, at the rear of the engine bay on a tongue fixed to the rear subframe.

If any of the above functions are faulty, the relay module should be replaced: Pull the module off its mounting tongue, and release the two harness connector blocks (press the retaining clips). On re-assembly, ensure the connector blocks are fully engaged by the retaining clips.

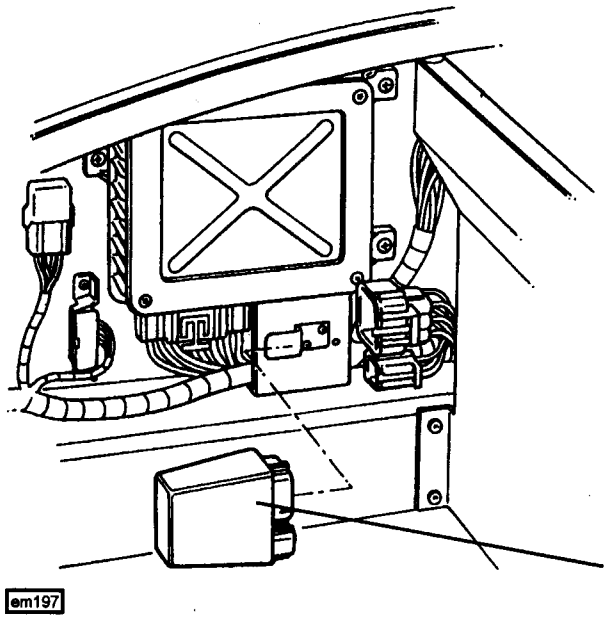

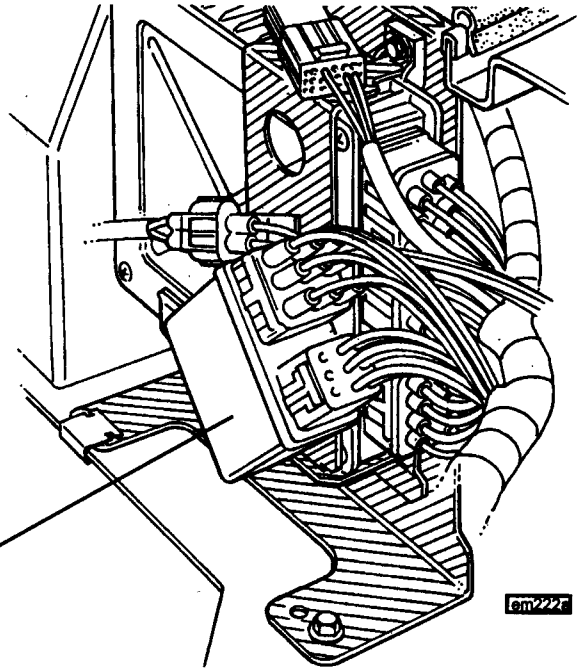

MN.6 - MANIFOLD ABSOLUTE PRESSURE (MAP) SENSOR

The MAP signal is fundamental to the calculation of air consumption and fuel calibration. The ECM provides a 5 volt supply and earth path to the sensor, which returns a voltage representing the manifold pressure.

On standard engines, the MAP sensor is contained within the ECM and receives a signal from the intake plenum ahead of no.1 cylinder intake tract, via a small bore rubber vacuum hose. A liquid trap is incorporated into this line and is mounted on the right hand side of the engine bay aperture. Faults with the MAP sensor require that the ECM be replaced.

When using the 'Lotus Check' tool, an atmospheric pressure of approximately 100 KPa should be displayed with the engine stopped, and a lower value between 25 - 40 KPa during idle. Very high values may indicate a faulty sensor, or a blocked or leaking connecting hose. Moderately raised values indicate a possible engine fault.

On VVC engined cars, the MAP sensor is mounted directly onto the front end of the intake plenum, and by avoiding the damping effect of a connecting hose, is able to respond more quickly to changes in plenum pressure. When replacing the sensor, renew the 'O' ring and tighten the two fixing screws to 9 Nm.

Standard cars:
MAP sensor line liquid trap

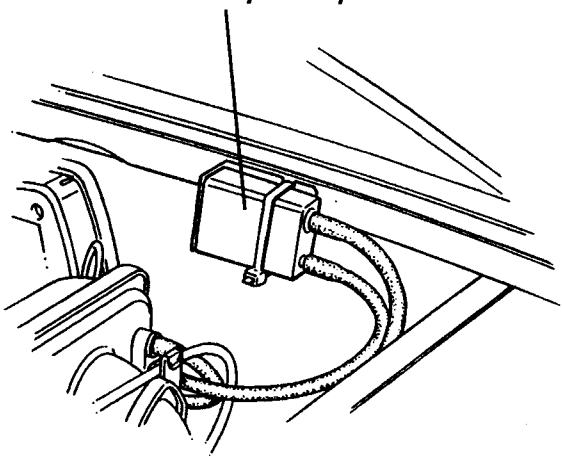

VVC cars:
MAP sensor

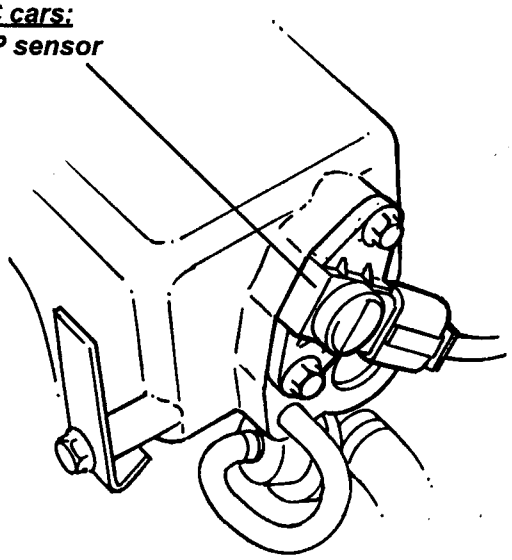

EMN.7 - CRANKSHAFT POSITION SENSOR

The signals provided by the crankshaft position sensor enable the ECM to determine:

- engine speed;
- crankshaft position.

The inductive type sensor is mounted by a single fixing into a flange at the right hand rear of the cylinder block, where it protrudes towards reluctor ring machined into the front face of the flywheel.

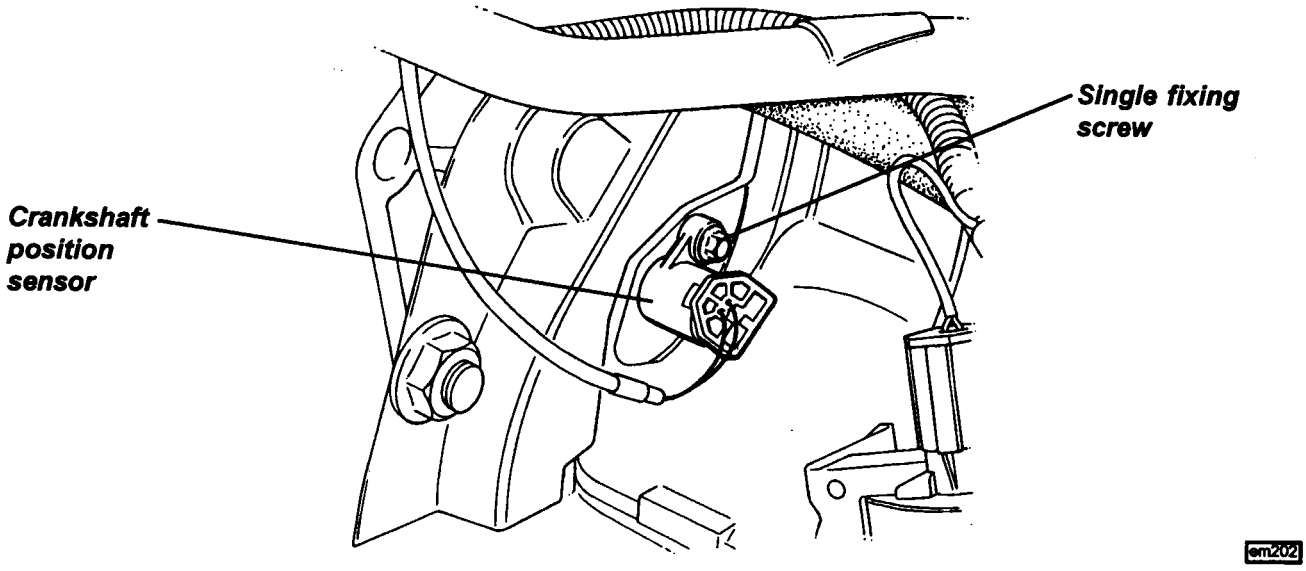

The reluctor ring has raised poles at 10° intervals which pass within an air gap of the sensor tip, and provide a voltage pulsing reference signal used for engine speed calculation. Four missing poles enable the ECM to determine the crankshaft position in order to correctly time the ignition and fuel injection sequence. Missing poles are positioned as follows, relative to no.1 cylinder:

Standard	***VVC***
TDC;	110° BTDC;
50° BTDC;	150° BTDC;
180° BTDC;	300° BTDC;
240° BTDC.	330° BTDC.

Note that on standard engines using grouped injection (1 with 4; 2 with 3), it is not necessary to determine which cylinders are on the firing, and which on the exhaust stroke. On the VVC engine, using fully sequential injection, an additional signal from the camshaft position sensor is required to determine the correct injection and ignition sequence.

To prevent damage from engine overspeed on acceleration, the ECM will implement fuel cut-off at engine speeds above approximately 7,000 rpm by inhibiting the earth path for the injectors. Fuel is progressively reinstated as engine speed falls.

Faults in the crankshaft sensor or circuit may be indicated on the scanner tool by a '0' display during cranking. On standard engines, sensor pin no.1 connects to ECM terminal 32 and sensor pin 2 to ECM terminal 31. Sensor resistance is 1.3 kohms. Fixing screw torque = 6 Nm.

EMN.8 - ENGINE COOLANT TEMPERATURE (ECT) SENSOR

The ECM requires a coolant temperature input signal in order to increase fuel delivery and maintain driveability during the cold running and warm-up phase. The signal from this sensor is used for many different parameters within the engine management system to control and switch various components dependent on engine temperature.

The sensor is a thermistor (a resistor which changes value with temperature) mounted in the outlet junction pipe at the flywheel end front side of the engine. Note that the ECT sensor has a brown body and harness connector and is mounted horizontally. This should not be confused with the water temperature gauge sender which is fitted in the same pipe, but has a blue body and harness connector and is mounted vertically from below. Low coolant temperature produces a high resistance, whereas high temperature causes low resistance. At normal running temperature, the resistance will be approximately 300 - 400 ohms.

This data is also used to control the radiator fan, which is switched on by the ECM at a rising coolant temperature of 102°C, and switched off on falling temperature at 96°C.

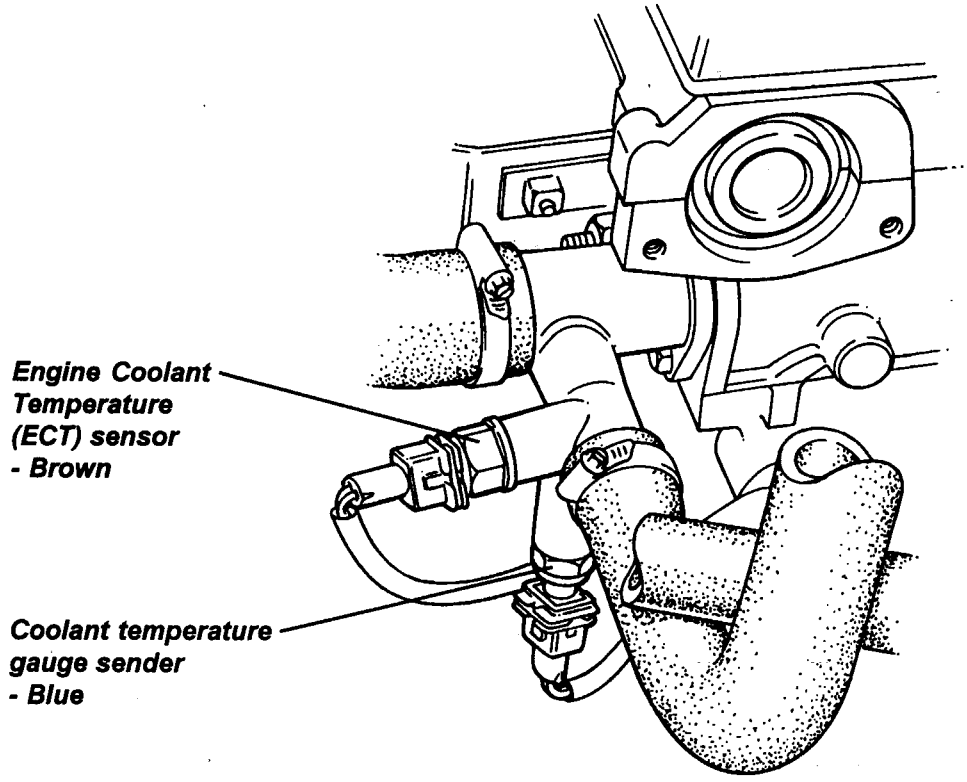

If the ECM receives a signal voltage outside of the acceptable range, a default setting equating to 60°C will be substituted, and the cooling fan energised.

To replace the sensor, disconnect the harness plug, and position a container to catch the escaping coolant when the sensor is removed. Unscrew the sensor from the junction pipe. Clean the threads of the pipe and sensor before applying Teflon tape to the sensor thread and screwing into the pipe. Tighten to 6 Nm. Refit the harness plug, and top up with coolant (see Cooling Section KF).

If the ECM detects a coolant sensor open circuit, a default value of 60°C will be substituted, and will be displayed on the 'Lotus Check' scanner tool in Live Data. Sensor faults may cause several symptoms including poor starting, fast idle speed, poor fuel consumption and cooling fans running continuously.

EMN.9 - INTAKE AIR TEMPERATURE (IAT) SENSOR

The intake air temperature (IAT) sensor is fitted into the inlet manifold tract of no.4 cylinder, and is a transducer with a negative temperature coefficient, such that its electrical resistance reduces with increasing temperature. Using this signal in conjunction with that from the MAP sensor, the ECM is able to determine the air consumption of the engine, and adjust the injector pulse width accordingly for correct fuelling. Low air temperature results in denser air requiring more fuel. High air temperatures are also used by the ECM to retard the ignition timing and avoid knock.

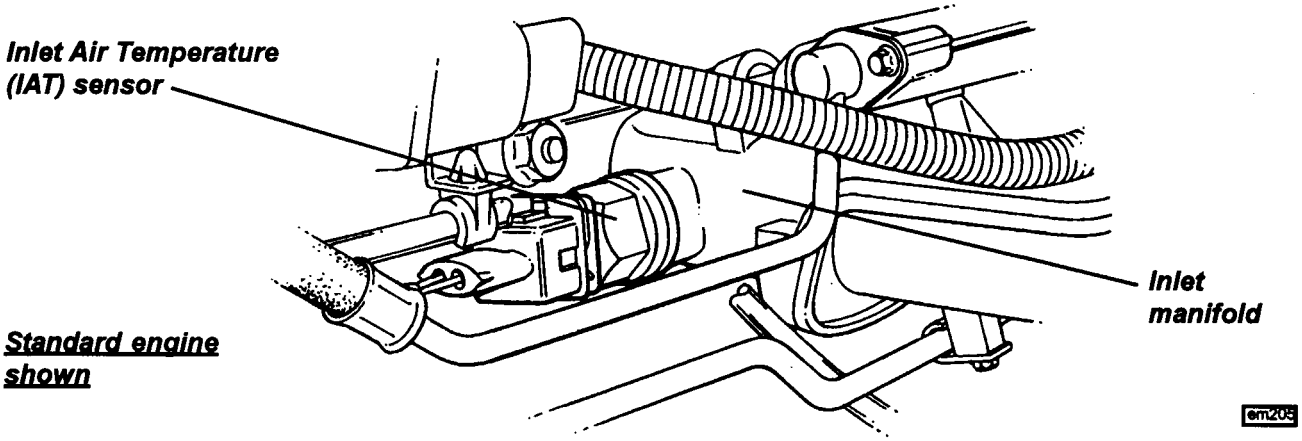

To replace the sensor, unplug the electrical connector, and unscrew the sensor from the manifold. Before fitting a sensor, clean the threads and mating face, and screw into the manifold, tightening to 7Nm. Mate the harness plug.

EMN.8 - ENGINE COOLANT TEMPERATURE (ECT) SENSOR

The ECM requires a coolant temperature input signal in order to increase fuel delivery and maintain driveability during the cold running and warm-up phase. The signal from this sensor is used for many different parameters within the engine management system to control and switch various components dependent on engine temperature.

The sensor is a thermistor (a resistor which changes value with temperature) mounted in the outlet junction pipe at the flywheel end front side of the engine. Note that the ECT sensor has a brown body and harness connector and is mounted horizontally. This should not be confused with the water temperature gauge sender which is fitted in the same pipe, but has a blue body and harness connector and is mounted vertically from below. Low coolant temperature produces a high resistance, whereas high temperature causes low resistance. At normal running temperature, the resistance will be approximately 300 - 400 ohms.

This data is also used to control the radiator fan, which is switched on by the ECM at a rising coolant temperature of 102°C, and switched off on falling temperature at 96°C.

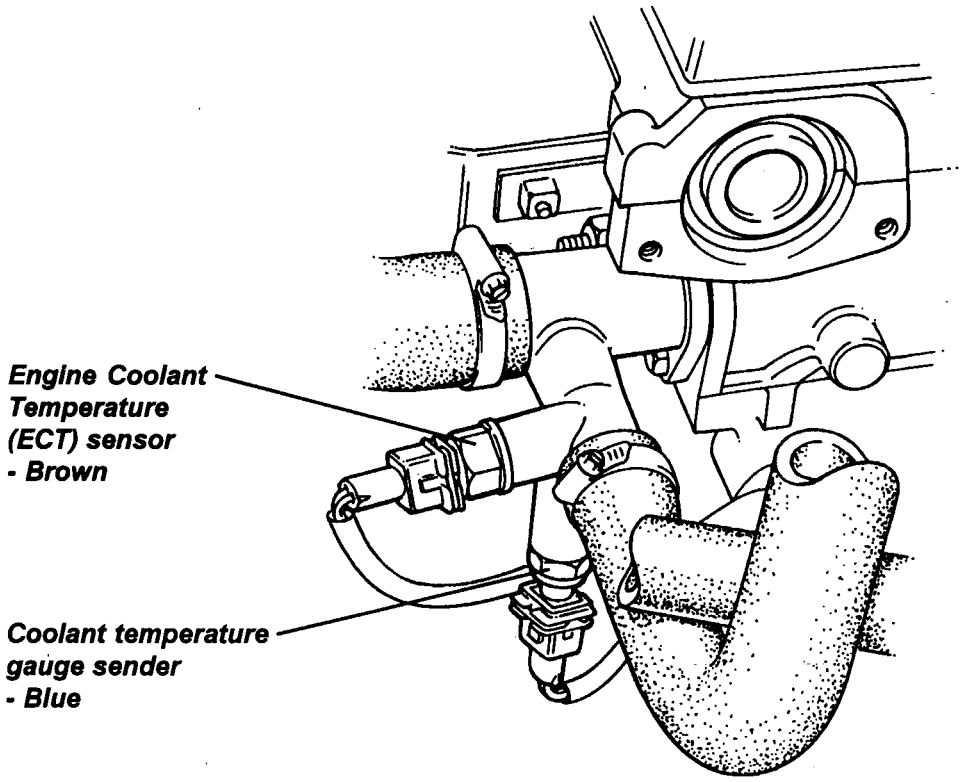

If the ECM receives a signal voltage outside of the acceptable range, a default setting equating to 60°C will be substituted, and the cooling fan energised.

To replace the sensor, disconnect the harness plug, and position a container to catch the escaping coolant when the sensor is removed. Unscrew the sensor from the junction pipe. Clean the threads of the pipe and sensor before applying Teflon tape to the sensor thread and screwing into the pipe. Tighten to 6 Nm. Refit the harness plug, and top up with coolant (see Cooling Section KF).

If the ECM detects a coolant sensor open circuit, a default value of 60°C will be substituted, and will be displayed on the 'Lotus Check' scanner tool in Live Data. Sensor faults may cause several symptoms including poor starting, fast idle speed, poor fuel consumption and cooling fans running continuously.

EMN.9 - INTAKE AIR TEMPERATURE (IAT) SENSOR

The intake air temperature (IAT) sensor is fitted into the inlet manifold tract of no.4 cylinder, and is a transducer with a negative temperature coefficient, such that its electrical resistance reduces with increasing temperature. Using this signal in conjunction with that from the MAP sensor, the ECM is able to determine the air consumption of the engine, and adjust the injector pulse width accordingly for correct fuelling. Low air temperature results in denser air requiring more fuel. High air temperatures are also used by the ECM to retard the ignition timing and avoid knock.

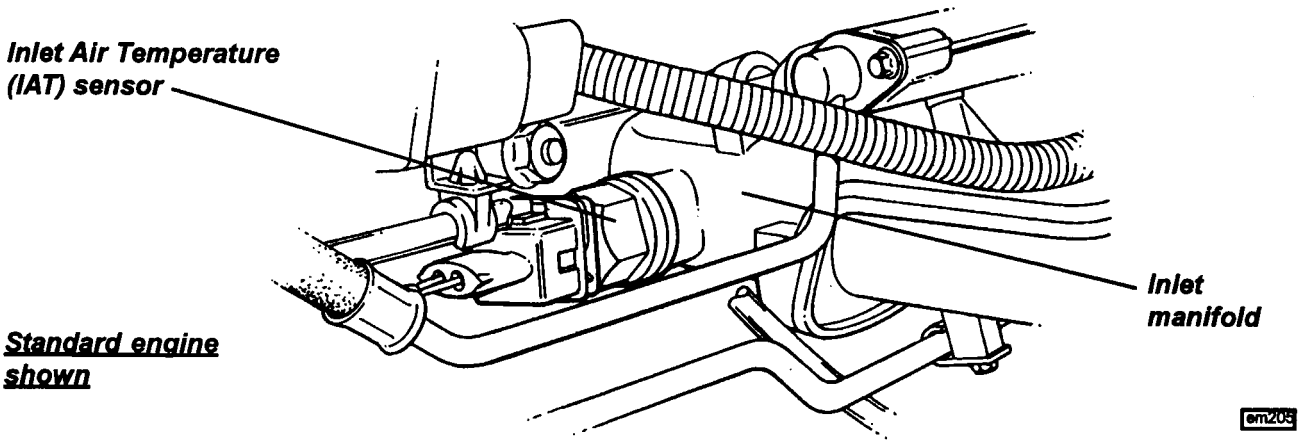

To replace the sensor, unplug the electrical connector, and unscrew the sensor from the manifold. Before fitting a sensor, clean the threads and mating face, and screw into the manifold, tightening to 7Nm. Mate the harness plug.

EMN.10 - THROTTLE POSITION (TP) SENSOR

The throttle position (TP) sensor is a potentiometer fitted directly to the end of the throttle spindle, and provides the ECM with information on both throttle opening, and rate of change of throttle opening. For example, when a fully closed throttle and appropriate engine speed is signalled, the ECM activates the idle air control valve to regulate idle speed; a rapid or sudden opening of the throttle will initiate fuel enrichment for acceleration; and a closed throttle overrun condition will prompt fuel cut-off.

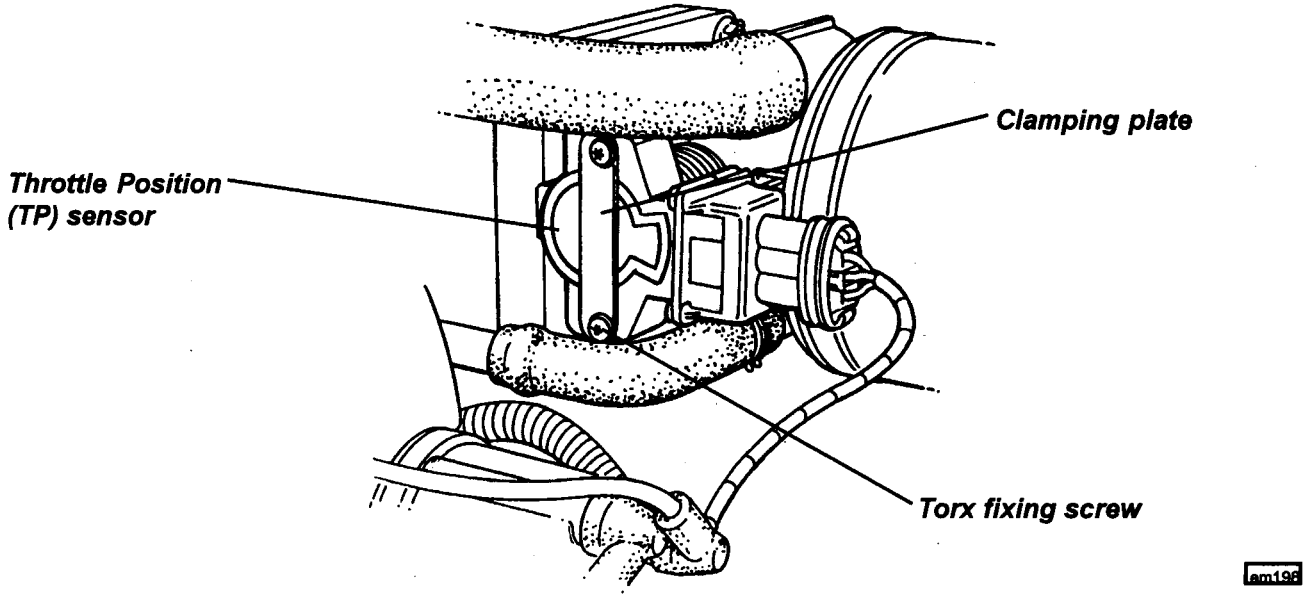

The ECM provides the sensor with a 5 volt supply, and monitors the returning signal, which is proportional to throttle opening, on an earth line.

Acceleration enrichment: When the throttle pedal is depressed, the ECM receives a rising voltage from the TP sensor and detects a rise in manifold pressure from the MAP sensor. The ECM provides additional fuel by increasing the normal injector pulse width and also provides a small munmer of extra pulses on rapid throttle openings.

Over-run fuel cut-off: The ECM implements over-run fuel cut-off when the engine speed is above 2000 rpm with engine at normal operating temperature and the throttle position sensor in the closed position, i.e. the vehicle is coasting with the throttle released. The ECM indexes the idle air control valve open slightly to increase the air flow through the engine to maintain a constant manifold depression and keep emissions low. Fuel is progressively reinstated as the throttle position sensor is opened.

When using the 'Lotus Check' scanner tool, 'Throttle Bits' shows the raw signal received by the ECM from the TP sensor, and will range from 0 (closed) to 255 (fully open). The full range of values will not be seen in practice. 'Throttle Switch' indicates whether the ECM detects an open or closed throttle. If the display reads 'ON' when the throttle is closed, the engine will not idle correctly, and the closed throttle position may need to be reset. Run a 'TUNE' or 'TEST' programme to reset.

To remove the sensor, unplug the harness connector and remove and discard the two Torx screws securing the sensor. Remove the clamping plate and withdraw the sensor from the throttle spindle.

To fit the sensor:

- Clean the mating faces of sensor and throttle body, and align the flat of the sensor with the machined flat on the throttle spindle.
  CAUTION: The TP sensor can be easily damaged if carelessly fitted. When pressing the sensor onto the spindle, use only finger pressure on the centre of the sensor. Do not use the securing screws to pull the sensor into position.
- Press the sensor into position and rotate counterclockwise to align the fixing holes.
  CAUTION: Do not rotate the sensor in a clockwise direction, and ensure it is not rotated beyond its internal stops.
- Fit the clamping plate and tighten two new Torx screws. Mate the harness connector plug.
- Operate the throttle and check that full travel of the throttle spindle, from fully closed to fully open, is achieved.

EMN.11 - IDLE AIR CONTROL (IAC) VALVE

The idle air control (IAC) valve is mounted on the intake plenum, and controls an air passage which by-passes the throttle valve. When the pintle of the valve is fully extended, the passage is closed off for a minimum idle speed, but as the ECM commands the IAC stepper motor to withdraw the pintle, a progressively greater amount of air is allowed to by-pass the throttle. In this way, the ECM is able to control engine idle speed independently of the throttle butterfly.

NOTE: The closed setting of the throttle valve is preset during manufacture, and must NOT be adjusted.

During cold starts, the IAC is opened to provide a raised idle speed, dependent on coolant temperature, with a gradual decay as the engine warms to normal operating temperature. The ECM also uses the fast response of ignition timing variation to maintain idle stabilisation, such that at idle, the ignition timing will be constantly changing. When loads are placed onto or removed from the engine, the ECM senses the change in engine speed and uses both ignition timing and IAC position to control idle speed.

The position of the idle air control valve should be within the range of 20 to 40 steps (as displayed by a 'Lotus Check' scanner) when the engine is idling at normal engine temperature. This ensures that the idle ari control valve is able to supply varying amounts of by-pass air to compensate for all loads and temperature conditions. If outside of this range, there is likely to be a mechanical fault, such as an intake manifold air leak.

Using the 'Lotus Check' scanner, 'IDLE HOTDBPOS' indicates the number of IAC valve steps from fully closed (0) which the ECM has learned as the position required to maintain the specified hot idle speed. 'STEPS' shows the position of the IAC valve as calculated by the ECM based on the steps moved since the last ignition switch off. This value will normally be changing during idle as the ECM continuously monitors idle speed. When the ignition is switched off, the ECM will keep the main relay energised for a short period whilst the IAC valve is driven to its power down position, ready for the next engine start.

The IAC valve position may be reset using the 'Lotus Check' tool, or, with the ignition on and mobilised, by pressing the throttle fully and slowly 5 times.

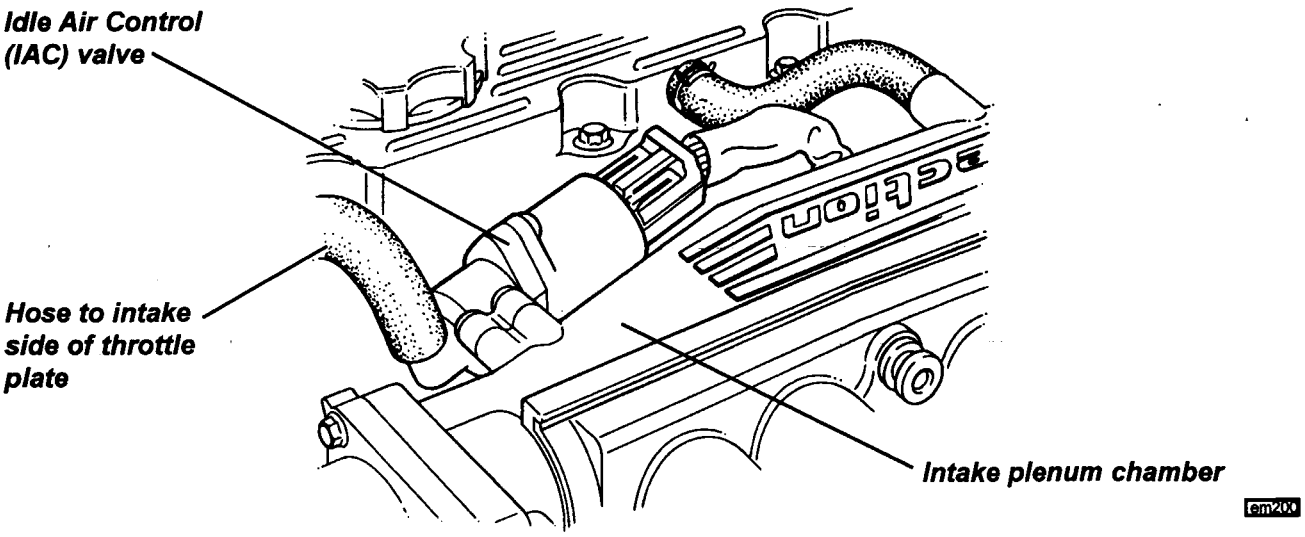

To remove the valve, unplug the harness connector and remove the two Torx screws securing the valve body to the plenum adaptor. Withdraw the valve and discard the 'O' ring.

To fit the valve:

- Ensure the mating faces of the plenum adaptor and valve are clean.
- Lubricate a new 'O' ring with silicone grease, and fit to the valve.
- Fit the valve into the adaptor, and tighten the two Torx screws to 1.5 Nm.
- Mate the electrical connector plug.

EMN.12 - OXYGEN (O_2) SENSOR

The MEMS system operates a 'closed loop' fuel control system whereby the output signal from an oxygen sensor in the exhaust system is monitored by the ECM, which constantly adjusts the air/fuel ratio to that providing the most efficient conversion of gases by the catalyst. A lean air/fuel ratio causes a high exhaust oxygen content, which reduces the sensor output voltage to the ECM. The air/fuel ratio is then adjusted to be richer, resulting in reduced exhaust oxygen and a higher sensor output voltage. In this way the mixture strength constantly sways either side of the ideal setting.

The sensor is equipped with an integral heating element to ensure that it reaches operating temperature soon after a cold start. The heater element supply is controlled by the ECM via a relay in the relay module.

Using the 'Lotus Check' tool, 'O2 VOLTAGE' shows the voltage across the sensor as read by the ECM. Once the engine is fully warm, and during most idle and driving conditions, this voltage will switch rapidly between 0.7 V - 1.0 V. The 'FEEDBACK' display indicates the current feedback fuelling correction. This is shown as a percentage of the mapped (open loop) value. This percentage is continuously updated by the ECM whenever the conditions for closed loop fuelling are present. At other times, the feedback value will show 100% indicating that the system is running open loop. High values of feedback (e.g. 120%) indicate that feedback is attempting to compensage for fuelling being too lean, and low values (e.g. 80%) for fuelling being too rich. Note: misfire conditions will be shown as high values as feedback will be fooled into compensating for a system running too lean.

The sensor is mounted on the inner side of the exhaust manifold just upstream of the downpipe flange. To remove the sensor, unplug and free the electrical connector, and use a 22 mm crows foot spanner to release the sensor from the manifold. Fit a new sealing washer to the sensor before tightening to 55 Nm and mating the electrical connector plug.

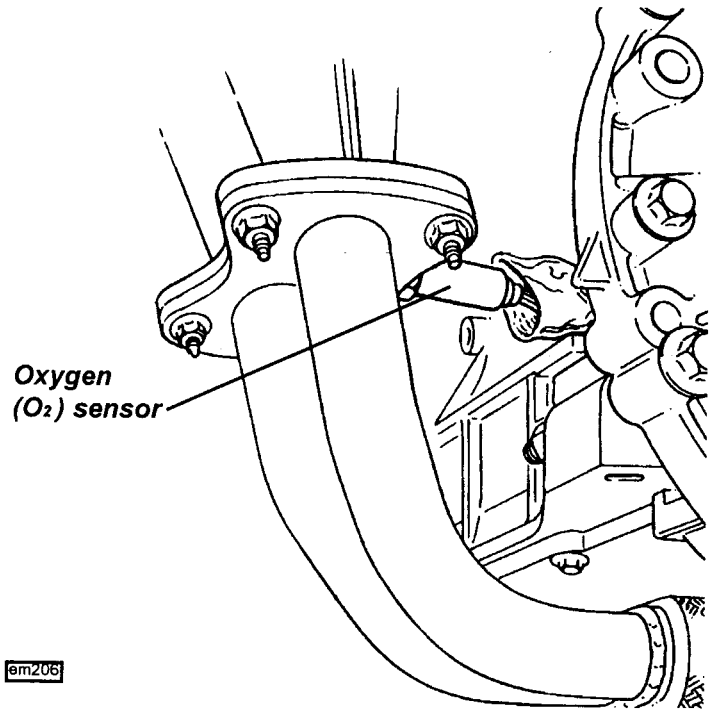

EMN.13 - CAMSHAFT POSITION SENSOR (VVC versions only)

The camshaft position sensor has two functions: i) to provide an engine position reference for the sequential injection; ii) to measure the actual inlet cam period as controlled by the VVC mechanism. The inductive type sensor is mounted on the right hand side of the cylinder head and projects into the cam housing to be in close proximity to a toothed reluctor on the inlet camshaft of no. 2 cylinder.

By interpreting the signals received, the ECM is able to distinguish firing TDC from exhaust TDC, and initiate the injection sequence on engine start. If, however, the sensor should fail before engine start, the engine will start and continue to run in grouped fuelling mode (injectors activated in pairs) with a reduced rev. limit of approx. 5,600 rpm applied to protect the engine from potential damage. If sensor failure occurs whilst the engine is running, the engine will continue to run in sequential fuelling mode until ignition switch off.

If the ECM detects any faults with cam period measurement during start up and initial running, the ECM will try and drive (dependent on the cause of the fault) the mechanism to minimum cam period. Engine speed will be limited to approx. 5,600 rpm, and the idle speed will be raised. If the ECM loses the cam priod signal during running, the cam period will remain frozen at the last valid period. Engine speed may be limited as low as 5500 rpm depending on cam period when the fault occured. The idle speed will be raised for the rest of the journey. Note that a cam period measurement fault will only be recorded by the ECM if the fault is detected at start-up or during initial running.

When refitting or replacing a cam angle sensor, use a new 'O' ring, and tighten the fixing screw to 6 Nm.

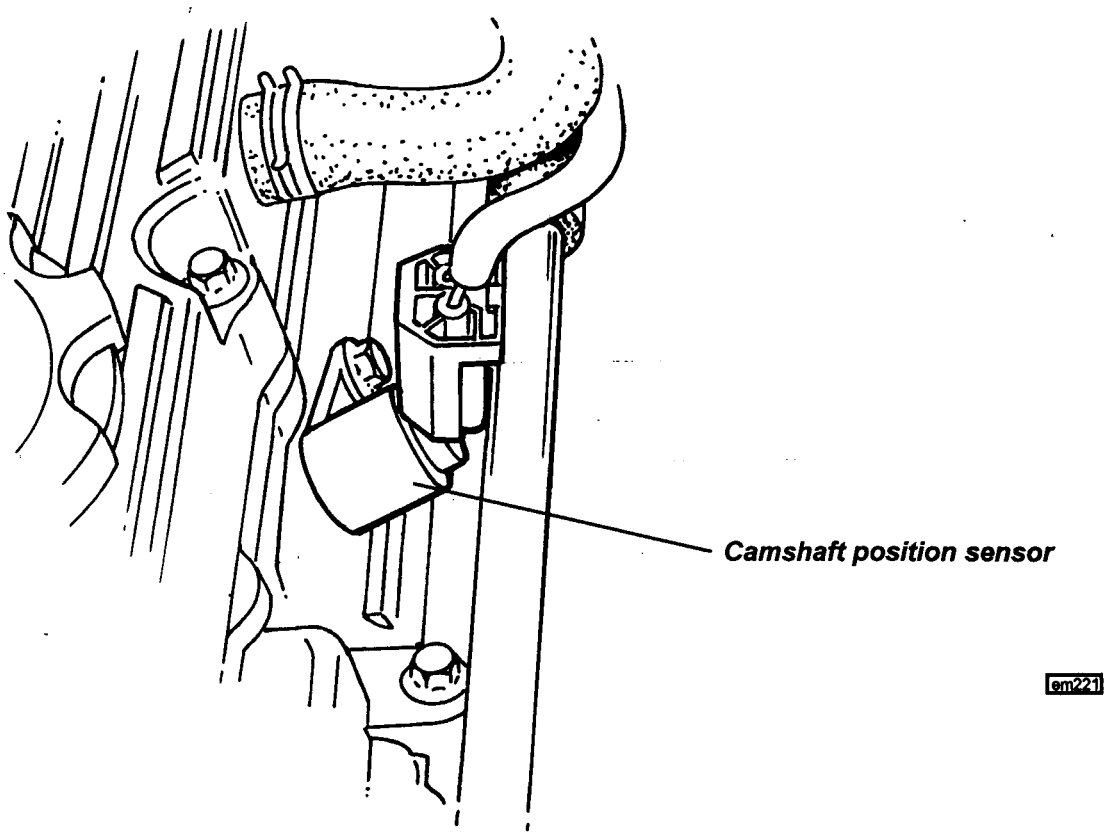

EMN.14 - VVC MECHANISM CONTROL SOLENOIDS

The inlet cam period is determined by a hydraulic control unit (HCU) mounted on the right hand front of the cylinder head. The HCU uses two solenoids to operate a spool valve and control a piston and rack mechanism, which outputs from the HCU via a control shaft to the two VVC mechanisms. The ECM energises one solenoid valve at a time to drive the VVC mechanism either towards maximum, or towards minimum inlet cam period. The desired period is calculated by the ECM primarily using engine speed and MAP signals, with the current period measured by the cam position sensor.

To replace the solenoids:

- Unplug the harness connectors;
- Release the adjacent breather pipes and harnesses to provide access to the sleeve nut;
- Remove the nut and slide the two solenoids off the spool valve shaft, taking care not to misplace the 'O' rings and spacer.

When refitting, lubricate all 'O' rings and spool valve shaft with engine oil, and note that although the two solenoids are identical, the correct harness plug must be connected to each; black to RH solenoid, blue to LH solenoid. Assemble onto the spool valve shaft in the following order:

- 'O' ring;
- One solenoid with lettering on end surface facing away from HCU;
- Spacer with 'O' ring fitted;
- Second solenoid with lettering on end surface facing away from HCU;
- End nut with 'O' ring fitted;
- Position solenoids to allow connector plugs to be fitted before tightening nut to 12 Nm.

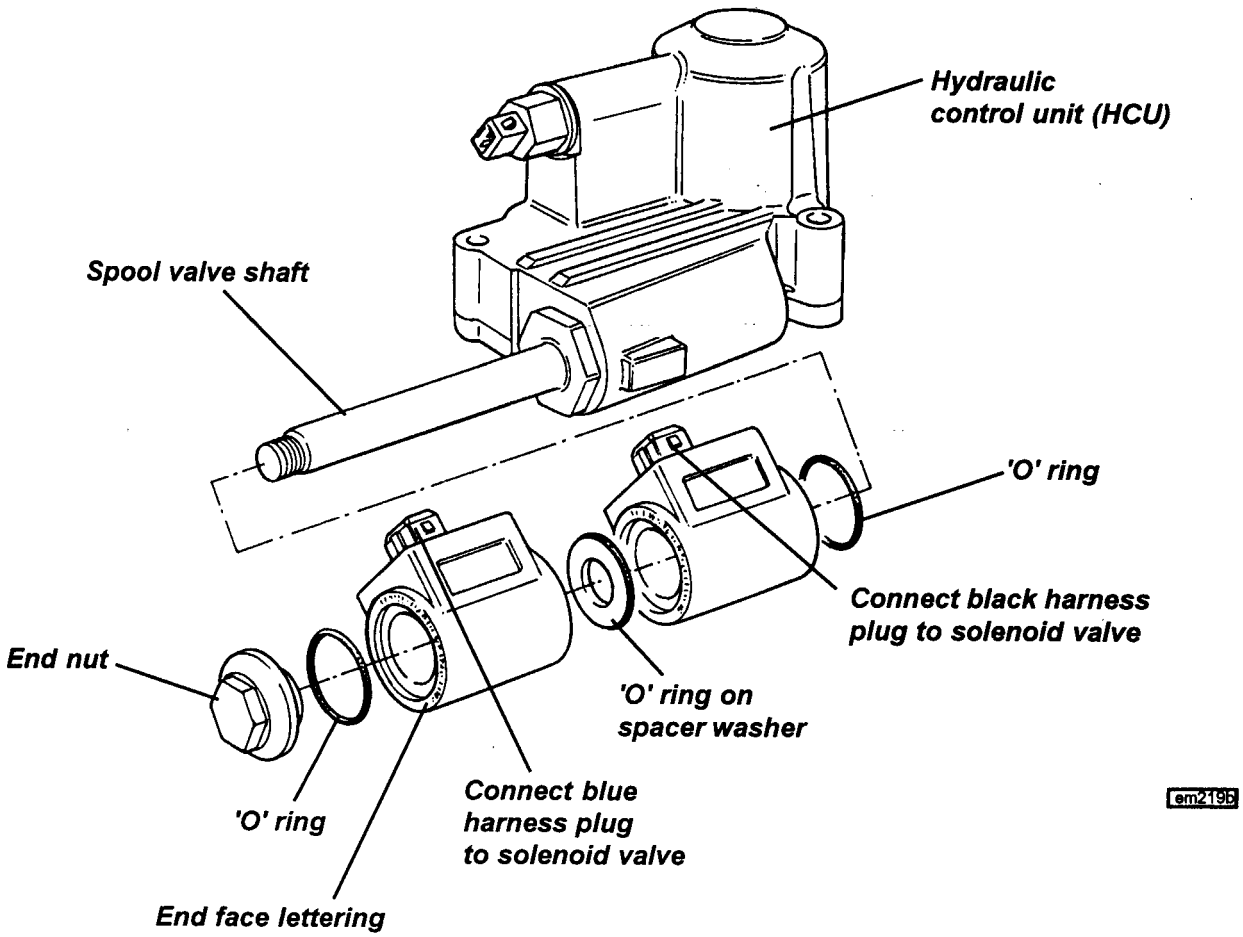

EMN.15 - OIL TEMPERATURE SENSOR

An oil temperature sensor is mounted in the top of the VVC hydraulic control unit. The oil temperature is used by the ECM to determine how quickly the VVC mechanism will respond to cam period change commands.

To replace the sensor, unplug the electrical connector (brown), and unscrew from the hydraulic control unit. Fit a new seal onto the sensor before inserting and tightening to 15 Nm.

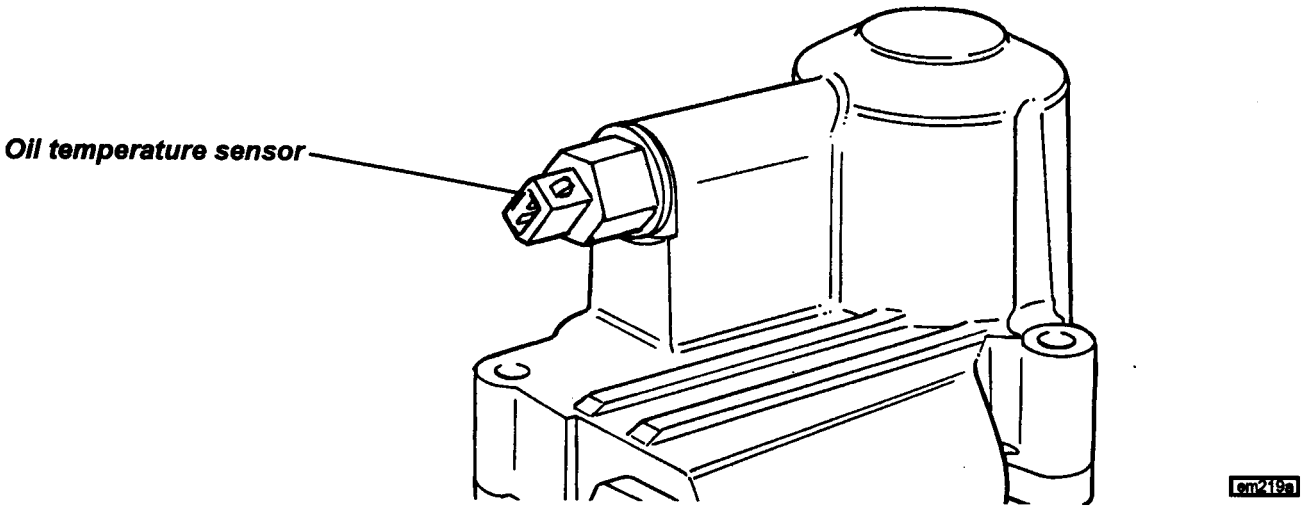

EMN.16 - FUEL SYSTEM

The fuel system is a high pressure recirculating type, using an 'in tank' submerged 3-stage impeller pump, an in line canister filter, a common fuel rail supplying all four injectors, and a fuel pressure regulating valve controlling the return line to the tank.

WARNING: The fuel line between pump and injector rail, and the injector rail itself, contain pressurised fuel both when the engine is running, and after switching off. This feature aids engine starting by reducing the time needed to build up operating fuel pressure, and inhibiting the formation of vapour pockets in the supply line of a stopped hot engine.

i) To minimise the risk of fire and personal injury, relieve the fuel system pressure before servicing the fuel rail or any related component. See 'Fuel Pressure Relief Procedure' below.
ii) To reduce the possibility of sparks occurring when a fuel line is disconnected, or when fuel vapour is present, the negative battery cable should be disconnected before work is commenced.
iii) When fuel lines are disconnected, absorb any escaping fuel in an absorbent cloth and dispose of safely.

Fuel Pressure Relief Procedure

This procedure should be used prior to disconnecting any part of the fuel line except the unpressurised return line.

Pre-'boot box' cars

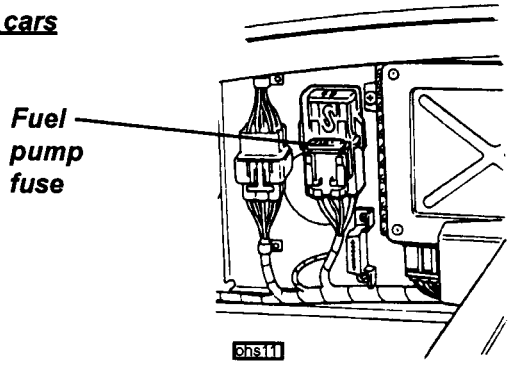

'Boot box' cars

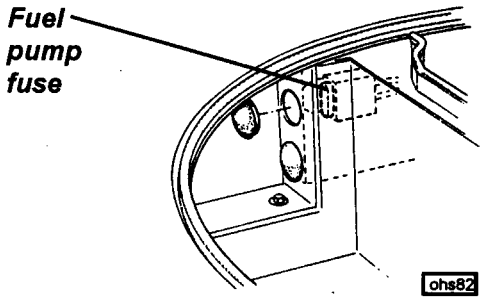

- Pull out the fuel pump 20A fuse (see above), start the engine, and run until it stops from starvation. Crank the engine for a further 10 seconds.
- If the engine is a non-runner, pull out the fuel pump fuse, and crank the engine for a total time of 60 seconds to minimise residual fuel pressure.
- Disconnect the battery.
- Use a shop towel to absorb the small amount of pressurised fuel remaining as a fuel feed pipe connection is released, and dispose of safely.

The modular fuel pump/sender assembly uses an electric motor to power a three stage impeller type pump system submerged within the tank. In order to avoid fuel starvation from surge effects caused by vehicle acceleration and cornering forces, the pump is housed within a reservoir canister kept filled with fuel irrespective of the tank fuel level. The pump connects with a port on the bottom of the canister fitted with a strainer sock in order to screen dirt particles from the fuel line and help separate any water content from the fuel. The first stage impeller pump draws fuel from the tank via this sock, and outputs it into the canister, which fills up to its overflow port in the top surface. The second stage impeller pump draws fuel from within the canister via another strainer sock, and supplies the high pressure third stage tubine pump which outputs fuel from the top end of the pump into the flexible pipe connected to the supply connection on the pump assembly top plate. From here, fuel is piped to the fuel rail on the engine, from which it returns to the inlet connection on the top plate and spills into the canister to supplement the primary pump output and keep the canister fully filled.

An umbrella valve in the bottom of the canister allows fuel to flow into the canister whenever the tank level is higher than the canister level. This feature also permits a continued fuel supply to the secondary pump stage in the event of a blocked primary stainer.

For further details of the fuel pump, filter and tank, refer to section LH.

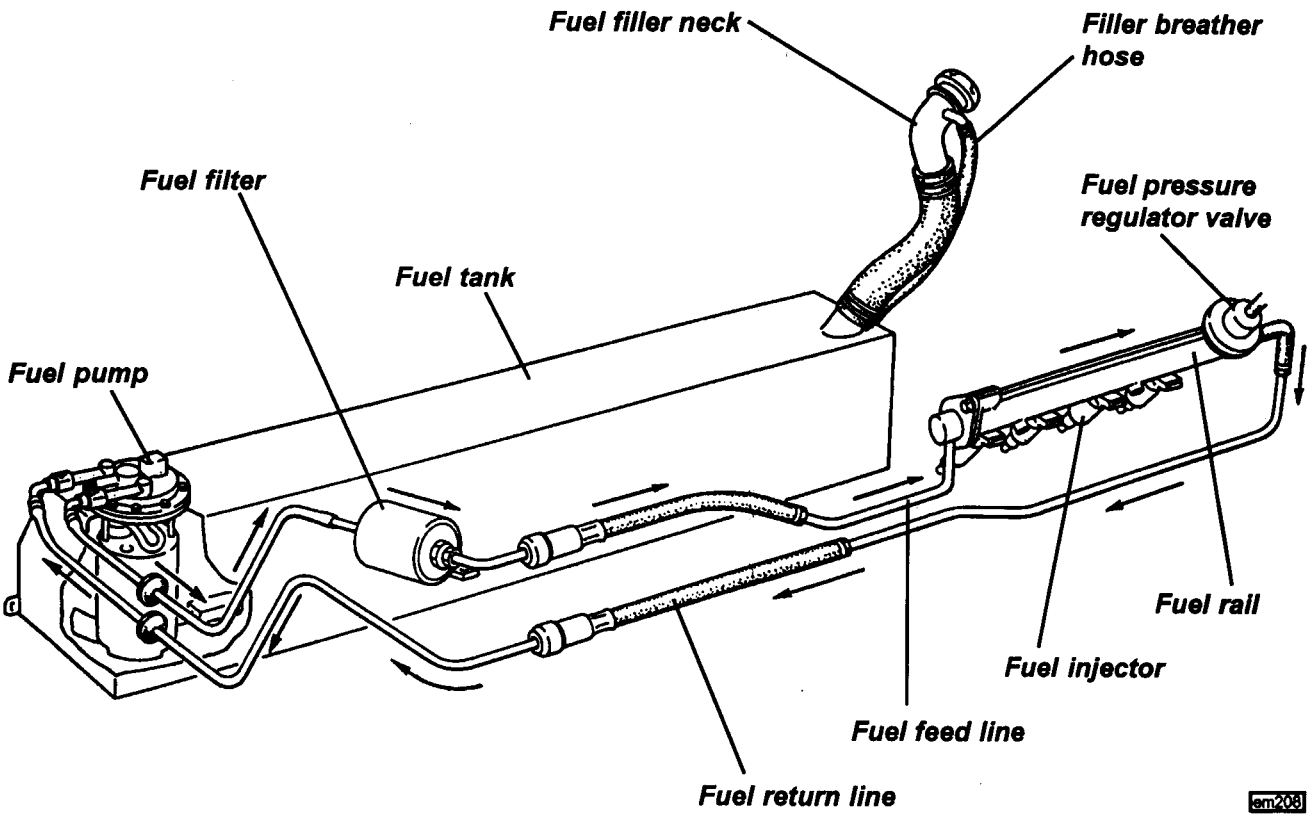

Fuel Pump Switching

The fuel pump is controlled by the ECM via the fuel pump relay located in the relay module, and is energised under the following conditions:

- When the ignition is first switched on, the ECM grounds the pump relay coil for a few seconds in order to pressurise the fuel rail, and then switches off.
- When cranking, the ECM receives an engine speed signal and operates the pump continuously.
- When the engine is running, the ECM receives an engine speed signal and operates the pump continuously.
- If the engine stalls, the ECM will switch off the pump after about 10 seconds.

- A safety inertia switch is mounted ahead of the ECM, and controls the supply to the fuel pump relay. Vehicle impact will trip the switch and isolate the fuel pump. Reset by pressing the button on top of the switch.

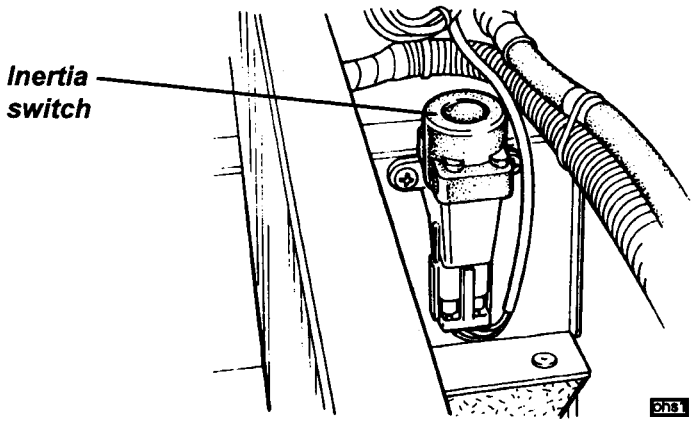

Fuel Rail and Pressure Regulator Valve - Testing

The single fuel rail is used to link the four port injectors to provide a balanced fuel supply at common pressure, and also to retain the port injectors in the inlet manifold. The left hand end of the fuel rail receives fuel from the in line filter, and the right hand end houses the pressure regulator valve, from which fuel returns to the tank. The fuel pressure regulator is a diaphragm operated relief valve with fuel pump pressure acting on one side of the diaphragm, and regulator spring pressure and intake plenum pressure on the other. The

function of the regulator is to maintain a constant pressure differential across the injectors at all times. i.e. a constant difference between fuel pressure supplied to the injector, and inlet manifold pressure at the port injector nozzle. By using an intake plenum pressure signal to supplement regulator spring pressure in the valve, the valve is able to regulate fuel supply pressure in accordance with engine load. The non-adjustable pressure regulator is factory set to approximately 3.0 bar, and is serviced as a complete assembly.

To check the fuel pressure:

i) Relieve fuel pressure as detailed above.

ii) Connect fuel pressure test gauge T000T1386 into the supply line between the fuel filter and fuel rail using adaptor T000T1387

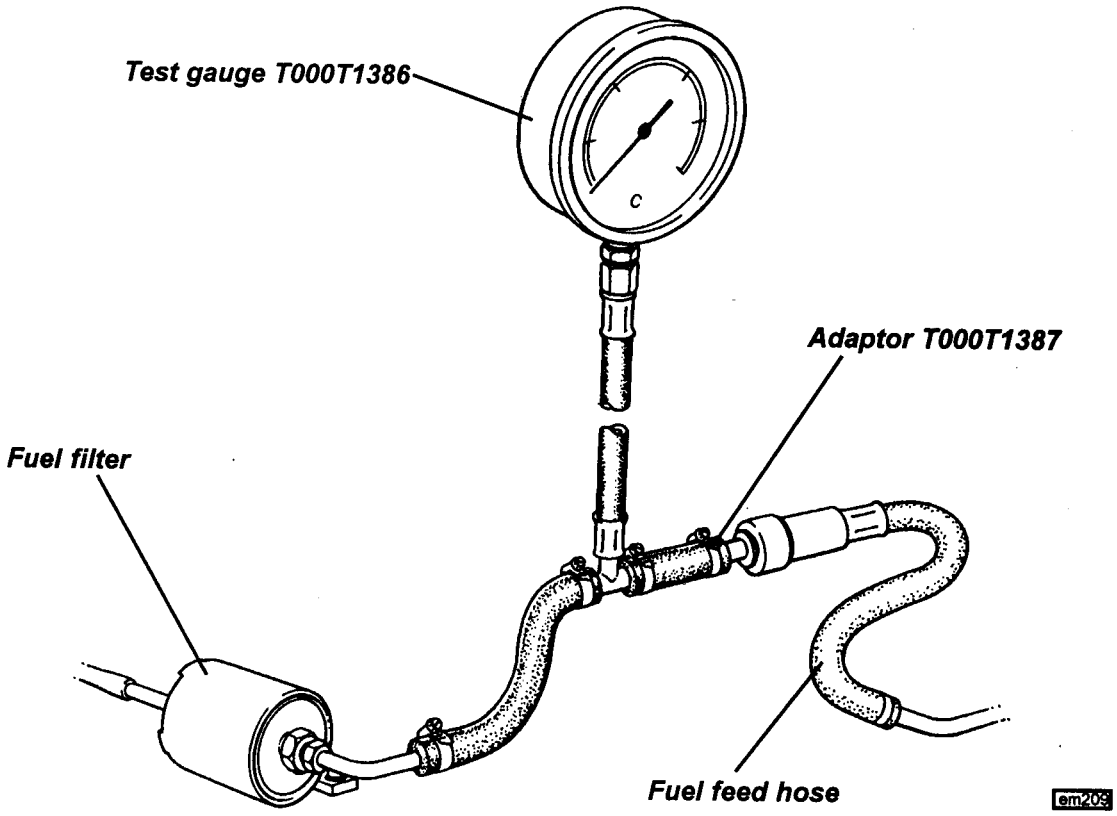

iii) Disconnect the vacuum hose between the pressure regulator and the intake plenum.

iv) With the engine idling, the pressure gauge should read 2.9 - 3.1 bar.
If below specification, progressively restrict the fuel return line between regulator valve and tank.
- If the specification can then be achieved, the regulator valve is faulty;
- If this makes little or no difference, the fuel pump may be restricted or faulty.

If above specification, the regulator valve may be faulty.

v) With the engine still idling, re-connect the vacuum hose to the regulator valve. The pressure should drop to approximately 2.2 bar.
- If the pressure does not drop, check the hose for kinking or blockage, or replace the regulator valve.

vi) Switch off the ignition and observe the pressure drop after one minute. Pressure should not drop by more than 0.7 bar.
- Too great a pressure drop may be caused by (a) faulty regulator valve; (b) faulty non-return valve in the fuel pump; (c) leaking injector
- If clamping off the return hose reduces the pressure drop, a faulty regulator valve is indicated.
- If clamping off the supply hose reduces the pressure drop, a faulty fuel pump is indicated.
- If clamping off both hoses does not reduce the pressure drop, a leaking injector is indicated.

vii) To check that the pump has sufficient reserves of delivery for full demand conditions, progressively clamp off the return hose with the pump running. The pressure should increase by approximately 2 bar.

CAUTION: Only clamp the return hose momentarily and observe the gauge to ensure pressure does not exceed gauge capacity.

Push Fit Connectors

The fuel rail feed and return hoses are equipped with push fit connectors to allow easy powertrain removal. The feed line connector is colour coded orange, and the return line connector green. Note that the feed line should not be opened without first carrying out the fuel pressure relief procedure detailed above. With the system depressurised, cut the safety tie wrap from the connector collar, and use an absorbent cloth to collect fuel draining from the pipe before pressing the collar into the connector, and separating the joint.

Clean the pipe spigot and lubricate with a light spray of WD40 or similar before remaking the joint, pressing firmly together until full engagement is indicated be an audible 'click'. Check security by pulling and twisting the joint. To guard against any possibility of accidental release, fit a small tie wrap (A075W6038Z) around the release collar as shown.

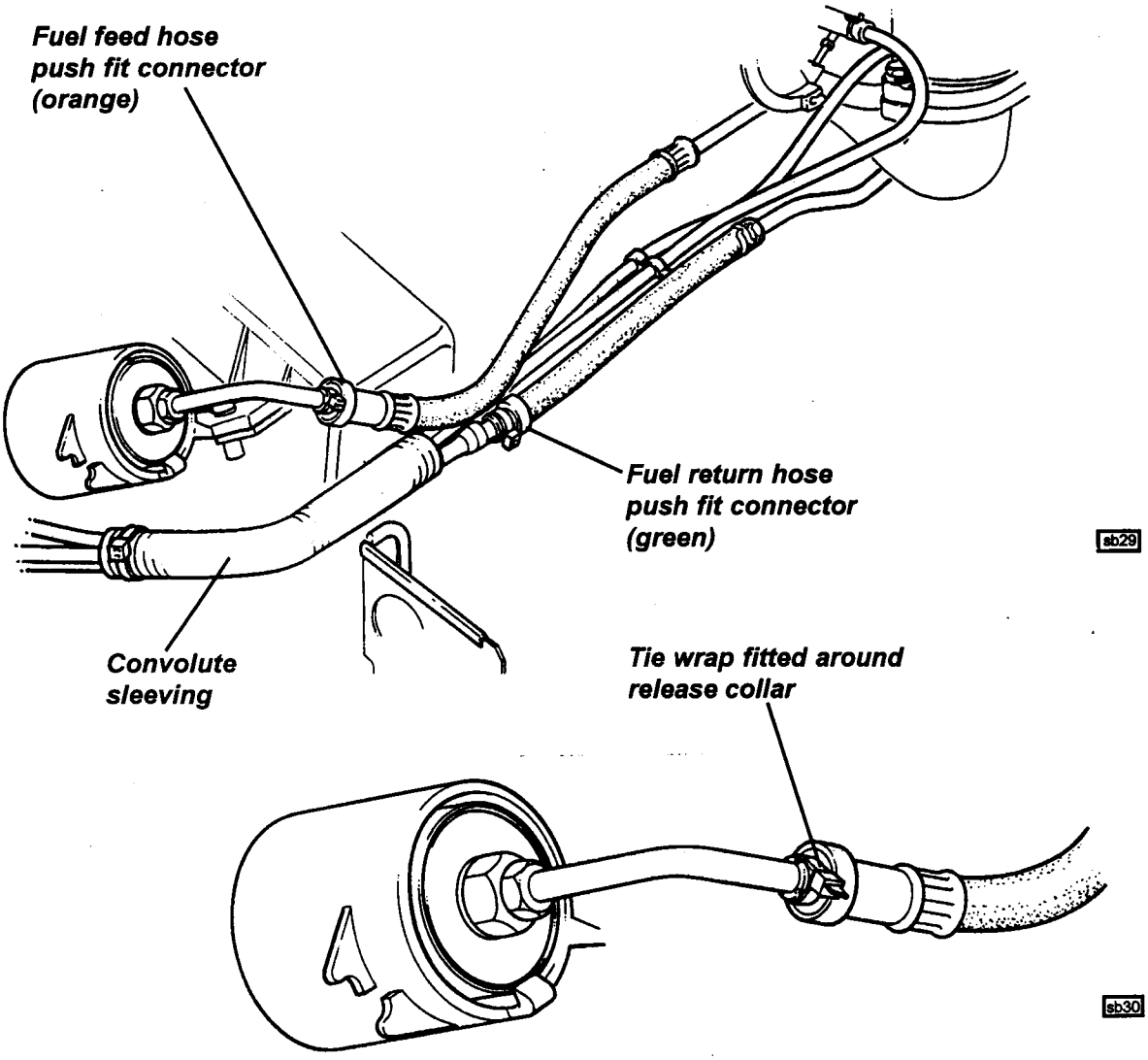

Fuel Injectors

The four fuel injectors are fitted between the pressurised fuel rail and the inlet manifold. Each injector comprises a solenoid operated needle valve and a specially designed nozzle to ensure good fuel atomisation. The ECM energises the injectors under engine run conditions, and provides an earth signal for the period the injectors are required to be open (referred to as 'pulse width'), spraying fuel onto the back of the inlet valves. Standard engines use group injection, where the fuel injectors are activated in pairs, 1 with 4 and 2 with 3, whereas VVC engines use fully sequential injection, with each injector activated individually.

During cranking, when the engine speed is below approx. 400 rpm, the ECM increases the pulse width (dependent on coolant temperature) to aid starting, and on VVC engines, operates the injectors in group mode. To prevent flooding, the ECM periodically inhibits the operation of the injectors during extended cranking.

Fuel Rail and Pressure Regulator Valve - Replacement

Do not attempt to remove the pressure regulator valve from the fuel rail; The valve is supplied only as an assembly with the rail. The fuel rail is removed from the engine complete with the four fuel injectors.

1. De-pressurise the fuel system, and disconnect the battery.

2. Remove the breather hose between intake plenum and cam cover, and the breather hose between the throttle body and cam cover.

3. Disconnect the vacuum hose between regulator valve and plenum.

4. Release the fuel return hose from the right hand end of the fuel rail and plug the connections.

5. Remove the two screws securing the fuel inlet pipe to the left hand end of the rail and withdraw. Discard the 'O' ring, and plug the connections.

6. Unplug the injector harness connector, and release from its retaining bracket.

7. Remove the two bolts securing the fuel rail to the inlet manifold, and carefully withdraw the rail complete with the four injectors and pressure regulator valve. Take great care not to damage the injector tips during the removal process. Cap the injectors and plug the manifold ports to prevent dirt ingress.

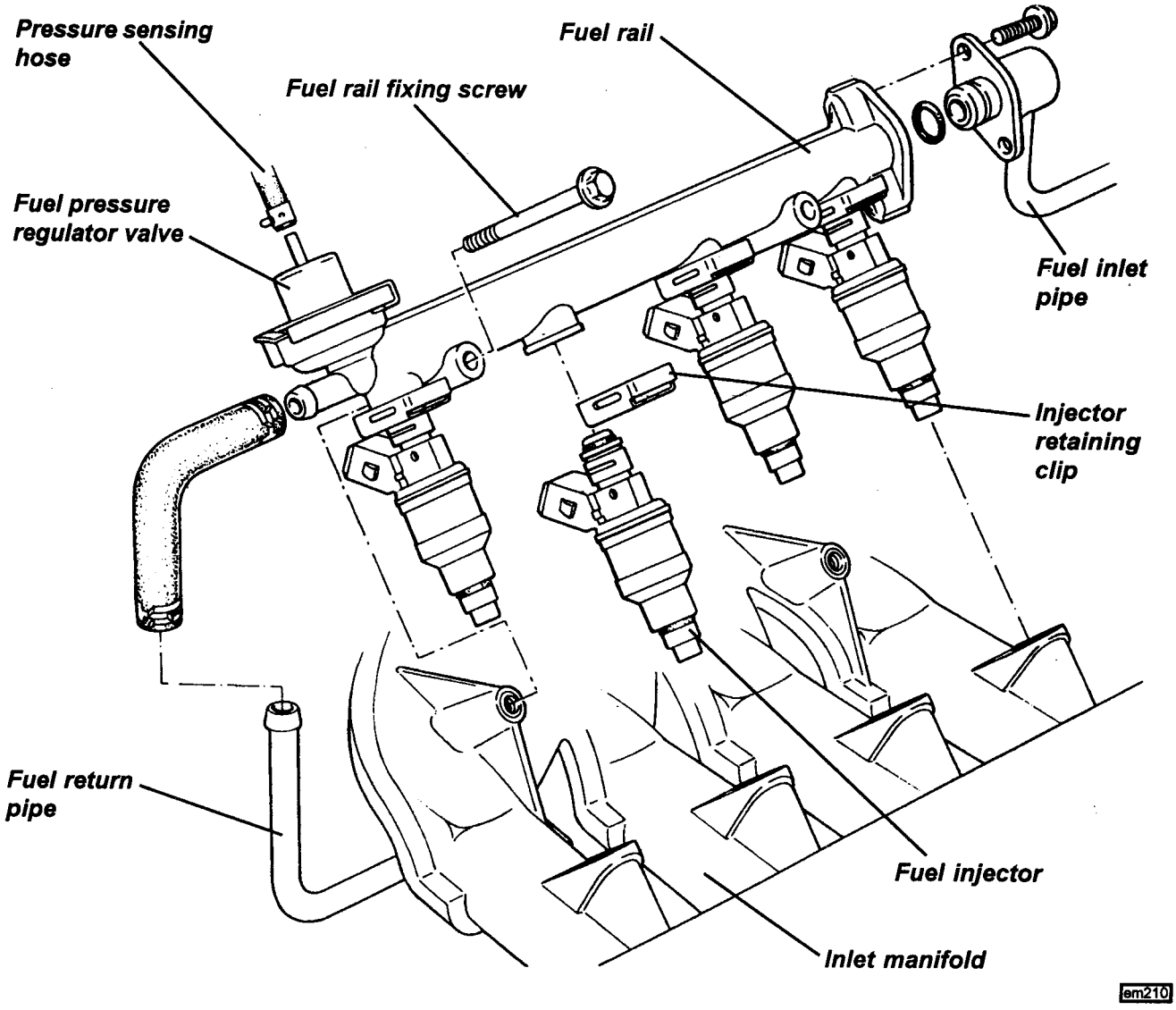

8. To remove an injector from the rail, unplug the harness connector, remove the clip, and withdraw the injector from the rail. Discard the two 'O' rings.

9. Before re-fitting the injectors and rail, clean the injector recesses in the rail and inlet manifold, and fit each injector with 2 new 'O' rings lubricated with silicone grease. Fit the injectors into the rail, and retain with the spring clip.

10. Carefully insert each of the injectors into its inlet manifold bore, and retain the rail with the two fixing bolts, tightened to 9 Nm.

11. Continue re-assembly in the reverse order to disassembly, tightening the inlet pipe to rail screws to 4 Nm.

EMN.17 - IGNITION SYSTEM

Standard Engines

The ignition system comprises a single ignition coil mounted on the RH side of the cylinder block, a distributor driven from the rear end of the inlet camshaft, and low tension control circuitry within the ECM. The ECM controls ignition timing based on inputs from the following sensors:

- Crankshaft position sensor; supplies engine speed and crankshaft position information.
- Manifold absolute pressure sensor; supplies engine load information.
- Engine coolant temperature sensor; allows timing variations for optimum cold driveability and idle.

Idle Speed Control

The main control over engine idle speed is attained by the use of the idle air control valve. However, for rapid response, and to inhibit stalling when additional loads are placed on, or removed from the engine, the ECM varies the ignition timing to achieve idle stabilisation. An observation of idle ignition timing will see a constantly changing reading.

Ignition Coil

The ignition coil has a low primary winding resistance (0.63 to 0.77 ohms at 20°C) in order to allow full high tension output to be reached faster than normal, and make coil operation more consistent throughout the engine speed range.

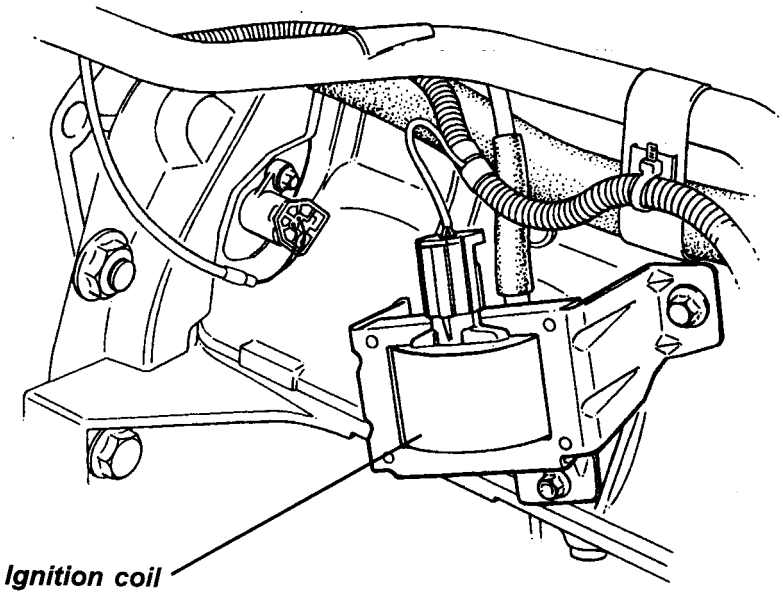

Distributor

A rotor arm is mounted on a 'D' shaped extension to the rear end of the inlet camshaft, and is retained by a patchlock screw. *Always replace the screw, or retreat with Loctite 242.* The rotor arm incorporates a suppressor and has a resistance value of 1.25 kohms. The distributor cap is retained by two screws, and is protected from oil contamination from camshaft oil seal leakage by a deflector plate.

Note that there is no requirement, or provision made for, positional adjustment of the distributor.

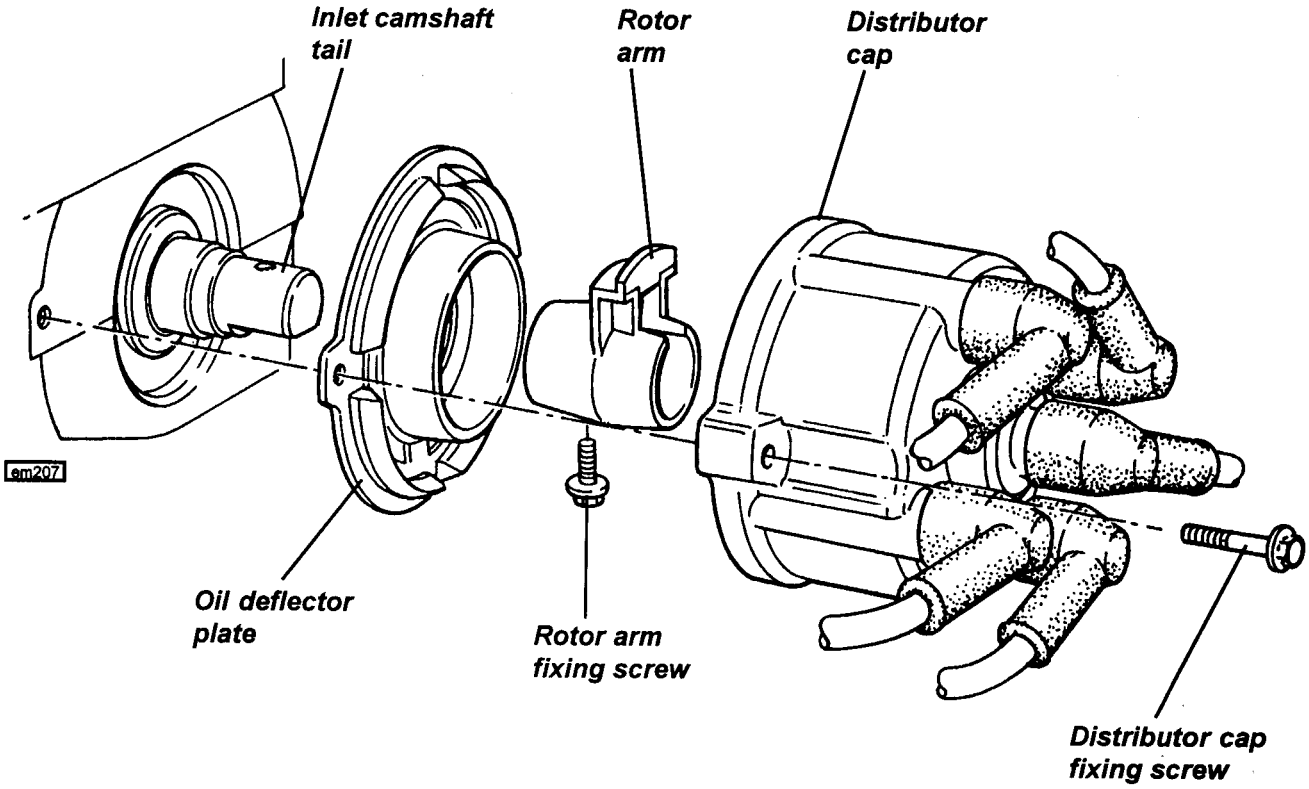

VVC Engines

These engines use a Distributorless Ignition System (DIS) employing a pair of double ended coils mounted on the RH side of the cylinder block. Each coil supplies two spark plugs simultaneously, one to a cylinder on its compression stroke, and one on its exhaust stroke, the latter being 'wasted' such that the system is sometimes described as 'wasted spark'. Coil one supplies spark plugs 1 & 4, and coil two supplies plugs 2 & 3.

Each double ended coil contains a primary winding, connected in series with the supply and the ECM, and an isolated secondary winding, connected in series with two spark plugs. It is important to note that there is no connection between the primary and secondary windings. The coils are triggered by the ECM which switches off the primary voltage and induces a high tension current to produce a spark in the spark plug connected to each end of the secondary winding. The direction in which the secondary winding is wound determines that plugs 1 & 2 receive positive sparks, and plugs 3 & 4 negative sparks.

It is important to note that if it is necessary to run or crank an engine with one or more plug leads disconnected, either the coil low tension must be disconnected, or provision for the spark energy to be dissipated must be made (e.g. fitting a loose, grounded spark plug to the lead); otherwise the electrical stess produced will cause deterioration of the H.T. coil and/or ECM.

Each coil has a primary winding resistance of 0.71 - 0.81 ohms at 20°C and a secondary winding resistance of approx. 10.5 kilohms.

Note that the coils can tolerate a certain amount of water spray, but contamination with anti-freeze solution can result in penetration of the insulation, with consequent danger of current leakage and misfire. Any coil suspected of being contaminated should be renewed.

TRANSMISSION

SECTION FH - M111 ELISE

	Sub-Section	Page
Introduction	FH.1	2
Gearchange Mechanism	FH.2	2
Lubrication	FH.3	6
Driveshafts	FH.4	6
Transmission Replacement	FH.5	10
Transmission Overhaul & Special Tools	FH.6	11

FH.1 - INTRODUCTION

The transmission assembly is an 'end on' type, mounted on the left hand end of the engine unit, and comprises of the clutch housing, five speed gearbox, final drive gears, and differential. The unit is supplied by Rover, and is designated 'PG1', with Rover publication RCL 0124ENG covering the description and overhaul of this transmission. A conventional bevel gear differential is fitted for the Elise application. The gearchange mechanism is different to that used by Rover, with the two cables running beneath the power unit (see sub-section FG.2).

The transmission serial number is printed on a bar code label fixed to the top of the clutch housing.

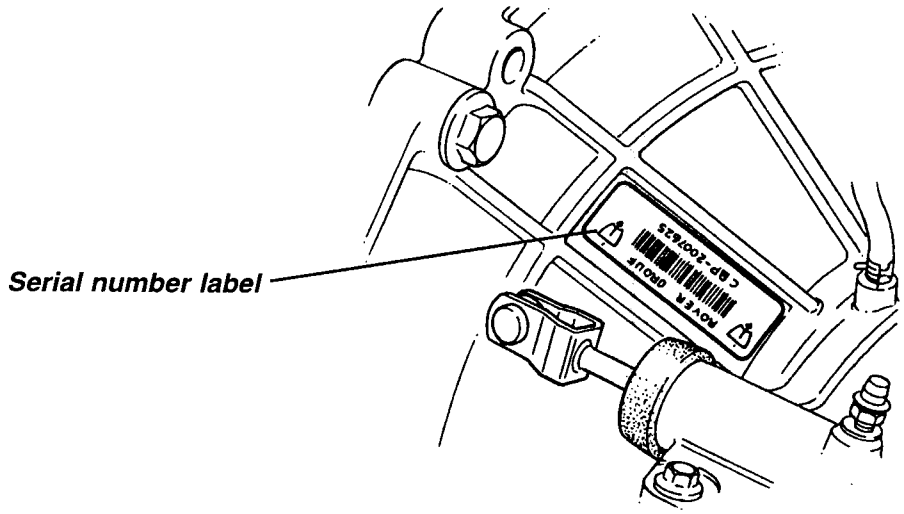

f106

FG.2 - GEARCHANGE MECHANISM

The gearlever is spring biased towards the 3rd/4th gear plane such that it must be moved against light spring pressure to the left before selecting first or second gear, and against similar pressure to the right before selecting 5th or reverse gear. An inhibitor device within the transmission selector mechanism prevents the selection of reverse gear directly from 5th, by requiring that the lever first be moved across the gate to release an interlock.

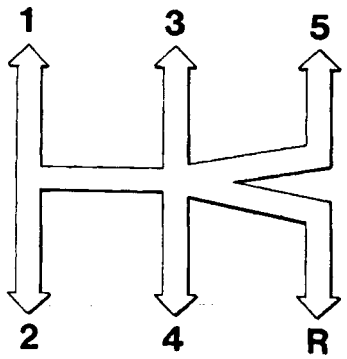

ohs15

A two cable mechanism is used to connect the gearchange lever with the transmission, one cable ('shift') to transmit the fore/aft movement of the lever, and a second ('crossgate') for the sideways movement. The steel gearchange lever incoporates an integral pivot ball which pivots in a two piece nylon socket in an alloy housing. The housing is mounted on a fabricated steel bracket which incorporates abutments for the two cables, and is fixed to the cabin floor crossmembers. Both gearchange cables run down the centre of the cabin floor, beneath the fuel tank bay, and under the engine to connect with the transmission selector shaft at the bottom rear of the power unit.

A vertical extension to the gearchange lever, below the pivot ball, connects via a ball joint to the shift cable. Fore/aft movement of the lever is thus transmitted directly to the cable, the rear end of which is connected directly to the transmission selector shaft via a short leg.

Crossgate movement of the gear lever is transmitted to a second cable via a short horizontal leg protruding from the left side of the gear lever pivot ball. Vertical movement of this leg is translated into a fore/aft motion by a foreward mounted bellcrank lever, the other end of which connects with the crossgate cable. The rear end of this cable links via another bellcrank lever, and a ball jointed link, to a lever on the transmission selector shaft, to which is imparted a rotational movement.

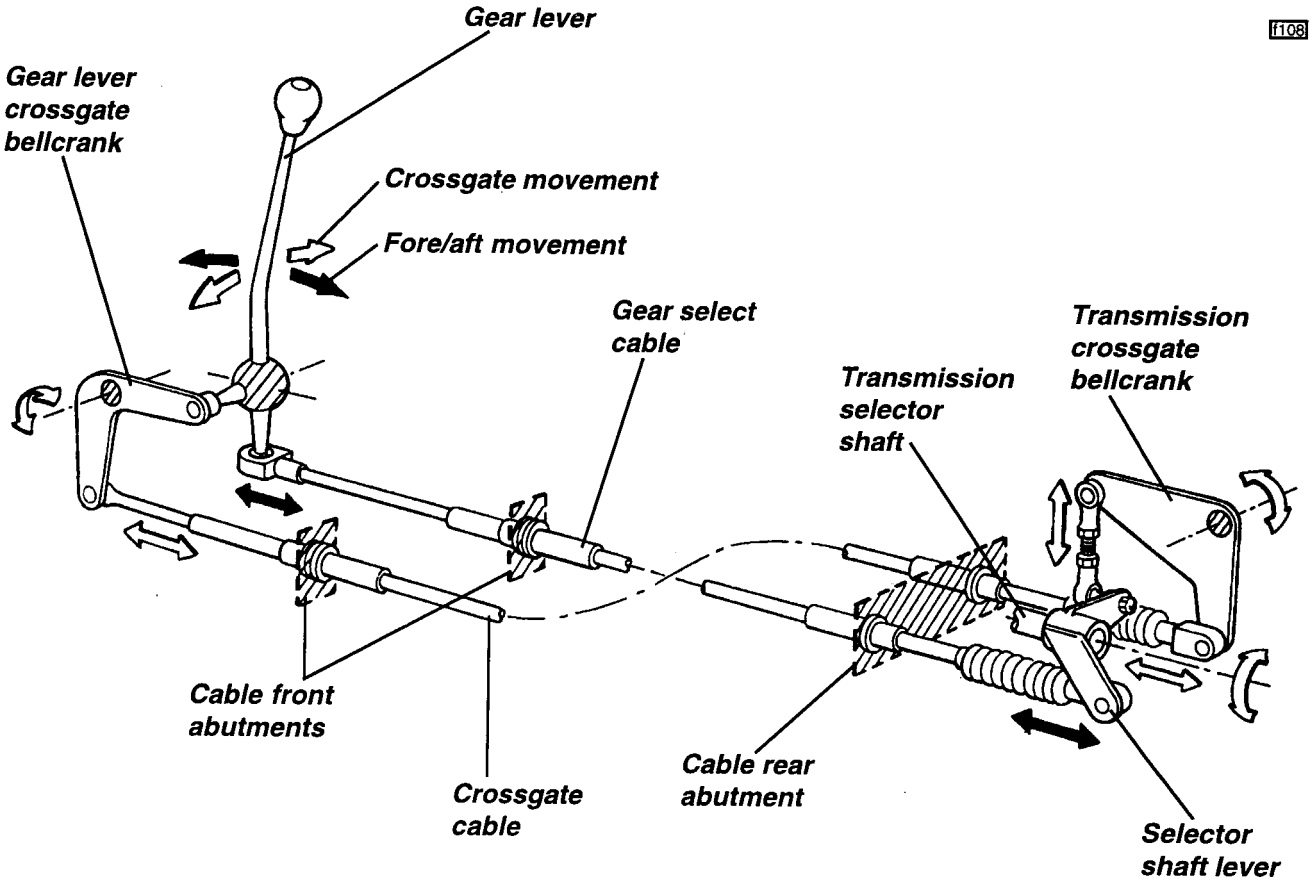

Gearchange Cable Adjustment

Both gearchange cables, crossgate and select, are of fixed length. Fore/aft adjustment is provided via slotted fixing holes in the transmission end abutment bracket, with crossgage adjustment catered for by an adjustable length tie rod between transmission end bellcrank lever and selector shaft.

With the gearchange mechanism assembled, and the transmission in neutral:

1. Fore/aft position: Viewed from the side, the lower part of the gear lever (before the rearward bend) should be vertical, or leaning very slightly to the rear. If necessary, slacken the two fixing bolts on the transmission end cable abutment bracket, and move forwards or backwards to achieve the specified lever position.
   Tighten the two bolts:
   Front M12 bolt; 77 Nm
   Rear M10 bolt; 45 Nm.

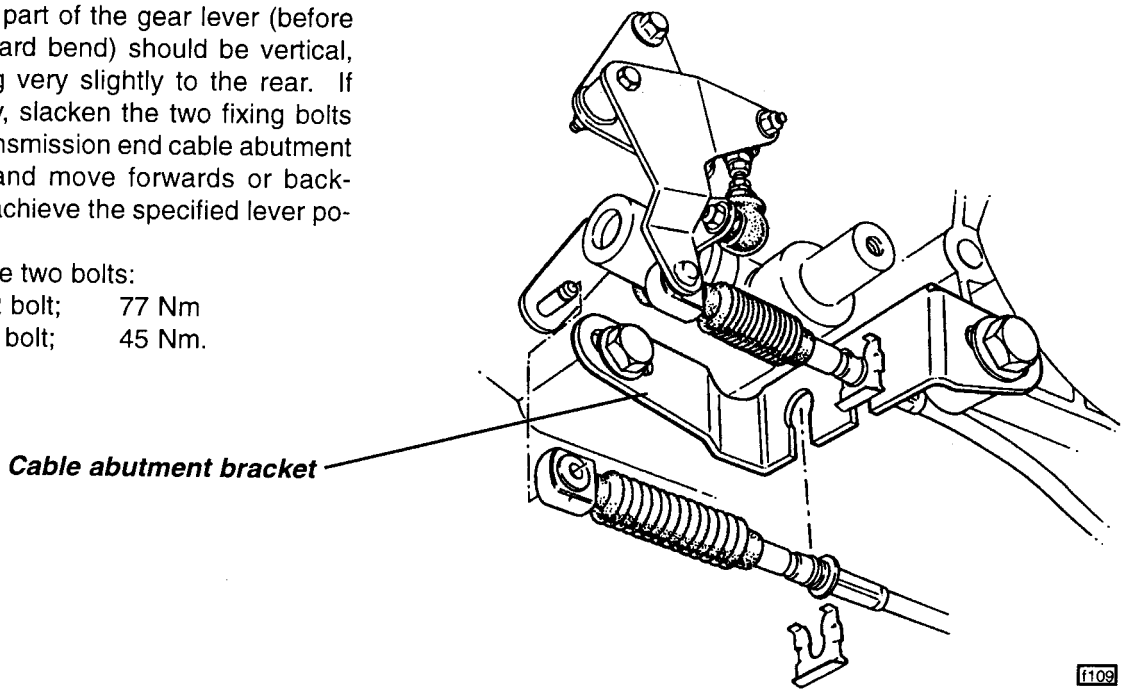

2. Crossgate position: Viewed from behind, the gear lever should be vertical. If necessary, adjust the length of the transmission end bellcrank tie rod. The nominal length between ball joint centres is 70 mm. The tie rod is RH threaded at both ends, so that before an adjustment can be made, the lower ball joint must be released from the selector shaft lever. Adjustments to the tie rod length can be made only in increments of one thread pitch:

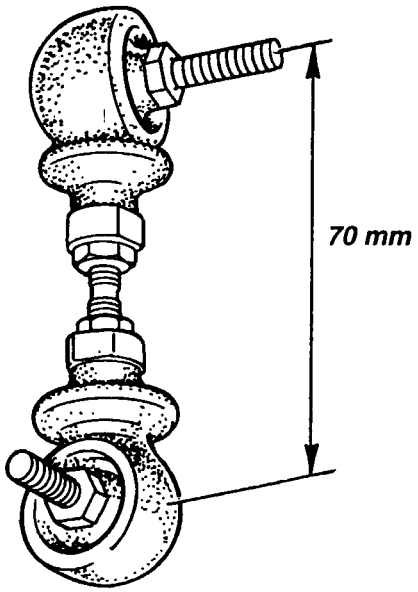

f110

- Lengthen the rod to move the lever position to the left;
- Shorten to move the lever to the right.

Ensure that there is similar thread engagement into each of the two ball joints. Refit the ball joint to the lever and tighten to 4.7 Nm.

3. 5th & reverse crossgate stop: An adjustable stop bolt is provided to limit the gear lever crossgate movement to the right (5th and reverse plane). If any adjustment to the crossgate cable is made, the stop bolt adjustment should be checked. For access to the lever mechanism, the gear lever knob and shroud must first be removed - unscrew the knob, remove the screw each side of the shroud, and lift the shroud over the lever.
The nominal stop bolt setting of 12 mm should be adjusted as necessary to provide minimal clearance when the lever is operated in the 5th/reverse gear plane, as is consistent with satisfactory gear selection.

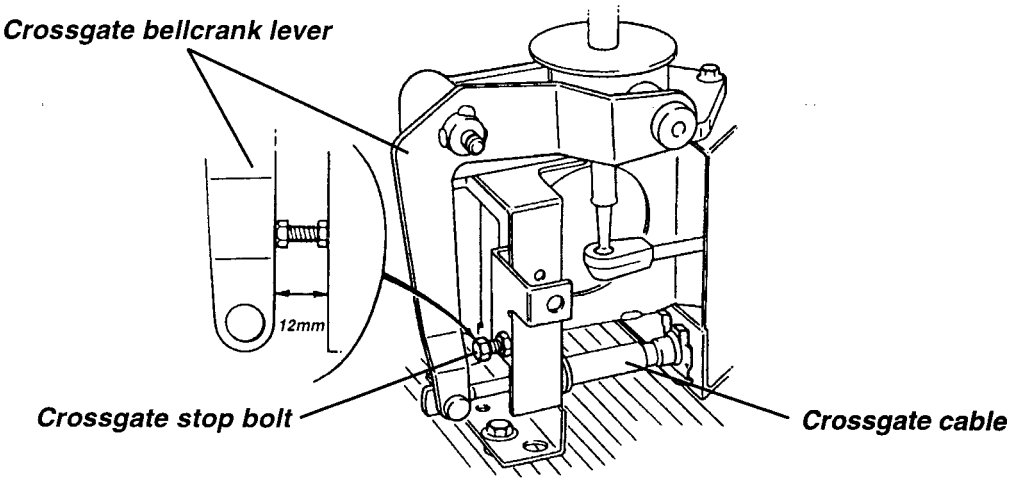

Gearlever Replacement

For access to the gear lever assembly, unscrew the gear knob, remove the single screw each side of the gear lever shroud, and lift the shroud over the lever. To remove the gear lever:

- Remove the 'E' clip from the bellcrank lever pivot.
- Unsnap the select cable socket from the gear lever ball.
- Remove the three screws securing the gear lever housing to the mounting bracket, disengage the bellcrank

lever pivot and crossgate spigot bush, and withdraw the housing and gear lever assembly.

To re-assemble:

- Fit the pivot socket gasket into the gear lever housing, followed by the top (smaller) section of the pivot socket.
- Apply Dow Corning Molykote 33 Medium silicone grease (A111F6016) to the gear lever pivot ball and to the crossgate spigot ball before fitting the lever into the housing followed by the lower section of the socket. Snap the plastic bush onto the lever crossgate spigot ball.
- Locate the bellcrank lever pivot into the gear lever housing, and retain with the 'E' clip. Fit the crossgate spigot into the bellcrank lever and locate the gear lever housing onto the mounting bracket.
- Fit and tighten the three gear lever housing screws, and snap the select cable socket onto the bottom of the gear lever .
- Check gear linkage operation and adjustments before fitting the pivot ball dust shield over the lever, and refitting the shroud.
  NOTE: To avoid the requirement to replace the retaining clip/bush, do not disconnect the crossgate cable from the bellcrank lever unless necessary.

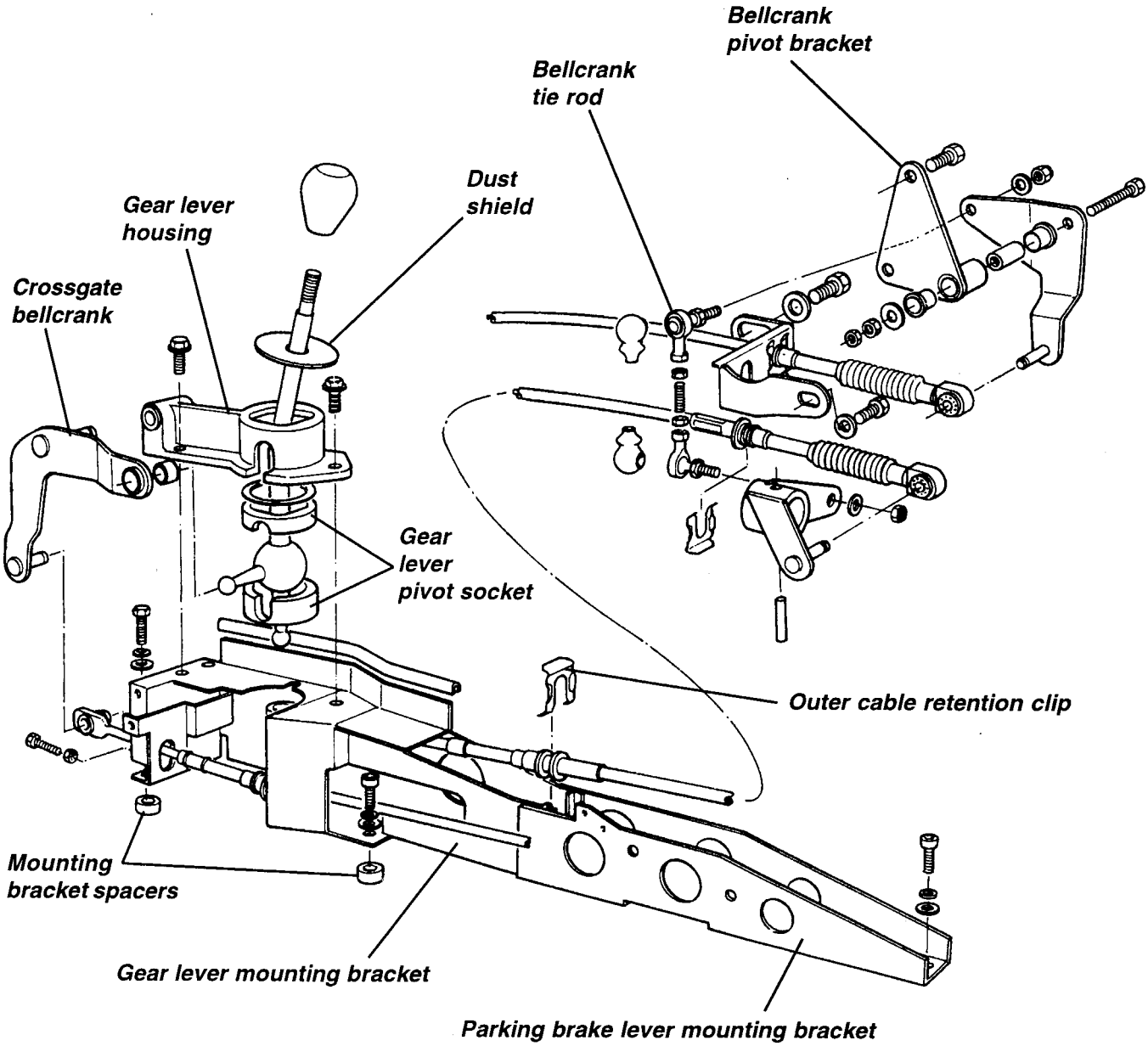

Gearchange Cable Replacement

For access to the gear cables, the gear lever shroud and parking brake lever trim must be removed: Unscrew the gear lever knob, remove the single screw each side of the shroud, and withdraw the shroud. Remove the single screw securing the parking brake trim to the rear bulkhead and ease the panel over the lever.

Unclip the crossgate cable from the bellcrank lever, or unsnap the select cable from the lever ball. Pull off the spring clip retaining the cable outer to the abutment bracket, and release the cable from the bracket. At the rear end, prise the cable off the lever, pull off the outer cable spring clip, and release from the abutment bracket. Release cable ties and clips as necessary to allow the cable to be withdrawn, noting the routing past the park brake lever.

Refit in reverse order to removal, paying particular attention to the routing through or alongside the park lever and gear lever mounting brackets. Check the cable adjustments as detailed above.

Gearlever Mounting Bracket

The gear lever mounting bracket is secured to the cabin floor by four M8 bolts, the rearmost of which also fixes the front of the parking brake lever bracket. Note that alloy spacers are used on the front three fixing points between bracket and floor. The whole assembly is offset towards the passenger side of the car, with alternative fixing holes provided either in the mounting bracket, or in the cabin floor.

FH.3 - LUBRICATION

The PG1 transmission is 'filled for life' with Texaco MTF94 fully synthetic lubricant, and requires no periodic renewal. If there are any signs of leakage, the source should be identified and appropriate action taken to rectify the fault.

A filler/level plug is provided on the left hand side of the the final drive housing, and with the car parked on a level surface, the oil level should be up to the level of this hole. A drain plug in the underside of the casing (square socket plug) permits the oil to be drained prior to transmission removal or repair.

Dry fill capacity = 2.4 litres. Refill = 2.1 litres.

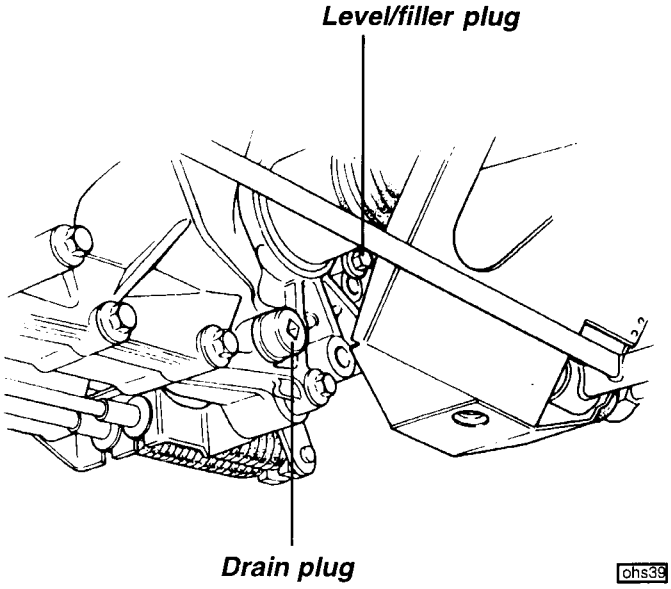

FH.4 - DRIVE SHAFTS

A driveshaft assembly comprising a steel shaft with a constant velocity joint at each end, is used to transmit the drive from each differential output gear to the rear wheel hub. The two shafts are of unequal length due to the offset transmission housing, with the longer shaft on the right hand side. Both driveshaft assemblies use plunging tripod type inboard C.V. joints, and six ball Birfield type outboard C.V. joints. The outboard joint is available as a service part, as is the inboard joint complete with shaft. Replacement gaiter kits are available for both joints. The joints themselves are packed with grease on initial assembly, and are maintenance free. It is however vitally important that the protective gaiters are carefully inspected at service intervals, to check for splits, tears or punctures, since the joint will deteriorate very quickly once contaminated with dirt or water. Damaged gaiters should be renewed immediately, once the servicibility of the joint has been established.

Clicking noises, torque reversal 'clonks', or shudder and vibration when accelerating are all possible symptoms of worn C.V. joints. It should not be possible to discern any free play in a joint, but care must be taken not to confuse this with transmission backlash, which may be considerable. Any symptoms that could be due to worn driveshaft joint assemblies, should be investigated and rectified without delay, since safety considerations are always of paramount importance.

The inboard C.V. joint is equipped with a male splined spigot shaft which engages with the female splines of the differential output sun gear, and is retained by a round section spring circlip on its end. Each of the two transmission output oil seals runs on a stepped shoulder on the C.V. joint spigot shaft. The outboard end of each driveshaft carries a second C.V. joint whose spigot shaft is used to clamp the hub and wheel bearing into the hub carrier via a thread on the end of the shaft.

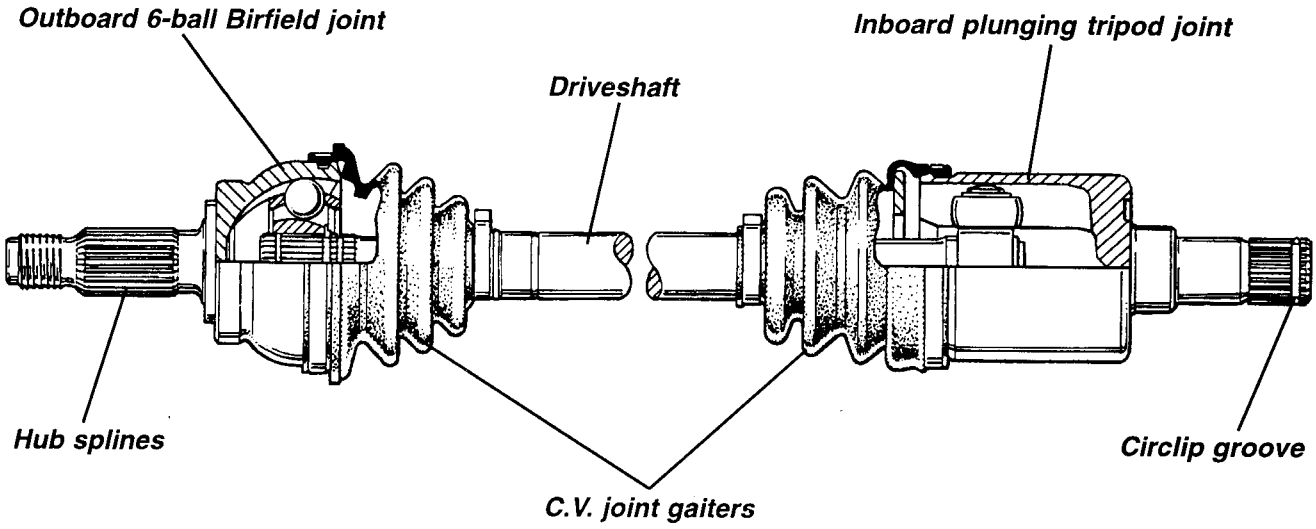

f111

Revised Transmission Output Seals

In order to reduce the possibility of seal damage during driveshaft insertion, the two transmission output shaft seals were modified in July '96, and fitted from transmission number C6BP 2009713. The new 'B' type seals incorporate a steel insert to protect the seal lips, and have a location flange on their outside diameter.

When replacing a seal, compatibility with the driveshaft (see below) must be maintained. Although the transmission casing was revised for the 'B' type seal to include a machined face for the seal flange to butt against, if necessary, a 'B' type seal may be fitted in an earlier type casing.

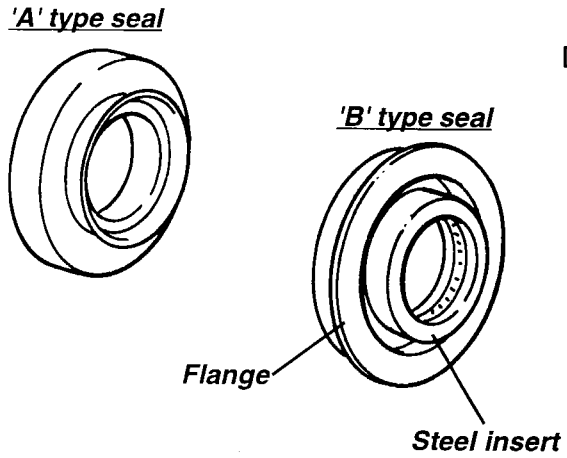

f115

With the introduction of the 'B' type seal, a corresponding change to the C.V. joints was made in order to provide clearance for the steel insert in the seal, with an identification groove being added to the joint's outer surface for ready reference. The new joint may be fitted to both new and old type transmissions/seals, but the **old type joint must not be fitted into a new type transmission or 'B' type seal.**

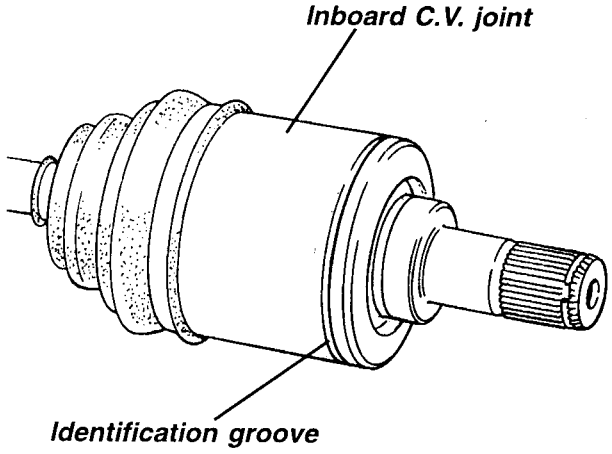

f114

Driveshaft Replacement

Removing a driveshaft from the transmission will result in some loss of transmission lubricant. It may be preferred to drain off some oil via the transmission drain plug beforehand.

1. Remove the transmission drain plug and drain off approximately 1 litre of oil into a clean container for re-use.

2. Remove the rear road wheel.

3. Before attempting to release the driveshaft hub nut, first use a punch to knock the distorted end of the nut clear of the driveshaft slot. Apply the parking brake and release the driveshaft hub nut.

4. Remove the wheel speed sensor from its plinth to prevent damage during driveshaft removal.

5. To allow the hub carrier to be leant outwards and provide room for the driveshaft to be withdrawn from the transmission and hub, remove the bolt securing the toe link to the hub carrier and remove the two bolts securing the top ball joint plinth to the hub carrier, taking note of the shim pack fitted between plinth and carrier.

6. The inboard C.V. joint is retained in the transmission by a rounded section circlip, and may be removed using a special wedge tool T000T1276, or by applying a shock pull to the C.V. joint body Using a slide hammer with a forked end.

   CAUTION: Do NOT attempt to remove the inboard C.V. joint from the transmission by pulling on the driveshaft. This action will cause the joint to become disassembled and may entail replacement of the joint. The components of the inboard plunging joint are held in position, for transit purposes only, by a collar within the boot which will be overidden if excessive axial force is used. Apply pressure only to the 'tulip' or outer body of the joint.

   Withdraw the inboard C.V. joint from the transmission, taking great care not to damage the output seal, and fit blanking plug T000T1385 into the transmission to limit the amount of transmission oil loss.

7. Withdraw the driveshaft from the hub using a puller if necessary, and remove the driveshaft assembly from the car.

8. Before re-fitting a driveshaft, first renew the round section circlip (A100R6001F) on the end of the inboard joint spigot shaft, and lubricate the circlip with grease. Also, check the condition of the transmission output seal, and renew if necessary. Lubricate the lip of the seal with transmission oil, and grease the corresponding shoulder on the driveshaft (C.V. joint) spigot, to reduce the danger of damaging the seal on assembly.

9. A special tool T000T1390 is available to protect the seal during driveshaft fitment, and should always be used with the more vulnerable early type seal (see above).

   To use the tool:
   - Check first that the tool is clean and undamaged before fully inserting into the oil seal. Check that the split joint in the tool is butted correctly.
   - Carefully insert the driveshaft through the seal protector until it engages in the splines of the differential output gear.
   - Remove the protector tool by pulling over the shaft.

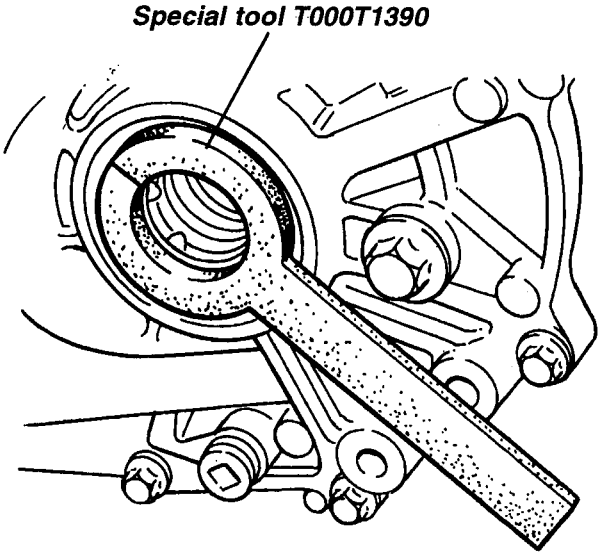

- Press the C.V. joint into the differential gear splines until a 'click' indicates that the circlip has engaged in its location. Pull on the body of the joint to check security.

10. Fit the outer end of the shaft into the hub, and retain with the nut.

11. Refit the top ball joint plinth to the hub carrier with the camber adjustment shim pack in position, and tighten the two socket head bolts to 45 Nm. Apply the parking brake and tighten the driveshaft nut to 220 Nm. Tighten the toe link to hub carrier pivot bolt to 45 Nm. Refit the wheel speed sensor to its plinth.

12. With the car on a level surface, top up the transmission oil to the filler/level plug hole.

Driveshaft C.V. Joint and/or Gaiter Replacement

The outboard joint is available as a separate part, whilst the inboard joint is supplied complete with the driveshaft. Gaiter kits are separately available for both joints.

1. Remove the driveshaft assembly from the car (see above).

2. Cut off the gaiter retaining clips from both joints, and slide the gaiters along the shaft.

3. The outboard joint is retained by a round section circlip on the end of the shaft. To remove the joint, hold the drive shaft in a vice, and use a soft mallet to tap the joint over the circlip and off the shaft. If the joint is reluctant to move, use a brass drift on the front face of the inner race.

   CAUTION: Do not attempt to remove an outboard joint without first removing the shaft assembly from the car. Unless the shaft is securely retained (e.g. in a vise) attempts to remove the outboard joint may result in the inboard joint becoming disassembled.

4. Slide both C.V. joint gaiters off the driveshaft.

5. Cleaning & Inspection: Complete disassembly of either joint is NOT recommended., The separate components are a precision fit and develop their own individual wear patterns, such that any interchanging or re-orientation of parts is likely to result in premature failure.
   If the grease in the joint is contaminated with dirt or water, it is likely that the joint is damaged, and should be replaced. If the grease is not contaminated, the joint should be degreased by soaking in a suitable solvent (NOT petrol), and then carefully inspected.
   On the outboard ball type joint, tilt the inner race to one side to expose each ball. Severe pitting, galling, play between ball and its cage window, any cracking or damage to the cage, or pitting, galling or chips in raceways, call for joint replacement.
   On the inboard, tripod type joint, examine the fit between the rollers and the housing. Excessive free play, roughness on either roller or track surfaces, damage to the bearings or trunnion, call for joint replacement. If the joint is found to be serviceable, it must be repacked with special grease as follows:
   Outboard joint; 1 sachet A100R6009 (52 ml) - boot kit contains 2 sachets
   Inboard joint; 2 sachet A100R6010 (62 ml) - boot kit contains 3 sachets

6. Replace the circlips securing the inboard joint to the transmission and the outboard joint to the shaft. New circlips should always be used to ensure security of joint retention. Note that the circlip for the outboard joint is supplied in the boot kit for either joint, but that the inboard joint circlip should be ordered separately.

7 Tape over the shaft outboard splines to prevent damage to the new gaiters, and slide the inboard gaiter and small retaining clip onto the shaft, followed by the outboard gaiter small clip and gaiter. Remove the tape.

8. Outboard Joint: New joints are pre-packed with grease, but if re-fitting a cleaned out joint, lubricate the joint with one sachet of the special grease provided in the boot kit. Fill the ball tracks with grease both behind and in front of the balls, pack around the balls, and the inside of the splines, so that grease is pushed behind the joint when the shaft is inserted. Use the second grease sachet from the boot kit to fill

the inside of the new boot.
NOTE: The grease provided in the kits is specially formulated for wear resistance and durability. DO NOT use substitutes or mix with other lubricants.

9. Inboard Joint: If re-fitting a cleaned out joint, pack the joint with two of the grease sachets from the gaiter kit. Use the third grease sachet from the gaiter kit to fill the inside of the new gaiter.

10. Slide the outer joint onto the shaft splines, and tap the joint into position until the circlip 'clicks' into its groove. Pull on the joint to ensure it is fully located.

11. Pull each gaiter over its C.V. joint and locate the lips of the gaiter in the grooves on the joint and shaft. Before fitting the gaiter clamps, ensure that the gaiter is ventilated so that it is not dimpled or collapsed. Position the plunging joint with 80 mm between the boot clip grooves before ventilating by inserting a smooth rod (take care not to damage the boot) between the large end of the boot and the joint, and fitting the retaining clips. Tighten the clips using suitable pliers.

12. Refit the driveshaft assemblies to the car (see above).

FH.5 - TRANSMISSION REPLACEMENT

With the car supported on a 'wheel free' lift, the transmission can be removed from below, leaving the engine 'in situ':

1. Remove the LH rear lower wishbone:
   - Release the bolt securing the spring/damper unit to the lower wishbone;
   - Release the wishbone to chassis pivot bolts;
   - Release the parking brake cable clip and swing the wishbone out of the way.

2. Release the RH rear suspension toe control link from the hub carrier, and release the top ball joint plinth from the hub carrier taking note of the camber adjustment shimplates. in order to allow withdrawal of the driveshaft from the transmission.

3. Release both driveshaft inboard C.V. joints from the transmission using special wedge tool T000T1276, or by applying a shock pull to the C.V. joint body using a slide hammer with a forked end. Fit blanking plug T000T1385 into the transmission to limit the amount of transmission oil loss.

   CAUTION: Do NOT attempt to remove an inboard C.V. joint from the transmission by pulling on the driveshaft. This action will cause the joint to become disassembled and may entail replacement of the joint. The components of the inboard plunging joint are held in position, for transit purposes only, by a collar within the boot which will be overidden if excessive axial force is used. Apply pressure only to the 'tulip' or outer body of the joint.

4. Remove the 'R' clip and clevis pin connecting the clutch slave cylinder to the release arm. Remove the four bolts fixing the slave cylinder bracket to the transmission, and support aside.

5. Release the two bolts securing the starter motor and dirt shield to the clutch housing. Remove the shield, and withdraw and support the starter motor, taking care to protect the live starter motor lead from grounding.

6. Remove the dirt shield from the top front of the clutch housing.

7. Disconnect the reverse light switch.

8. Disconnect the two gearchange cables from their transmission levers, and release the cables from the abutment bracket.

9. Remove the air cleaner housing and mounting plate from the roll over bar brace.

10. Support the weight of the transmission assembly before removing the LH engine (transmission) mounting and bracket.

11. Remove the six bolts securing the clutch housing to the engine:
    - 2 bolts to the sump;
    - 1 bolt each side through the block lower 'wings';
    - 2 bolts securing the top of the clutch housing to the engine.

12. Pushing the engine to the right and downwards at the flywheel end, withdraw the transmission from the engine.

13. Refit the transmission in the reverse order to removal with the following notes:
    - Check that the type of output shaft seals fitted are compatible with the driveshaft inboard C.V. joints - see Sub-Section FH.4.
    - Use new circlips on the spigots of the inboard C.V. joints, and follow the procedure in Sub-Section FH.4 to refit.

FH.6 - TRANSMISSION OVERHAUL

The overhauling of the Rover supplied type PG1 transmission, is detailed in Rover publication RCL 0124ENG. Note that a conventional bevel gear differential is used for the Elise application. Special tools are available through Lotus under the following part numbers:

Transmission Special Tools

Description	***Lotus Part No.***	***Churchill Part No. (ref.)***
Driveshaft Removal Wedge	T000T1276	18G1578
Adaptor Plate, bearing puller	T000T1291	18G 2-3
Driver Handle, bearing dolly	T000T1292	18G 134
Replacer Dolly, input shaft oil seal	T000T1293	18G 134-4
Slide Hammer, output shaft bearing remover	T000T1294	18G 284
Adaptor, output shaft bearing remover	T000T1295	18G 284-14
Driver Handle, bearing dolly	T000T1296	18G 1354
Replacer Dolly, output shaft bearing	T000T1297	18G 1354-5
Circlip Pliers, bearing access plug	T000T1298	18G 1392
Thrust Pad, bearing puller	T000T1299	18G 1397
Hex. Socket, M14, access plug	T000T1300	18G 1472
Anti-Spread Plate, input/output shafts	T000T1301	18G 1473
Replacer Dolly, differential bearings	T000T1302	18G 1675
Replacer, clutch release shaft inner bush	T000T1303	18G 1723-1
Replacer, clutch release shaft outer bush	T000T1304	18G 1723-2
Clutch Alignment Mandrel	T000T1277	18G1483
Blanking Plug, driveshaft output	T000T1385	-
Replacer Dolly, output seal, RH & 'A' type LH	T000T1388	18G1354-16
Replacer Dolly, output seal, 'B' type LH	T000T1389	18G134-12
Seal Protector, output shaft seals	T000T1390	-

WHEELS & TYRES

SECTION GF - M111 ELISE

	Sub-Section	Page
General Description	GF.1	2
Winter Tyres & Snow Chains	GF.2	4
Emergency Punctured Tyre Inflator	GF.3	4
Security Wheelnuts	GF.4	5

GF.1 - GENERAL DESCRIPTION

The single piece, light alloy roadwheels, in various styles, are fitted with Pirelli P Zero tyres, engineered to provide the optimum balance of ride and handling characteristics. Pirelli P Zero are the recommended tyres for use on the vehicle under normal road conditions. In order to fully exploit the dynamic qualities and packaging opportunities, the wheel and tyre sizes are different front and rear, so that interchanging of wheels and tyres between axles is not permissible. Note that the tyre tread pattern is asymmetric with the tyre sidewalls marked 'Inner' and 'Outer'; check that replacement tyres are correctly fitted. Part of the tread pattern is also directional in appearance, but the direction of rotation has no bearing on the tyre performance.

The tyres should be inspected frequently by the vehicle user, and also at every service, for signs of cuts, abrasions or other damage, and for any uneven tread wear patterns. Uneven treadwear may indicate that the suspension geometry or dampers require attention. Care should be taken when parking to avoid tyre contact with high or sharp edged kerbs, as mistreatment of this nature can cause internal damage to the tyre structure which may not be readily apparent. The alloy wheel rims may also be distorted or damaged by careless parking, and result in wheel imbalance or loss of tyre pressure. Safety considerations should always be paramount when assessing tyre condition and serviceability, and the tyres replaced if any doubt exists, or if the legal tread depth limits are approached.

The cold tyre pressures should be checked every week, or every 1,000 miles (1,700 km), whichever is the sooner, and corrections made as necessary. Under-inflation will cause excessive wear, rapid deterioration of the tyre sidewalls and heavy steering, whereas overinflation results in a hard ride and increased susceptibility to tyre damage. Both conditions will cause a degradation in the vehicle handling qualities. It is important that the tyre pressures are adjusted only when the tyres are cold (driven less than one mile), as the pressures may increase by 0.3 - 0.5 bar (4 - 8 lb/in²) when the tyres are warmed to normal running temperature. The tyre valve dust cap should always be replaced in order to prevent the ingress of dirt and moisture into the valve, which could cause leakage.

When balancing the wheel and tyre assemblies, the wheels should be located by the centre spigot - NOT by the wheel bolt holes. In order to maintain the correct handling feel and minimum steering wheel shake, it is very important that the radial and lateral run out of the tyres are to the high standard required by Lotus Cars. If any difficulty is experienced with replacement tyres, refer to the tyre manufacturer.

Wheel & Tyre Specification

Wheels

Type	- std. prior April '99 *	AWI light alloy; 5 split-spoke style	* Approx. VIN X 6429
	- std. from April '99 *	Rimstock light alloy; 12 spoke style	
	- 111S & std. option	O.Z. light alloy; 6 spoke style	
Size - front		5.5J x 15CH/H2 ET14	
- rear	- std	7J x 16H2 ET16	
	- 111S & std. option	7.5J x 16H2 ET10	
PCD		95.25 mm	
Inset - front		+ 14 mm	
- rear	- std	+ 16 mm	
	- 111S & std. option	+ 10 mm	
Wheel nut torque		80 - 85 Nm	
Radial run-out at bead seat		0.3 mm max.	
Lateral run-out at rim flange		0.3 mm max.	

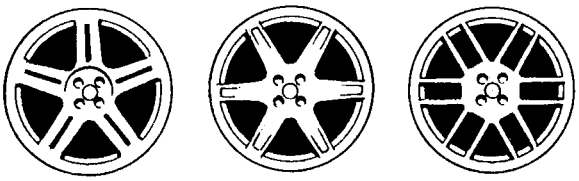

3401a

AWI *O.Z.* *Rimstock*

Note that the inset figure is the offset of the wheelrim centreline reletive to the wheel/hub mounting face. A positive figure indicates that the wheelrim centreline lies inboard of the wheel mounting face, whereas a negative figure means the wheelrim centreline is outboard of the mounting face.

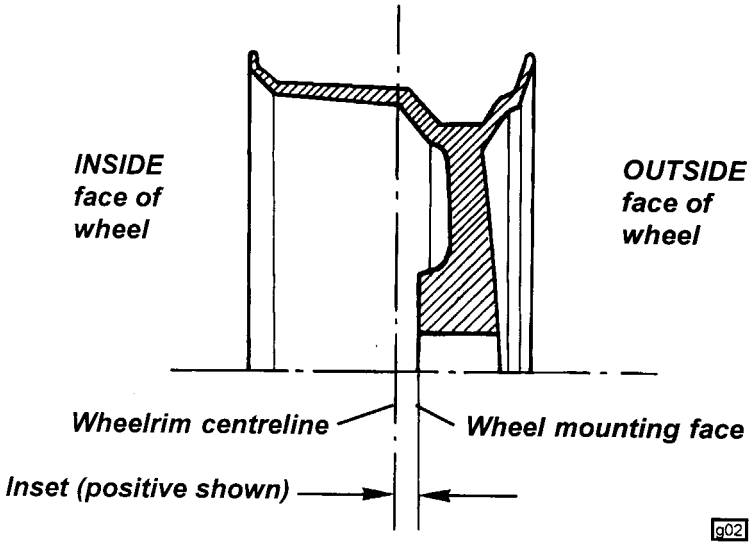

Tyres - Standard Fitment

Type			Pirelli P Zero
Size - front			185/55 R15 81V
- rear	- std		* 205/50 ZR16 87W
	- 111S & std. option		# 225/45 ZR16
Pressure (cold)	- front		1.6 bar (23 lb/in²)
	- rear	- 205	1.7 bar (24.5 lb/in²)
		- 225	1.9 bar (27.5 lb/in²)

* *Pirelli Zero 205/50 rear tyres:* There are variations in the specification of Pirelli tyres with this designation, dependent on where and when they were manufactured. Lotus fitment should be:

either: i) Made in Italy (moulded on inside tyre wall)

or: ii) Made in Great Britain (moulded on inside tyre wall) ***and*** with a DOT date of week 35 year 1997, coded as 357, or later (see below).

Note:
- a) The new U.K. built tyre was introduced on production at VIN: V 1700 (approx).
- b) Italian and U.K. variations of rear tyre should not be mixed on the same axle.
- c) Italian built rear tyres are available under part number A111G6007H, but will be superceded by the new U.K. built version.
- d) U.K. built Lotus approved rear tyres are available under part number A111G6022H.
- e) The DOT code is moulded on the outside wall, with only the last number group relevant to this issue. Note that the three digits represent a date code as explained above, and not an ordinary sequential number.

\# *Pirelli Zero 225/45 rear tyres:* There are variations in the specification of this Pirelli tyre dependent on when it was manufactured. For the Elise, use only tyres with a DOT date code of week 35 of year 98, coded as '358' or later.

Alternative Service Fitment

As an alternative to Pirelli tyres, a complete vehicle set of Michelin Pilot SX-GT tyres may be fitted in service using the wider rear tyre specification.

Type		Michelin Pilot SX-GT
Size - front		185/55 R15 81V (Lotus part no. A111G6020H)
- rear		225/45 ZR16 89V (Lotus part no. A111G6021H)
Pressure (cold)	- front	1.6 bar (23 lb/in²)
	- rear	1.7 bar (24.5 lb/in²)

It is not recommended to mix Pirelli and Michelin tyres on the same vehicle.

GF.2 - WINTER TYRES & SNOW CHAINS

If the car is to be used in very cold territories, or driven on snow covered roads, it is recommended to fit winter tyres developed specifically for such conditions. Lotus approves the fitment of Michelin X M+S 130 winter tyres in the following sizes:

Type	Michelin X M+S 130
Size - front	185/55 R15 81T mounted on standard 15 inch front wheels.
- rear	195/60 R15 88T mounted on standard 15 inch ***front*** wheels.
Pressure (cold) - front	1.6 bar (23 lb/in²)
- rear	1.7 bar (24.5 lb/in²)

Note that the rear winter tyres are to be mounted on standard 15 inch front wheels rather than the standard 16 inch rear wheels.

WARNING:
- **When winter tyres are fitted, a maximum speed of 118 mph (190 km/h) must be observed.**
- **The tyres are NOT suitable for studding.**

Tyre Chains

Snow chains may by used in extreme conditions only in conjunction with winter tyres (see above) and fitted only on the rear wheels. Lotus approves the fitment of Pewag FX 67 S Ring-Super-X snow chains, available under Lotus part number A100G6011F. Close attention should be paid to the fitting and tensioning instructions supplied with the chains, and an appropriate driving style adopted. The chains should be removed as soon as road conditions allow.

GF.3 - EMERGENCY PUNCTURED TYRE INFLATOR

In order to fully exploit the benefits of light weight, and to maximise stowage space and convenience, a 'keep you mobile' punctured tyre inflator aerosol is stowed in the front services compartment. When the aerosol is connected to the tyre valve, and the button pressed, a mixture of liquid latex and propellant is injected into the tyre, such that the solidifying latex is forced into the puncture site at the same time as the tyre is inflated, effecting a temporary repair and enabling the car to be driven at moderate speed to the nearest tyre depot.

WARNING:
- **Use of the aerosol does not constitute a permanent repair, but is designed to allow the car to be driven to the nearest tyre depot. At the earliest opportunity, the tyre should be professionally repaired or replaced dependent on the severity of the damage.**
- **Until the tyre is repaired or replaced, the car should be driven in a moderate manner, not exceeding 30 mph (45 km/h).**
- **The aerosol should not be used for large holes or repairs, or when the tyre sidewall has been damaged, or if the tyre has been displaced from the rim.**
- **The aerosol should be carried at all times in the stowage bracket provided in the front services compartment; never in the passenger compartment.**

Directions for use of the aerosol: As soon as a puncture is suspected, pull off the road at the first safe opportunity. If possible avoid driving on a deflated tyre, or irreparable damage to the tyre may be caused.

Before using the aerosol, carefully read all the instructions on the canister, or on any literature accompanying the product. The following instructions apply to the use of Holts Tyreweld:

1. Remove the object causing the puncture, and position the wheel with the puncture site lowermost. Deflate the tyre fully.
2. Shake the can vigorously. In cold conditions, warm the can using the car's heater outlets, or by body warmth.
3. Screw the aerosol tube onto the tyre valve, remove the cap, hold the can upright and press the button until the tyre is firmly inflated.

4. Immediately drive for 6 - 12 miles (10 - 20 km) (or to the tyre depot if nearer) in a moderate manner and not exceeding 30 mph (45 km/h), to allow the sealant to spread. Then check and adjust the tyre pressure as necessary.
5. Have the tyre professionally repaired or replaced at the earliest opportunity, and until such time, limit speed to 30 mph (45 km/h) with a moderate driving manner. Note that some tyre repairers may make an additional charge for cleaning the sealant off the tyre before repair, and that any subsequent repairs may not be guaranteed.
6. Replace the inflator canister.

GF.4 - SECURITY WHEELNUTS

On cars so equipped, each of the four road wheels is fitted with one security keyed wheel nut in order to deter theft and vandalism. The special splined security nut requires a matching key coded socket before it may be removed using a standard 19mm wheelbrace. For aesthetic purposes, the coded nut is capped by a metal cover, which may be removed using an extractor tool stowed, together with the key coded socket, in a grommet in the windscreen buttress, at the right hand rear corner of the front services compartment.

Push the extractor over the cover until it clips onto the rim, and withdraw the cover. Mate the key coded socket with the nut, and undo using a standard 19mm wheelbrace.

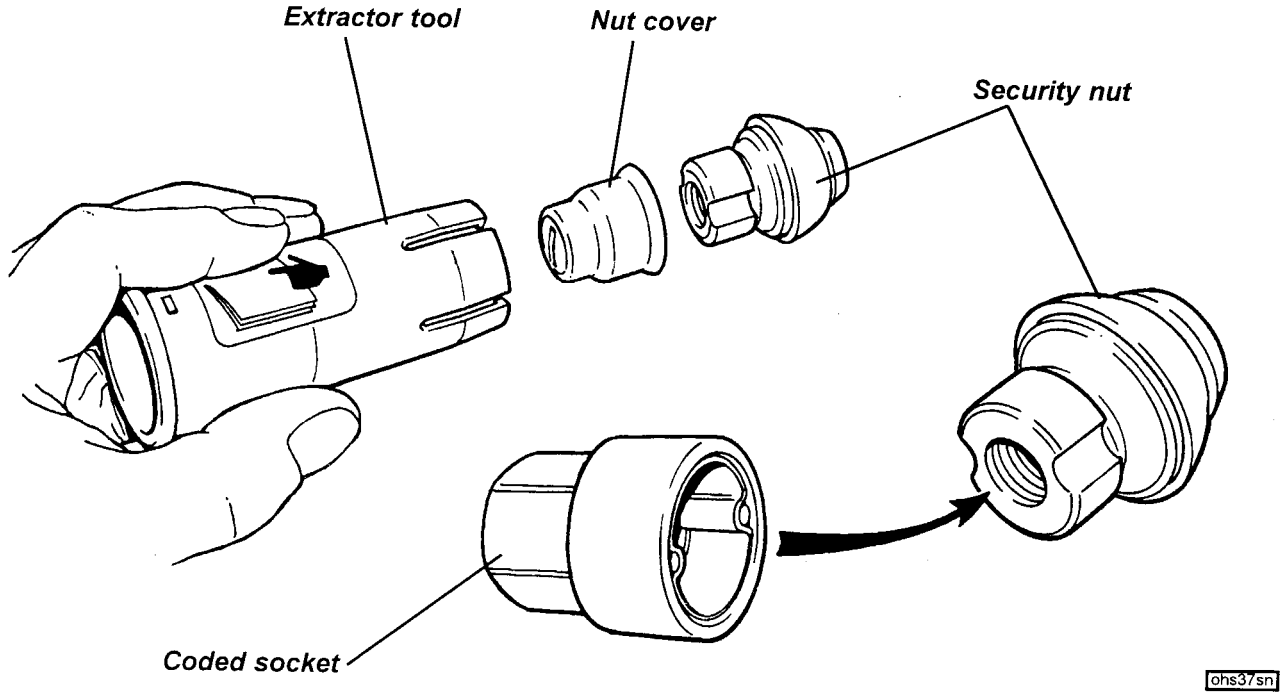

STEERING

SECTION HE - M111 ELISE

	Sub-Section	Page
General Description	HE.1	2
Steering Wheel	HE.2	2
Upper Column Assembly	HE.3	4
Intermediate Column	HE.4	7
Front Wheel Alignment & Rack Gaiters	HE.5	8
Rack & Pinion Assembly Removal/Replacement	HE.6	9
Adjustment of Rack Bar Thrust Pad	HE.7	10

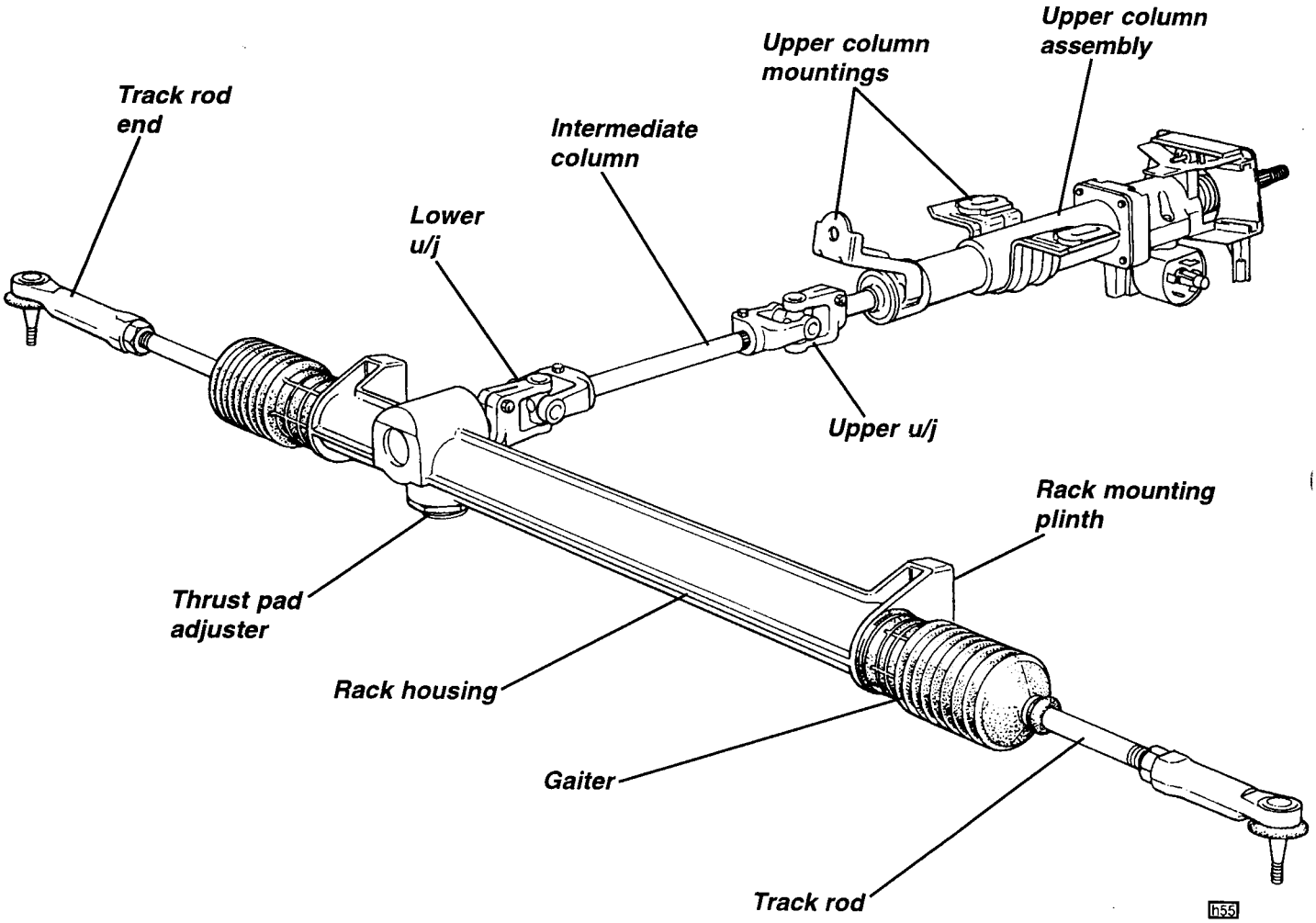

HE.1 - GENERAL DESCRIPTION

The steering system of the Elise comprises a telescopically collapsible upper column assembly, connecting to a rigidly mounted rack and pinion assembly via a universally jointed intermediate shaft. The steering rack tie rods connect to rearward facing steering arms bolted to the extruded alloy front hub carriers, with geometry providing 30% Ackermann effect, and a toe-out on bump characteristic. No power assistance is provided. The upper column is fixed to the scuttle beam, with the column upper bearing carrier also providing mountings for the steering lock and column switches. 'Break out' inserts fitted in the column upper mounting flanges, allow for telescoping of the column in a frontal collision. The steering rack assembly, which provides 2.4 turns from lock to lock at a 15.8:1 ratio, is rigidly mounted inside a chassis transverse extrusion behind the top wishbone rear pivots.

HE.2 - STEERING WHEEL

The alloy three spoke steering wheel, has a leather trimmed rim and moulded rubber covered spokes, and is secured to the column via a 36 spline boss. The horn button is mounted in the steering wheel centre pad which is supported by a collapsible steel spider bolted to the hub of the wheel. The positive feed to the horn button is supplied via a spring loaded contact housed in the column switch carrier, and a slip ring mounted on the forward side of the wheel. The earth contact of the button is connected to a terminal on the spider.

To Remove Steering Wheel

1. Pull off the centre trim pad with horn button, and disconnect the two horn leads.

2. To allow access for a steering wheel puller tool, it is necessary first to remove the column shroud:
- Release the four screws securing the shroud upper section, turning the steering wheel as necessary to permit access.
- Pull out the grommet from around the ignition switch, and remove the three screws securing the lower shroud to the column.
- If necessary, disconnect or remove the trip/panel lights control button and immobiliser socket from the lower shroud.

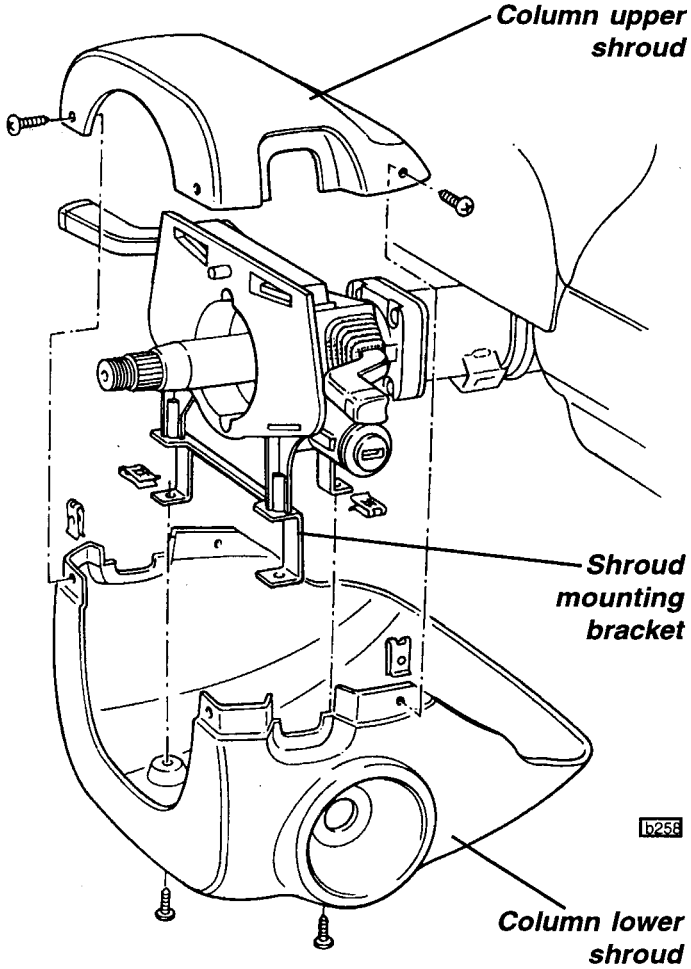

3. Remove the nut securing the steering wheel boss to the column. Match mark the boss and column to enable alignment to be maintained on re-assembly.

4. Use a suitable steering wheel puller tool to locate behind the steering wheel boss and bear against the end of the column.
CAUTION: If excessive force is applied to either the wheel or column without an appropriate puller, the telescoping mechanism of the outer column may be overridden, necessitating column replacement.

5. If necessary, unclip the slip ring from the steering wheel boss and withdraw with the horn lead. Withdraw the column bearing preload spring.

6. To refit the steering wheel, reverse the above procedure with the following notes:
- Clip the horn slip ring to the steering wheel boss with the turn indicator cancelling vane on the left hand side.
- Ensure that the column bearing preload spring is fitted over the inner column before fitting the wheel with the match marks aligned. If re-alignment is necessary, see later.
- Torque tighten the steering wheel to column nut to 25 Nm.

Steering Wheel Alignment

Ideally, the steering wheel should align in the straight running position, with the steering rack centralised and with equal track rod lengths. In practice, some compromise to track rod lengths may have to be made. To arrive at the optimum setting, proceed as follows:

Note that the only two splined joints in the steering system which allow a choice of position are the lower u/j to rack pinion shaft, and the steering wheel to column.

1. Set the front wheel alignment to specification with equal track rod lengths (see sub-section CG.2).

2. Turn the steering to each full lock in turn and set the steering wheel on the column splines such that its orientation in one full lock position is the nearest possible mirror image of its position at the opposite full lock.

Mirror image wheel positions

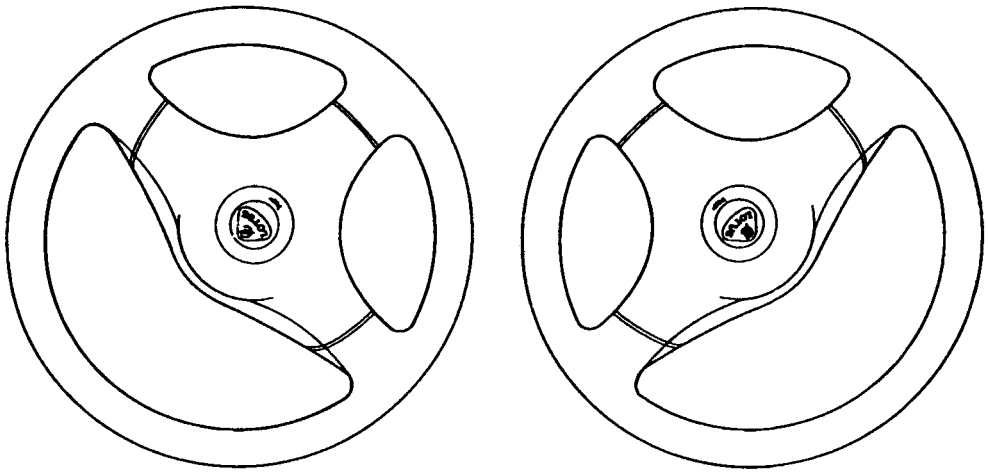

h53

3. Secure the steering wheel before road testing the car and marking the actual 'straight ahead' position of the steering wheel which should deviate from the ideal position by less than 5°. Final alignment is achieved by asymmetric adjustment of the track rods, retaining the overall toe-out setting.

HE.3 - UPPER COLUMN ASSEMBLY

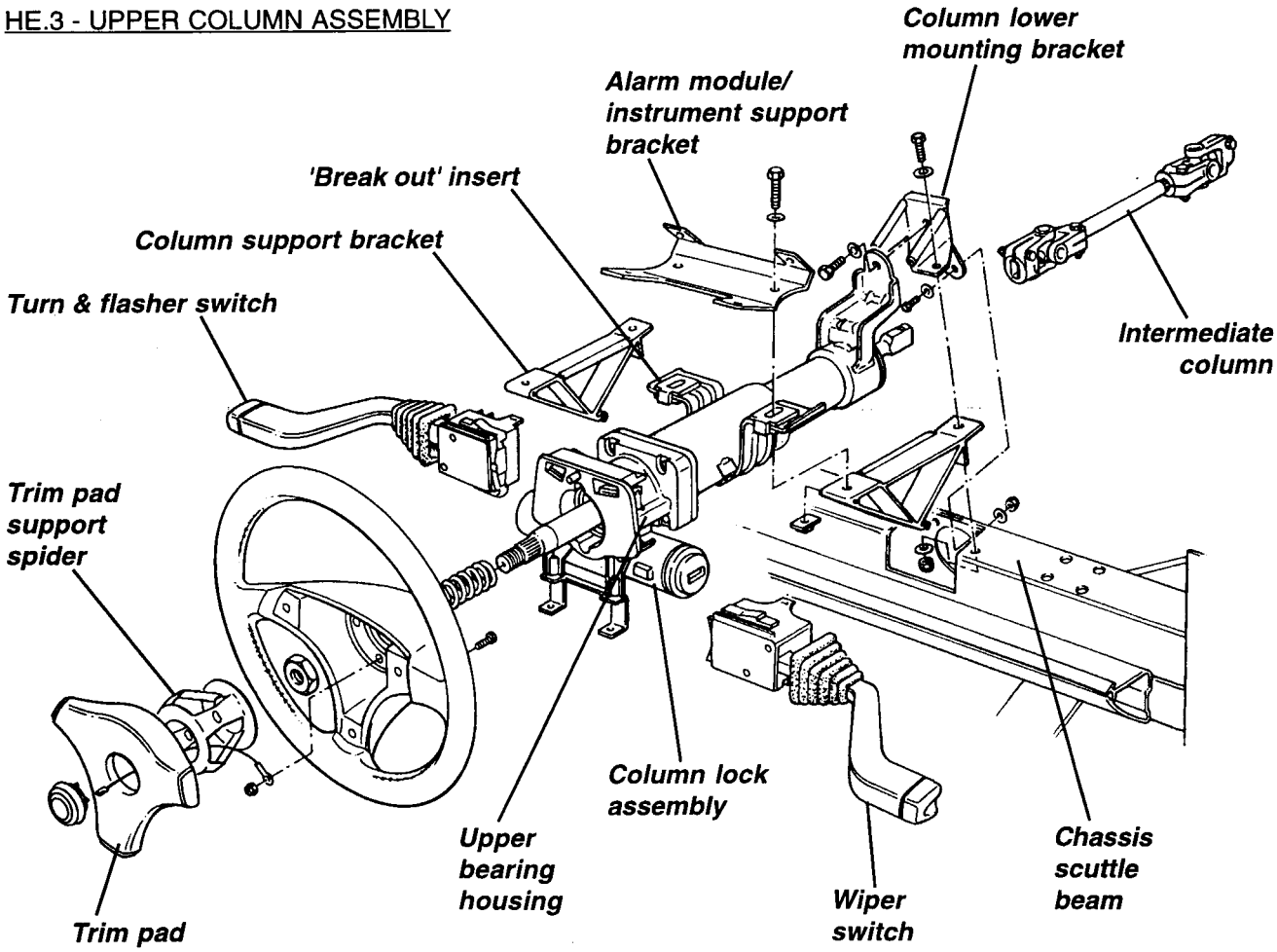

h49

The upper steering column assembly comprises an inner column which connects the steering wheel to the intermediate shaft, and a tubular steel outer column which, with its alloy upper bearing housing, supports the inner column and carries the column lever switches for lighting and wiper control, and also the ignition switch/steering lock.

Both inner and outer columns are of fixed length, but are telescopically collapsible when subjected to crash forces. The two parts of the inner column are fixed together by plastic pins designed to shear and allow telescoping to occur beyond a specified axial load. The two part outer column tube uses gripper rings to retain the column length, with the lower part mounted by a single fixing to the chassis scuttle beam via a three point fixing steel bracket. The upper part of the outer column has two open slotted mounting flanges each of which is fitted with a 'break out' alloy insert, bolted through to an extruded alloy plinth fixed to the scuttle beam. In the event of an extreme axial load being applied to the column via the steering wheel, as may occur during a vehicle frontal collision, the plastic retaining pins in the column flange inserts will shear and allow the upper part of the column to break free of the upper fixings and telescope forwards, reducing the potential for column induced injury.

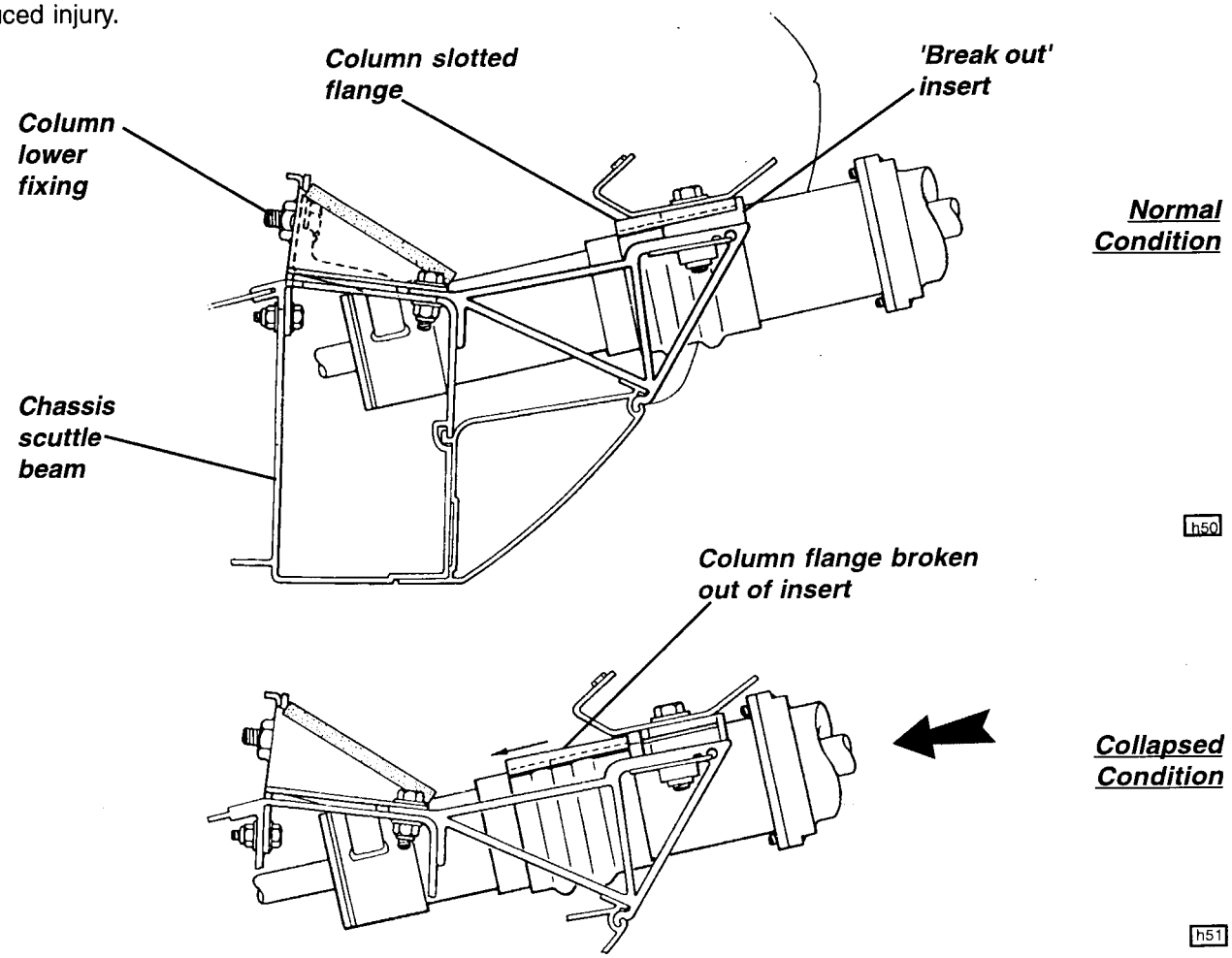

Dimensional Check

If the vehicle is involved in an accident, or any part of the column is subjected to an abnormal load, the column should be carefully examined to establish if any telescoping has occurred. Perform the following checks, and replace the complete upper column assembly if any of the dimensions are outside specification:

1. Outer Column:
   Measure the length of the lower part of the outer column as shown:
   Specification = 80 ± 1mm

2. Inner Column Lower:
   Measure the length of the exposed part of the inner column as shown:
   Specification = 58 ± 1mm

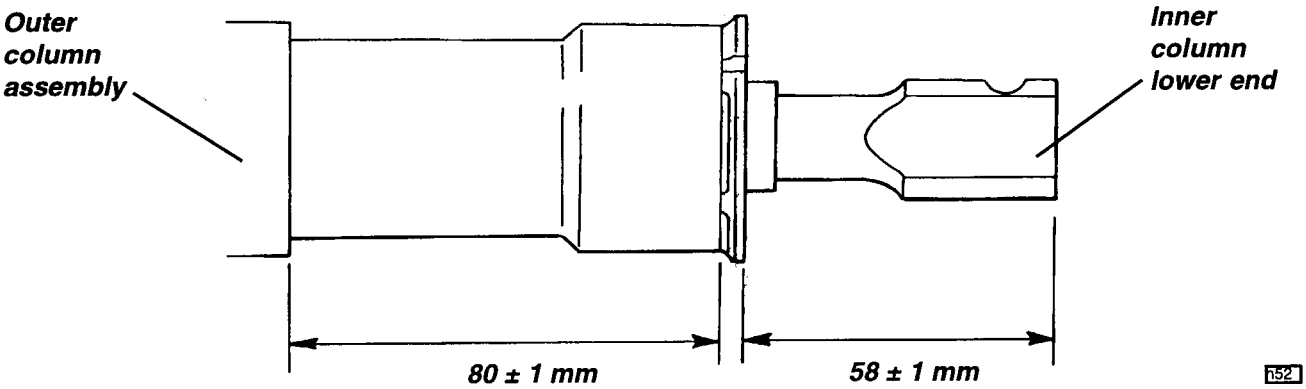

3. Inner Column Upper
   With the steering wheel removed, measure the length of the exposed part of the upper column as shown:
   Specification = 76 ± 1mm

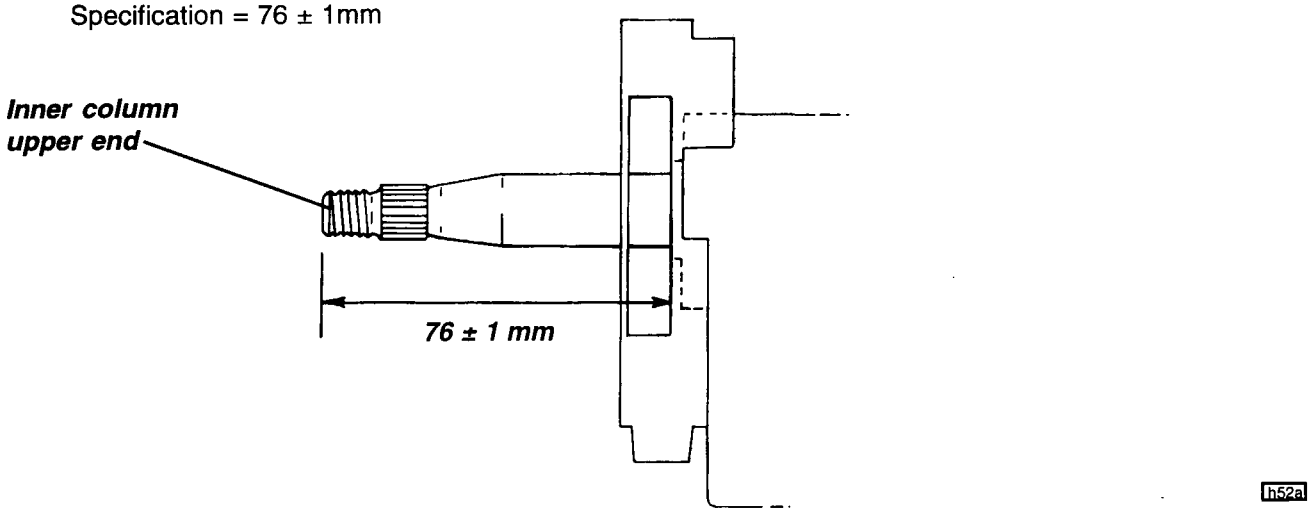

4. 'Break out' Inserts
   Remove the column shrouds and the column flange fixing bolts, and check that each of the alloy 'break out' inserts is securely attached to the column flange. If the plastic pins are sheared, the column assembly must be replaced.

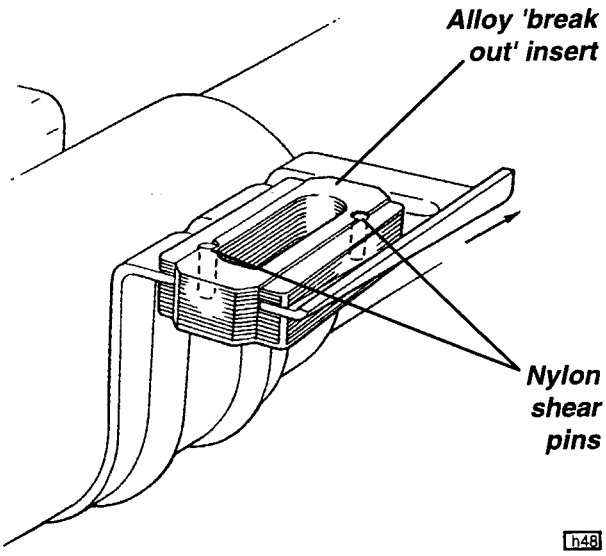

To Remove Upper Steering Column Assembly

1. Disconnect the battery, and remove the column shrouds (see sub-section HE.2).

2. Disconnect the column lever switches, or release the retaining pawls and slide the switches out of the carrier. Disconnect the horn contact pin.

3. To disconnect the ignition switch: prise open the terminal cover, and use a small screwdriver to release

the retaining barb located between the white and yellow cables. Withdraw the connector.

4. If necessary, remove the steering lock/ignition key barrel: **Turn the key to position 'I'**, depress the spring pin accessible via a hole in the column switch carrier, and withdraw the lock barrel.

5. If necessary, remove the ignition switch: **First remove the steering lock/ignition key barrel** (see above). Remove the retaining grub screw and withdraw the switch.

6. If necessary, remove the steering lock assembly: Remove the spline head screw securing the column switch carrier, and drill or chisel out the two shear head bolts fixing the lock assembly to the column.

7. Remove the pinch bolt securing the upper universal joint to the intermediate column.

8. Remove the two fixings for the instrument pack mounting brackets, and remove the instrument pack and cowl assembly after unplugging the single harness connector.

9. Unplug the Lucas 5AS module, and support the column before removing the two bolts securing the column upper mounting flanges (captive nuts). Remove the Lucas module and bracket and release the single lower column fixing.

10. Withdraw the column assembly from the scuttle and off the intermediate steering column.

11. Refit the column in reverse order to removal with the following notes:
- The groove for the pinch bolt allows assembly of the universal joint to the intermediate column in only one orientation. Torque tighten the pinch bolt to 35 Nm.
- Torque tighten the column lower fixing bolt to 45 Nm
- Torque tighten the two column upper fixing bolts to 22.5 Nm.
- If applicable, use new shear bolts to secure the steering lock assembly, and tighten until sheared.

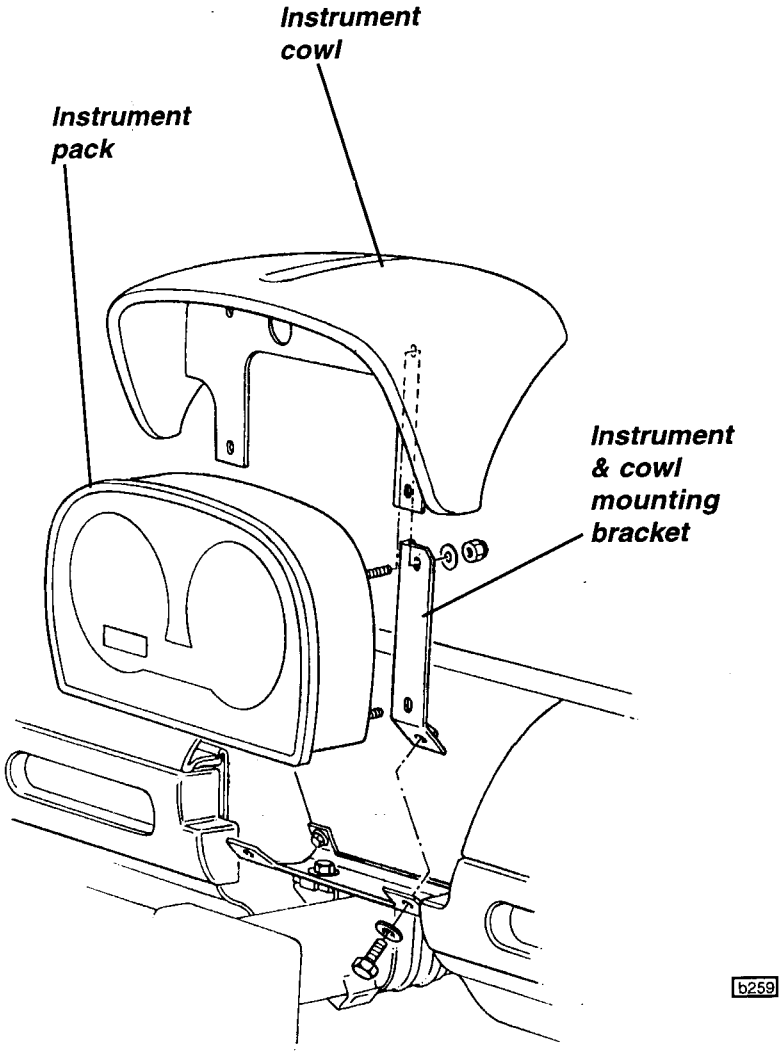

HE.4 - INTERMEDIATE COLUMN

The intermediate steering column consists of a symmetrical splined shaft and two different hookes type universal joints. The lower joint uses an un-indexed 36 spline connection to the steering rack pinion shaft, and the upper joint accommodates a double flatted boss on the end of the upper column, with a pinch bolt groove allowing assembly in only one orientation. The intermediate shaft itself, uses a splined joint at each end and an indexed pinch bolt groove.

To remove the intermediate column assembly, the upper column must first be removed (see sub-section HE.3), after which the rack pinion shaft pinch bolt may be removed and the column assembly withdrawn. Match marking the lower u/j to the pinion shaft will aid steering wheel alignment on re-assembly. Torque tighten the pinch bolts to 35 Nm.

HE.5 - TRACK ROD ENDS & RACK GAITERS

Front Wheel Alignment

Alignment is measured either by the angle a wheel makes with the vehicle centre line, or the difference in dimension between the wheel rim to wheel rim measurement at the front and rear of the wheel at hub centre height. The wheels are said to 'toe-in' when the wheel paths converge ahead of the vehicle, and 'toe-out' when they diverge. Wheel alignment is designed to vary with both steering angle (Ackerman) and suspension travel (bump steer) and should be measured only 'straight ahead' at the specified ride height.

Provision is made for the adjustment of front wheel alignment at the joint between the steering rack track (tie) rods, and the outer ball joints ('track rod ends'). The required ride height and alignment specification is detailed in sub-section CG.2.

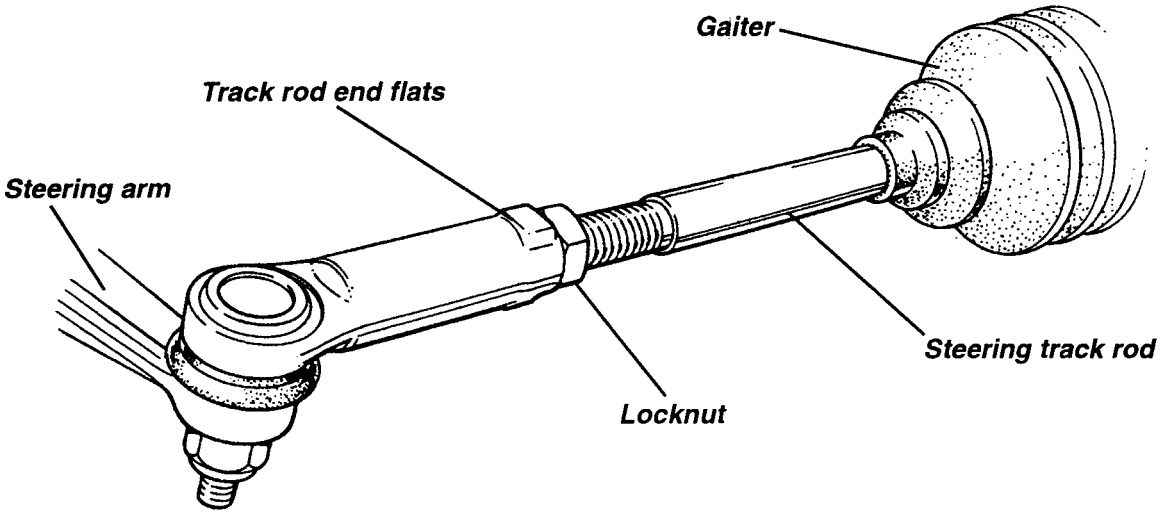

c28

Note that in order to preserve the required bump steer characteristic and steering symmetry, the effective length of each track rod must remain equal - adjust each track rod by a similar amount:

- Hold the track rod end using the flats provided, and slacken the locknut. Repeat for the opposite side.
- Turn each track rod a similar amount. As a guide, turning both track rods by one quarter of a turn will alter overall toe-out by approx. 2.0 mm.
- When adjustment is correct, hold each track rod end and tighten the locknuts to 80 - 82 Nm (58 - 60 lbf.ft).

When slackening or tightening the track rod end locknuts, it is important that the torque reaction is resisted using the track rod end flats, and that the ball joint itself is not allowed to be stressed.

Track Rod Ends

The track rod ends are sealed for life and maintenance free, but if replacement is required; remove the ball pin nut and use a ball joint splitter tool to separate the joint from the steering arm. Unscrew the joint from the track rod. On re-assembly, tighten the ball joint to steering arm nut to 30 Nm, and set the front wheel alignment as detailed in sub-section CG.2.

Steering Rack Gaiters

The convoluted gaiters sealing each end of the steering rack housing to the track rods, should be inspected at service intervals and replaced immediately if found to be torn, cracked or otherwise damaged. The ingress of dirt or water into the rack housing will cause rapid deterioration of the track rod inner ball joints and rack and pinion mechanism.

To replace a gaiter, remove the track rod end (see above), release the gaiter clips, and slide the gaiter off

the housing and track rod. Check for consequent damage or wear and replace the steering gear assembly if necessary. Fit the new gaiter into position, and secure with new retaining clips.

HE.6 - RACK & PINION ASSEMBLY REMOVAL/REPLACEMENT

The rack and pinion assembly is mounted inside an extruded chassis box section crossmember at the top front of the footwell. Each of the two rack housing mounting plinths uses an M10 (upper) and M8 (lower) fixing bolt to secure the housing to the vertical rear face of the crossmember. A steel reinforcment channel is bonded to the outide of the crossmember, with a riveted height setting plate to define the vertical position of the housing. Note that the only approved repairs or adjustments to the steering rack assembly are the replacement of the track rod ends and rack housing gaiters, and the adjustment of the rack pressure pad.

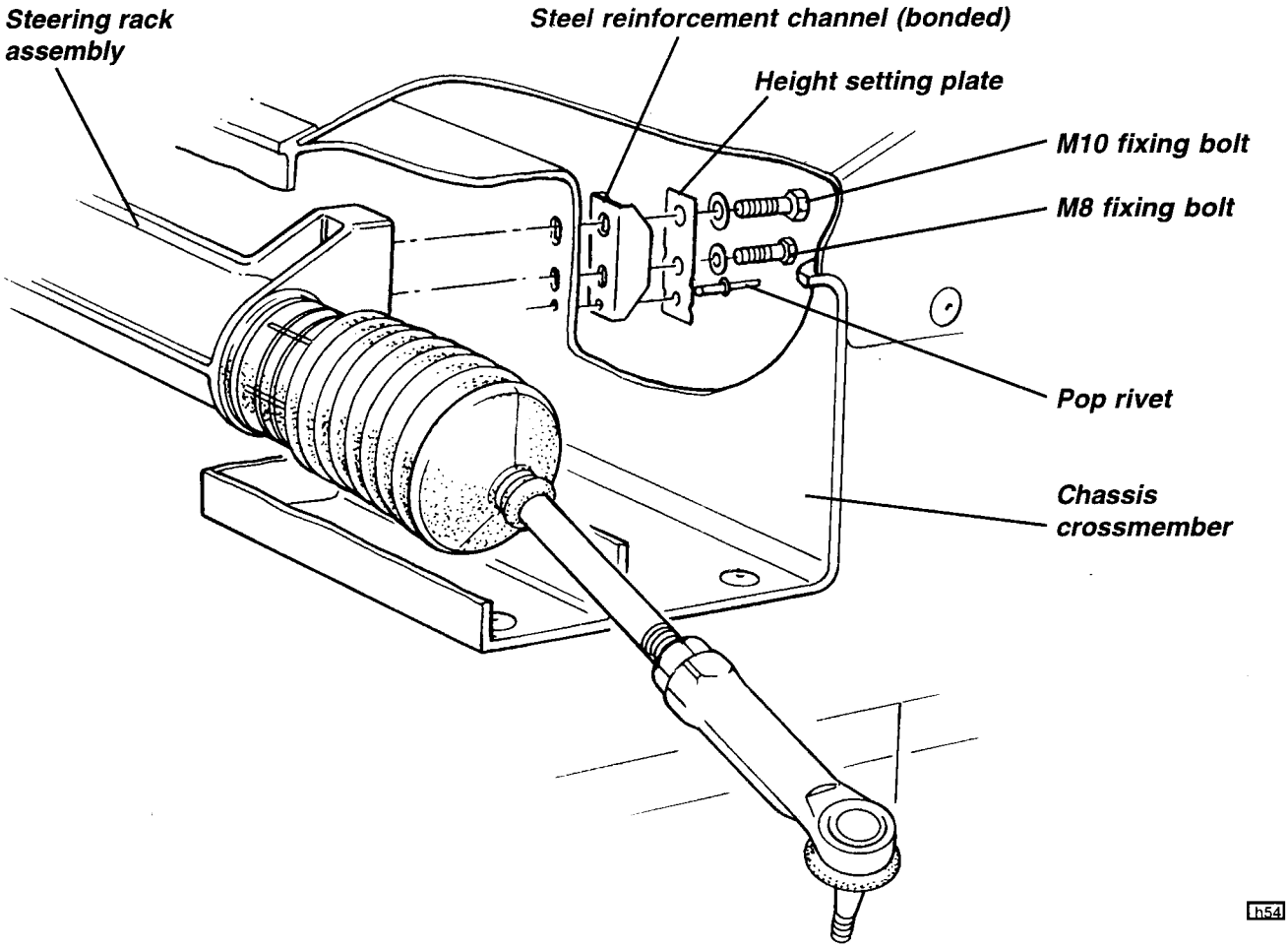

To Remove/Replace Steering Assembly

1. Remove the nut securing each track rod end to the steering arm, and use a ball joint splitter to separate the joint.

2. From inside the footwell, match mark the pinion shaft against the u/j yoke to aid steering wheel alignment on re-assembly, and remove the pinch bolt.

3. From inside the footwell, remove the two M8 and M10 bolts securing the rack housing.

4. Draw the housing forwards to disengage the intermediate shaft u/j, and manoeuvre the assembly out of the chassis crossmember.

5. On re-assembly, feed the rack assembly into the chassis crossmember and engage the pinion shaft into the lower u/j with the match marks aligned. If a new assembly is being fitted, follow the 'Steering Wheel Alignment' procedure in sub-section HE.2.

6. New fixing bolts for the steering rack housing are precoated with thread locking compound. If existing bolts are to be re-used, wire brush the threads before re-applying a suitable thread locking compound and torque tightening the M8 bolts to 22.5 Nm, and the M10 bolts to 45 Nm.

7. Fit the lower u/j pinch bolt, and tighten to 35 Nm.

8. Fit the track rod ends into the steering arms, and tighten the nuts to 30 Nm.

9. Check and adjust the front wheel alignment as detailed in sub-section CG.2.

HE.7 - ADJUSTMENT OF RACK BAR THRUST PAD

A thrust pad backed by a pair of belleville washers, is used to control the preload between the rack bar teeth and the pinion gear, and is adjustable via a theaded backstop plug. The correct preload allows the horizontally mounted rack bar (column disconnected) to be pulled through its full travel by a steady force of 12 to 16 lbf. (50 - 70 N). The rack and pinion assembly must be removed from the chassis before any adjustment may be carried out.

To adjust the thrust pad, release the locknut (36mm socket) and use a 5.5mm hexagonal bit to adjust the backstop as required before tightening the locknut. For an approximate initial setting, screw in the backstop plug until solid, then back off ½ turn.

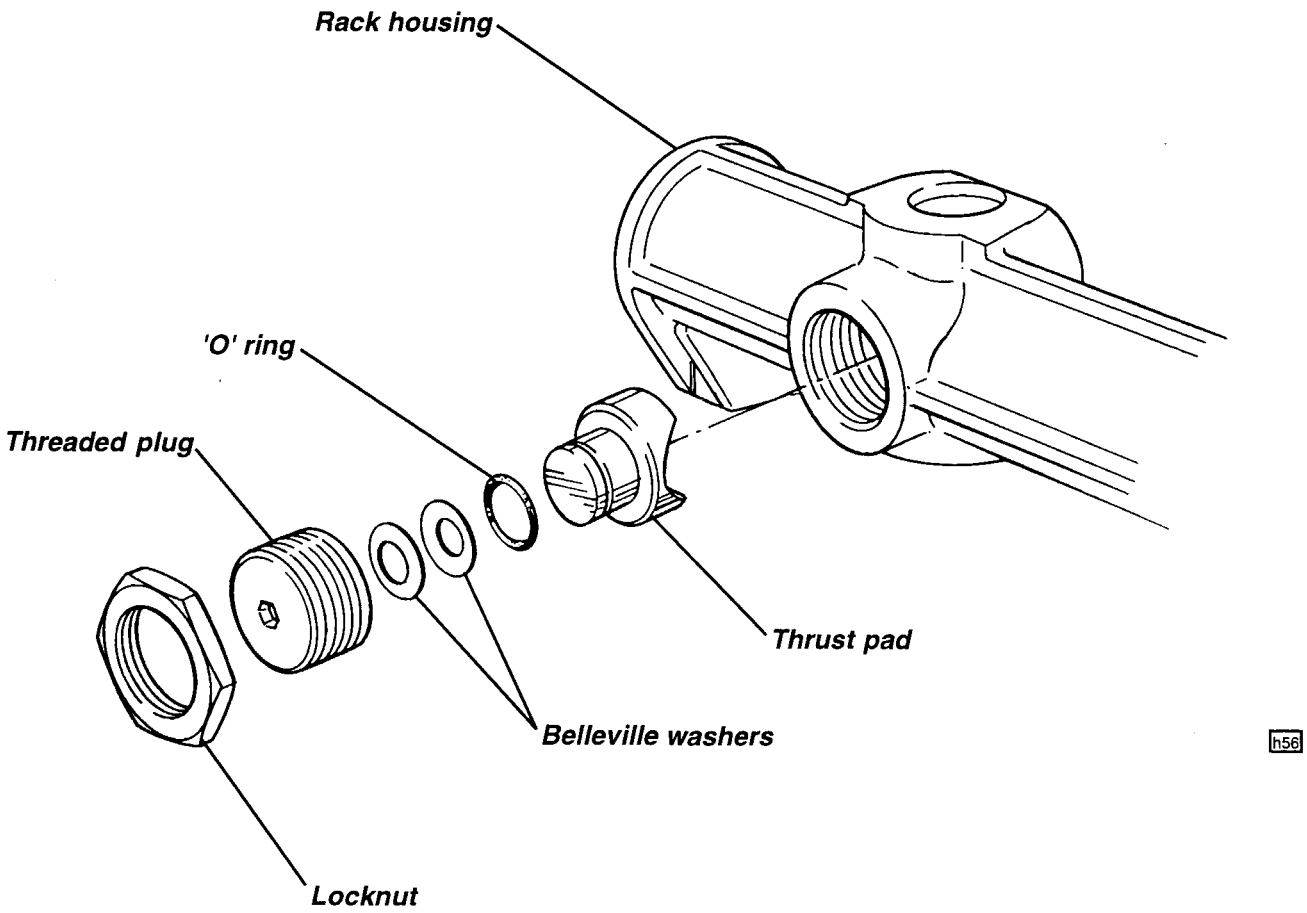

BRAKE SYSTEM & PEDAL BOX

SECTION JH - M111

	Sub-Section	Page
General Description	JH.1	3
Brake Fluid Check & Change	JH.2	3
Front Brake Pad Replacement	JH.3	4
Rear Brake Pad Replacement	JH.4	5
Parking Brake Mechanism	JH.5	6
Brake Discs	JH.6	9
Master Cylinder	JH.7	10
Pedal Box	JH.8	13
Caliper Overhaul	JH.9	15

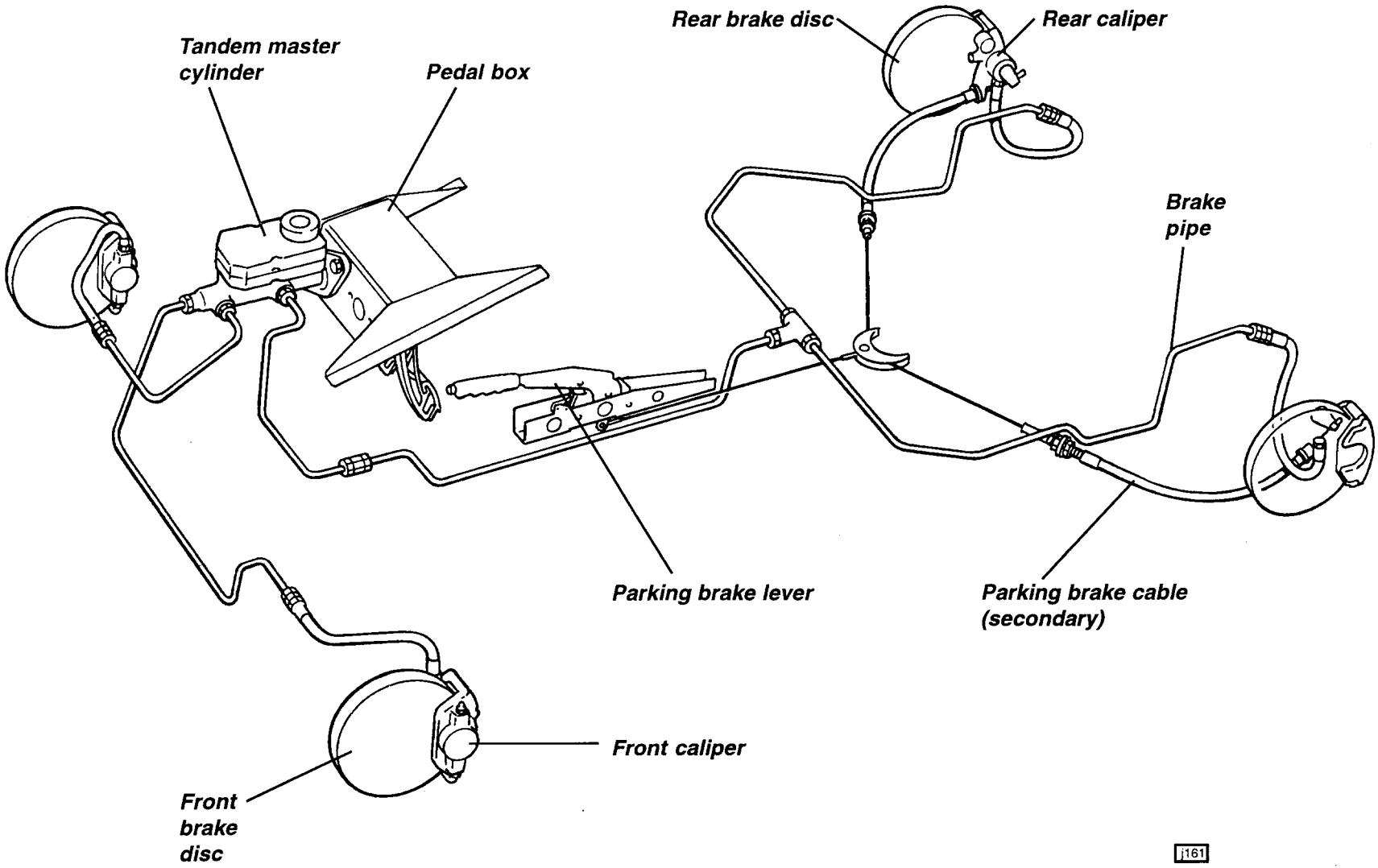

GENERAL LAYOUT

JH.1 - GENERAL DESCRIPTION

The braking system of the Lotus M111 comprises of ventilated discs all round with AP Racing 2-piston fixed calipers on the front and Brembo single piston sliding calipers on the rear. A tandem master cylinder, without servo assistance, operates the calipers via a front/rear split hydraulic circuit. The centrally mounted parking brake lever, operates the rear caliper pistons by control cables.

The AP Racing front calipers, have lightweight alloy bodies housing two opposed pistons, and are mounted via two bolts directly to the rear of the extruded aluminium alloy front hub carriers. The Brembo rear brakes use single piston sliding calipers, with cast iron bodies, mounted via an adaptor plate to the rear of each hub carrier. The rear calipers are also used on some versions of the Lotus Esprit. A common ventilated brake disc is used on all four wheels, with cars built prior to June '98 (approx. VIN W 3714) using discs constructed from a silicon carbide reinforced aluminium metal matrix. Later cars use cast iron discs, with a corresponding change in brake pad material. The discs are sandwiched between the road wheels and hubs and use no additional fixings.

The tandem master cylinder is made by ITT, and incorporates a front section to supply both front brakes, and a rear section to supply the rear brakes. A translucent fluid reservoir surmounting the cylinder, services both front and rear circuits, and also, via a linking hose, the clutch master cylinder. A fluid level sensor is incorporated into the filler cap, and lights a fascia tell tale lamp if the level becomes dangerously low.

The parking brake ratchet lever is mounted between the seats and uses a balancing linkage to actuate individual control cables to each rear caliper. Adjustment of the caliper mechanism to compensate for brake pad wear is automatic. The brake should be applied by pulling upwards firmly and fully to engage the maximum number of ratchet 'clicks'. When parking the car on a slope, the additional precaution should be taken of leaving the transmission in first or reverse gear and steering the wheels towards the kerb. If the parking brake is applied when the brakes are hot (e.g. after prolonged or vigouous braking), special care should be taken to ensure that the parking brake is securely engaged in order to allow for any potential affect on brake performance due to temperature change.

The braking system is designed to enhance brake performance during high speed driving, with good fade and pad wear characteristics, and have a higher friction level when heated to normal working temperature than when cold. Required pedal effort will reduce as cold brakes become heated to normal working temperature. After fitting new brake discs or pads, the braking efficiency will increase significantly as the brakes 'bed-in', and for cars with aluminium discs, as a deposit of the brake pad material builds on the part ceramic discs, characterised by a dull grey band around the rubbing surface. Maximum braking efficiency will be achieved if, for the first few hundred miles, needless heavy braking is avoided, and the brake pads are allowed to 'bed in' fully before being used to their full potential.

JH.2 - BRAKE FLUID CHECK & CHANGE

Before checking the brake fluid level, ensure that the car is parked on a level surface, and remove the front bonnet. The level of fluid in the reservoir may be inspected without disturbing the filler cap, and should lie between the 'MIN' and 'MAX' marks moulded on the transluscent reservoir body. The level will fall progressively as the brake pads wear in service, and should be checked at each service interval. A sensor incorporated into the filler cap will light a fascia mounted tell tale lamp if the level becomes dangerously low. As a bulb check, the tell tale should light for about six seconds when the ignition is first turned on, but may also be tested by pressing the button on the filler cap, which action should light the tell tale with the ignition switched on.

An internal baffle divides the reservoir into two compartments, with the front section supplying the front brake circuit, and the rear section the rear brakes in addition to, via a short linking hose, the clutch master cylinder. Service wear of the clutch friction plate will cause fluid to be displaced from the self adjusting clutch slave cylinder, back to the reservoir, and will counteract to some extent the dropping of the level due to brake pad wear.

If the reservoir needs topping up, first clean around the cap to reduce the possibility of contamination before unscrewing the cap; it is not necessary to disconnect the level sensor cables. Take suitable precautions to guard against damage to paintwork caused by brake fluid dripping from the level sensor.

Use only a fresh supply of DOT 3 or DOT 4 ***non-mineral*** type fluid, identified by a yellow and black symbol.

j146

Do NOT use DOT 5 silicone fluid, or any fluid which has been exposed to the atmosphere for more than a brief period, or any fluid suspected of being wet, dirty or contaminated. Do not overfill. Replace the filler cap securely.

Some service operations, such as replacing brake pads, will result in the displacement of fluid from the hydraulic circuit back into the reservoir. In order to prevent fluid overflowing from the reservoir, it may be necessary to remove some fluid using a 'squeeze bulb' type tool.

Renewal of Brake Fluid

Brake fluid aborbs water from the atmosphere over a period of time (hygroscopic), resulting in a lowering of the boiling point of the fluid, and corrosion of the hydraulic system. For optimum safety and brake performance, the brake fluid should be renewed every twelve months.

The fluid may be changed and bled of air using pressure or vacuum assisted equipment, or standard manual techniques. Each brake caliper is provided with a bleed nipple for this purpose. The clutch release system hydraulic fluid should be changed at the same time.

JH.3 - FRONT BRAKE PAD REPLACEMENT

Pad thickness may be checked with the wheel removed without disturbing the caliper.

	Alloy discs	*Iron discs*
Standard pad thickness (excluding backplate);	10.0 mm	9.0 mm
Minimum pad thickness (excluding backplate);	2.5 mm	2.5 mm

If the thickness of any pad is below the specified minimum, the axle set of pads should be renewed. Note that different brake pads are used for aluminium and iron discs.

Aluminium discs: These pads are identified by a stencilled number on the backplate commencing with 'BXD'. If desired, self adhesive anti-squeal overlays (A111J0122F) may be fitted to the pads after approx. 0.75mm of wear has taken place, but some loss of pedal 'feel' will be incurred.

Iron discs: These pads are factory fitted with anti-squeal overlays and marked 'Brembo 07.5505.30/40'. The overlay is assymetric and is marked with a directional arrow - ensure the arrow on all four pads points in the direction of forward disc rotation.

1. To remove the brake pads; Remove the securing split pin and withdraw the lower of the two pad retaining pins, taking precautions to restrain the anti-rattle spring. Remove the second retaining pin and the anti-rattle spring plate. Withdraw the pads from the caliper. Measure the lining thickness and renew the axle set of pads if any lining is below 2.5 mm.

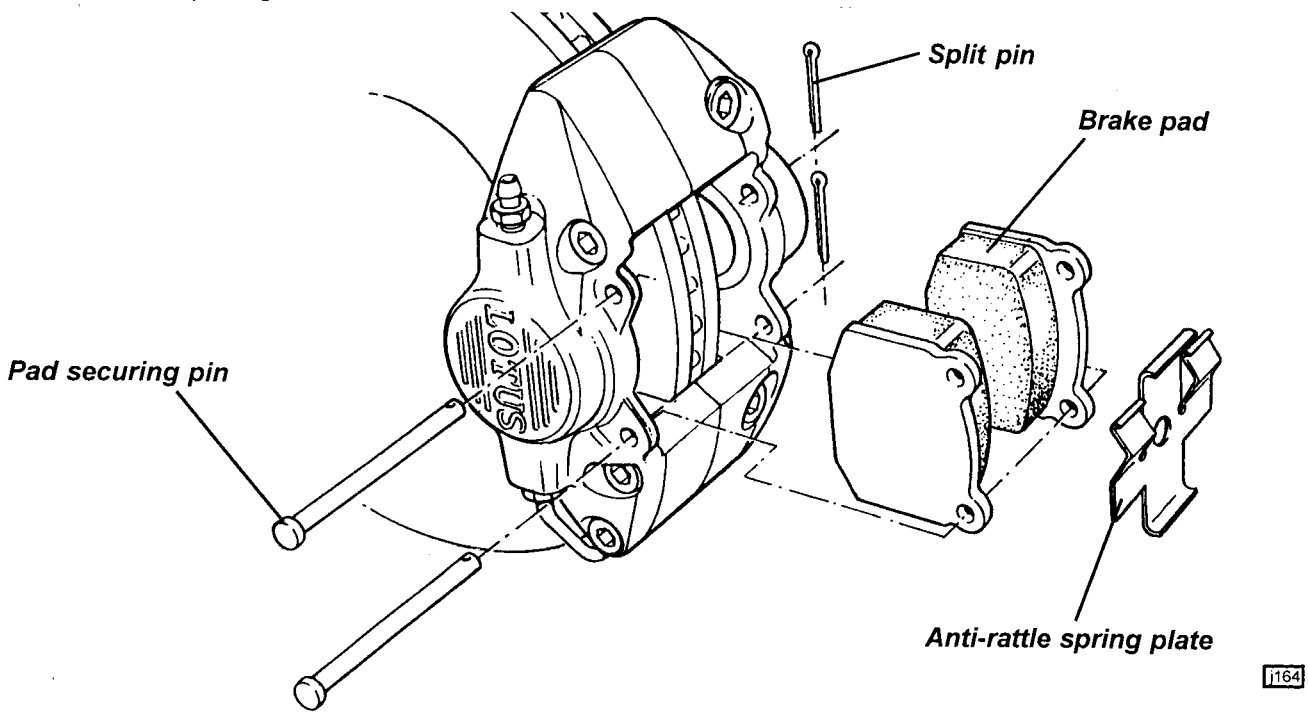

2. Before replacing the pads, inspect the caliper for any signs of fluid leakage from a piston seal or joint, and replace the caliper if any such signs are evident. Clean the pad recess in the caliper taking suitable precautions to protect from dust inhalation.

3. If refitting the existing brake pads, refit each pad in the same position as originally fitted.

4. If fitting new pads, the pistons must be pushed back into the caliper to provide the necessary clearance. This action will return fluid to the master cylinder such that some fluid may need to be removed in order to prevent overflowing. Take care to avoid damaging the brake disc surface, or distorting the disc.

5. Position the pads in the caliper, and insert the upper pad retaining pin from the outboard side. Secure with the split pin.

6. Fit the anti-rattle spring into position with the side tangs pressing against the top end of the pad backplates, and the centre tang beneath the retaining pin. Insert the second pad retaining pin into the caliper, passing over the lower central anti-rattle spring tongue.

7. Before driving the car, press the brake pedal several times to bring the pads to their correct running position. Top up the master cylinder reservoir if necessary to bring the level to the 'MAX' mark.

8. Ensure the customer is made aware that maximum braking efficiency will be achieved if, for the first few hundred miles, needless heavy braking is avoided, and the brake pads are allowed to 'bed in' fully before being used to their full potential.

JH.4 - REAR BRAKE PAD REPLACEMENT

Pad thickness may be checked after removing the road wheel, without disturbing the caliper.

	Alloy discs	*Iron discs*
Standard pad thickness (excluding backplate);	7.8 mm	6.5 mm
Minimum pad thickness (excluding backplate);	2.5 mm	2.5 mm

If the thickness of any pad is below the specified minimum, the axle set of pads should be renewed. Note that different brake pads are used for aluminium and iron discs.
Aluminium discs: These pads are identified by a stencilled number on the backplate commencing with 'BXD'. If desired, self adhesive anti-squeal overlays (A111J0122F) may be fitted to the pads after approx. 0.75mm of wear has taken place, but some loss of pedal 'feel' will be incurred.
Iron discs: These pads are factory fitted with anti-squeal overlays and marked 'Brembo 07.7236.20.

Tools Required:
Piston Retraction Tool T000T1242

1. Remove the rear road wheels.

2. At each rear corner: using a suitable pin punch, knock the pad retaining pin out of the caliper towards the outside, taking precautions as necessary to restrain the anti-rattle spring from flying off as the pin is withdrawn.

3. Remove the anti-rattle spring, and withdraw both brake pads from the caliper. Measure the thickness of the lining material, and renew the axle set of pads if any are below 2.5 mm.

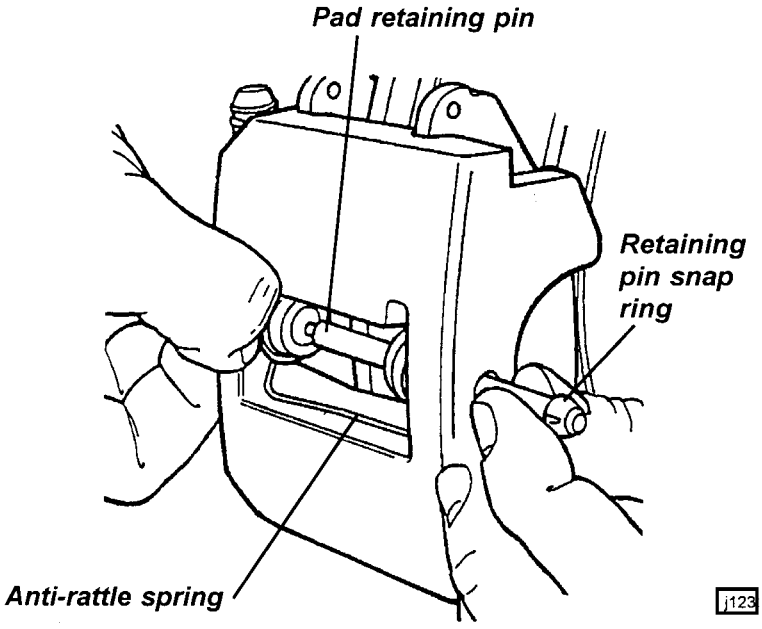

4. Before refitting the pads, inspect the piston boot for splits, cracks or other damage, and for any signs of fluid leakage or wetness. If any such signs are apparent, the complete caliper should be replaced as Brembo do not recommend that this caliper be dismantled.

5. If refitting the existing brake pads, refit each pad in the same position as originally fitted.

6. Before fitting new rear pads, the caliper piston must be screwed back into the caliper down the parking brake actuation mechanism. This operation requires the use of special tool T000T1242 and the removal of the brake disc:
   - Remove the single socket head screw retaining the brake disc, and remove the disc.
   - Fit special tool T000T1242 into the holes in the caliper piston, and screw the piston back down the parking brake mechanism screwthread until fully bottomed.
   - Refit the brake disc, and tighten the countersunk retaining screw to 12 Nm.

7. Slide the brake pads into the caliper. Position the pad anti-rattle spring in the caliper aperture, with the spring ends located in the recesses provided. Ensure that the spring is fitted the correct way up, with the turned spring end in the longer recess. Press the spring eyes into alignment whilst the pad retaining pin is inserted through the caliper from the outside. Ensure that the pin passes through both eyes of the anti-rattle spring, and both brake pads, and that the pin is fully installed with the snap ring seated in the outboard side of the caliper.

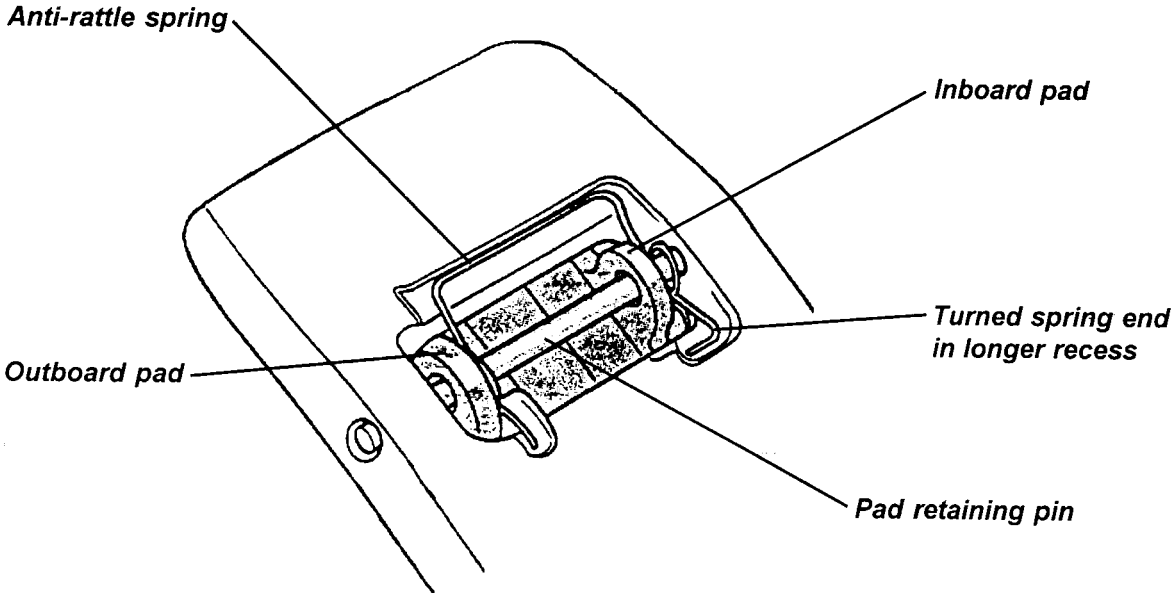

j124

8. Refit the roadwheels and press the brake pedal several times to set the brake pad position. Before switching on the ignition, check the fluid level in the reservoir and top up if necessary.

9. Ensure the customer is made aware that maximum braking efficiency will be achieved if, for the first few hundred miles, needless heavy braking is avoided, and the brake pads are allowed to 'bed in' fully before being used to their full potential.

JH.5 - PARKING BRAKE MECHANISM

Operation of the handbrake lever applies a pull to a short link cable which connects via a horseshoe compensator to the centre of a single cable linking the two rear calipers. At each caliper, the cable connects to a lever which operates the hydraulic piston by mechanical means:

Movement of the caliper lever causes rotation of one of a pair of steel discs, rotation of the other being restrained by a stop bolt in the cylinder. Hardened balls housed in ramps machined in the discs, force the discs

apart, and in so doing, apply an axial force to the piston via a screwthread and nut. The nut is restrained in the piston by a one way clutch which grips the nut when the parking brake is applied, but allows it to turn when the mechanism relaxes, or when the piston is operated hydraulically by the footbrake. In this way, the mechanical mechanism is adjusted automatically to compensate for pad wear.

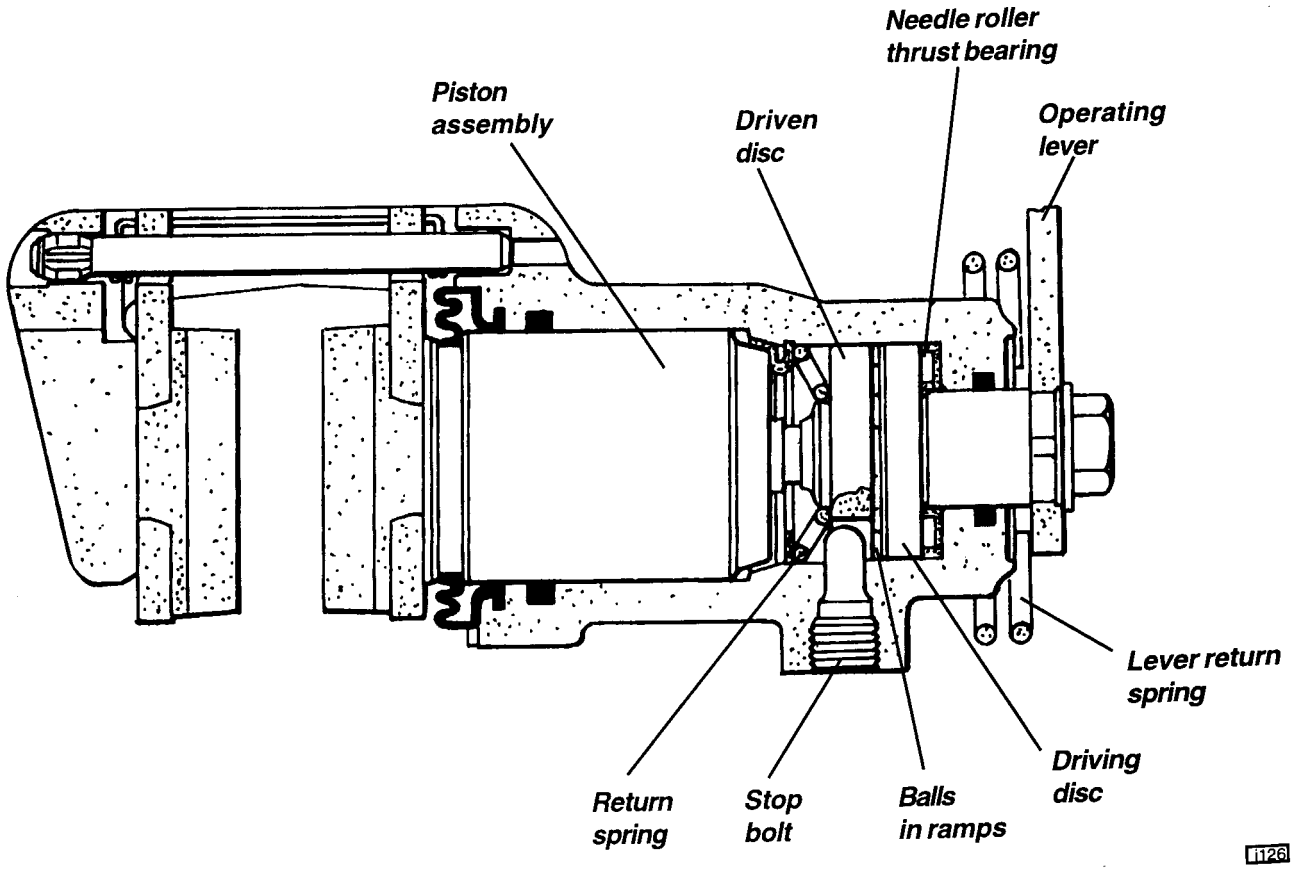

For the auto adjustment system to function correctly, it is essential that each caliper parking brake lever is allowed to return fully when the brake is released, and is not prevented from doing so by maladjustment of the parking brake cable. To check that the caliper levers are fully returned; with the parking brake 'off', measure the distance between the cable abutment and caliper lever as shown.

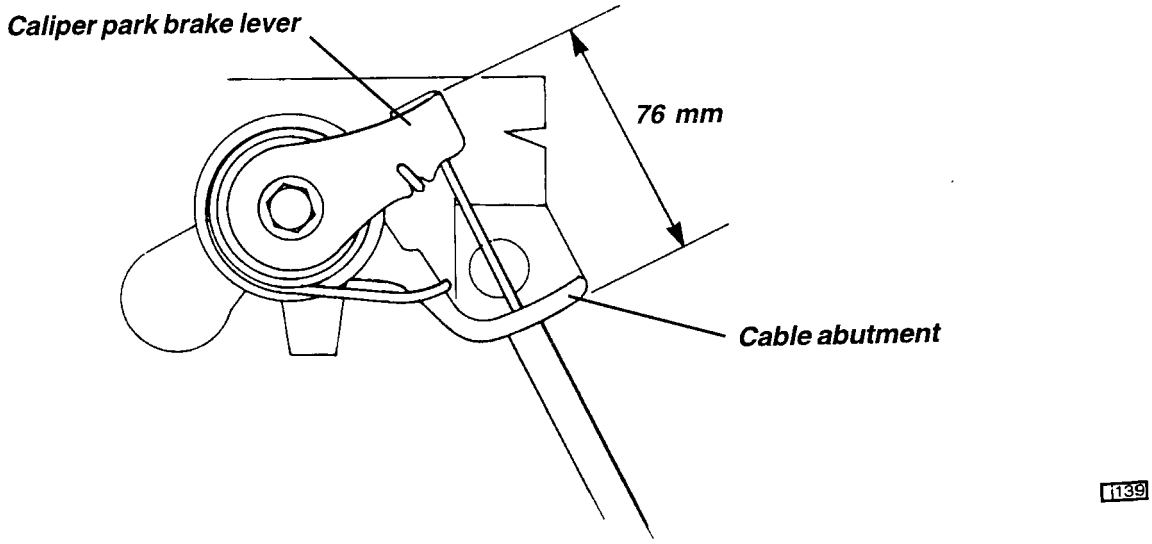

After verifying this dimension, any slack in the rear cable may be adjusted out at the left hand outer cable abutment, which is integral with the pivot bracket for the front leg of the lower wishbone. If fitted, the diffuser/ undertray must be removed for access. After adjustment, re-check the caliper lever 'off' dimension.

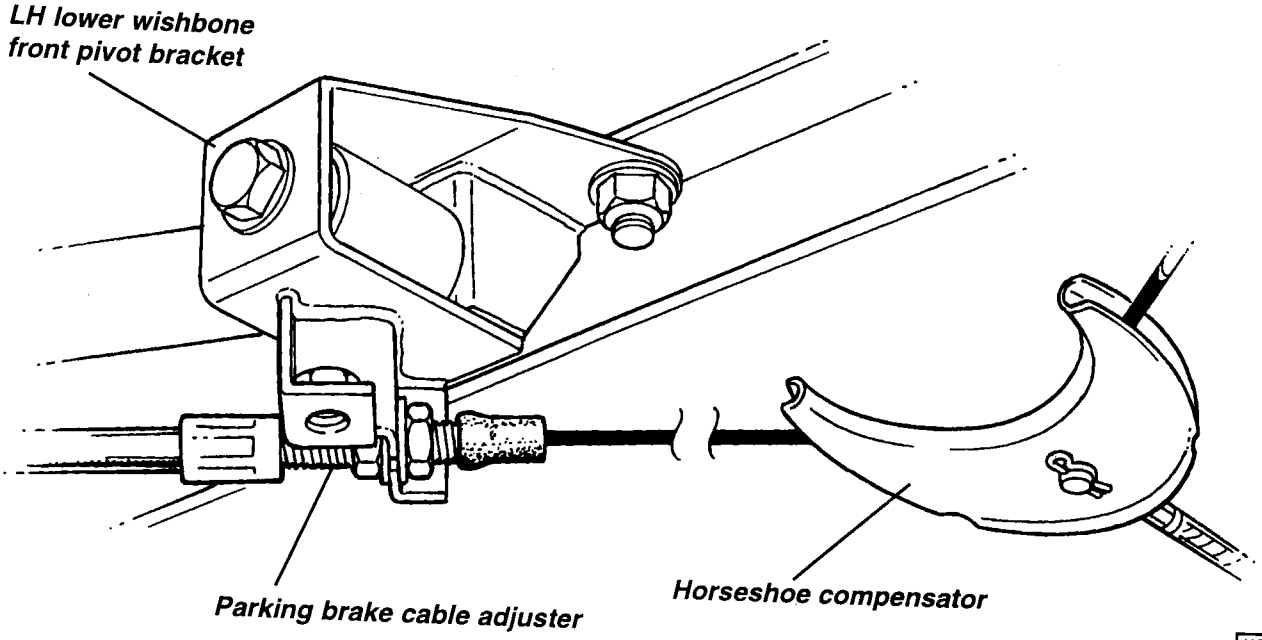

The parking brake lever is sandwiched into a mounting bracket by two flat head bolts securing the ratchet plate. The mounting bracket (in conjunction with the gearchange lever bracket) is not drive handed, but is offset, via alternative fixing holes in the chassis, *towards the passenger side.* The ratchet pawl operates a micro switch to light the 'brakes' tell tale lamp in the instrument panel whenever the ignition is switched on and the parking brake is applied. The short front cable is secured to both the lever assembly and the compensator horseshoe by clevis pins with retaining 'R' pins.

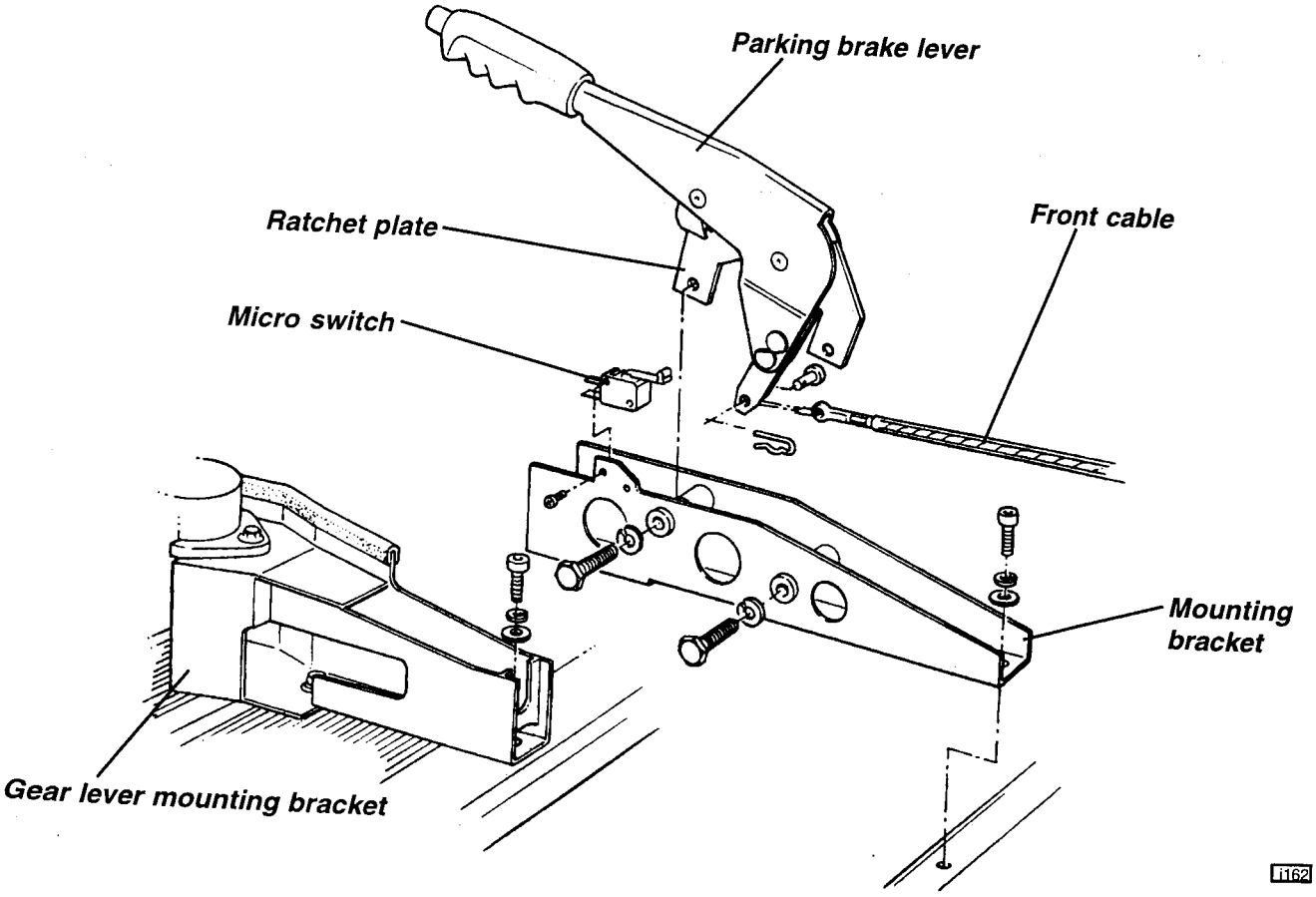

JH.6 - BRAKE DISCS

All four wheel brakes utilise a common brake disc which is sandwiched between each wheel and its hub, being centralised by the hub spigot, and transmitting torque via the clamping force of the road wheel studs. No separate disc fixings are used. The discs are made from an aluminium metal matrix, incorporating silicon carbide, and must only be used in conjunction with the special brake pad material specified. A deposit from the brake pads, which builds up on the swept area of the discs with use (and is evidenced by a dull grey band), contributes to the friction characteristic and braking efficiency.

The condition of the brake disc friction surface is a major factor in brake performance and feel, with a good surface quality and minimal run-out and thickness variation being required. After an extended lay up, some surface corrosion may develop on the discs which will cause a degradation in braking quality until the surfaces are cleaned up by normal brake action. Excessive run-out or thickness variation as a result of overheating or extended wear, may cause brake judder and/or extended pedal travel due to pad 'knock off'. Scoring and ridging of the braking surfaces will be exacerbated by operation in dusty or unmade road environments, and will reduce braking performance.

No skimming or re-surfacing of the brake discs is permitted. If the disc becomes badly scored, or is out of specification in any way, it should be renewed. NOTE: Ensure that there is no discernible free play in the wheel bearings before attempting to measure brake disc run-out.

Brake disc thickness

New	26.0 mm (1.02 in)
Service minimum	24.9 mm (0.98 in)

Runout

New maximum	0.03 mm (0.001 in)

Front Disc Replacement

1. Remove the road wheel.

2. Remove the two bolts securing the brake caliper to the hub carrier, and withdraw the caliper from the disc. Secure clear without straining the flexible hose.

3. Withdraw the disc from the hub.

4. Before re-fitting a disc, ensure that the mating face between disc and hub is scrupulously clean. Mount the disc onto the hub and locate over the wheel studs.

5. Apply Permabond A131 (A912E7034) to the threads of the caliper fixing bolts. Fit the caliper over the disc and secure to the hub carrier with the two bolts.
   Note that the outermost of the alternative fixing holes in the hub carrier are used. Tighten to 45 Nm (33 lbf.ft).

6. Refit the road wheel and operate the brakes before driving the car to set the brake pad position.

Rear Disc Replacement

Replacement of the rear discs is similar to that for the front discs, except that if the brake pads are removed, it is not necessary to remove the brake caliper to enable the disc to be withdrawn from the hub.

JH.7 - BRAKE MASTER CYLINDER

The tandem brake master cylinder is mounted in the front compartment and is secured to the pedal box by two M8 bolts. To remove the unit, proceed as follows:

1. Syphon fluid from the reservoir to reduce spillage.

2. Disconnect the clutch master cylinder supply hose from the reservoir and plug the hose.

3. Release the three brake pipes from the master cylinder, and plug the pipes and ports.

4. Release the master cylinder from the pedal box:
   - The top fixing bolt uses a Nyloc nut and flat washer on the inside of the box.
   - The lower fixing bolt uses a captive nut plate within the pedal box.

To Replace Seals

1. Thoroughly clean the exterior of the master cylinder assembly before commencing, in a clean environment, any dismantling operation.

2. Carefully withdraw the fluid reservoir spigots from the master cylinder grommets.

3. Remove the pushrod boot and the front piston stop bolt and washer.

4. Using a rounded end mandrel, press the rear piston into the cylinder sufficiently to relieve load on the cylinder end circlip. Remove the circlip and stop washer, and carefully remove the pistons and springs from the cylinder. If necessary, knock the cylinder against a wood or plastic surface to extract the front piston assembly.

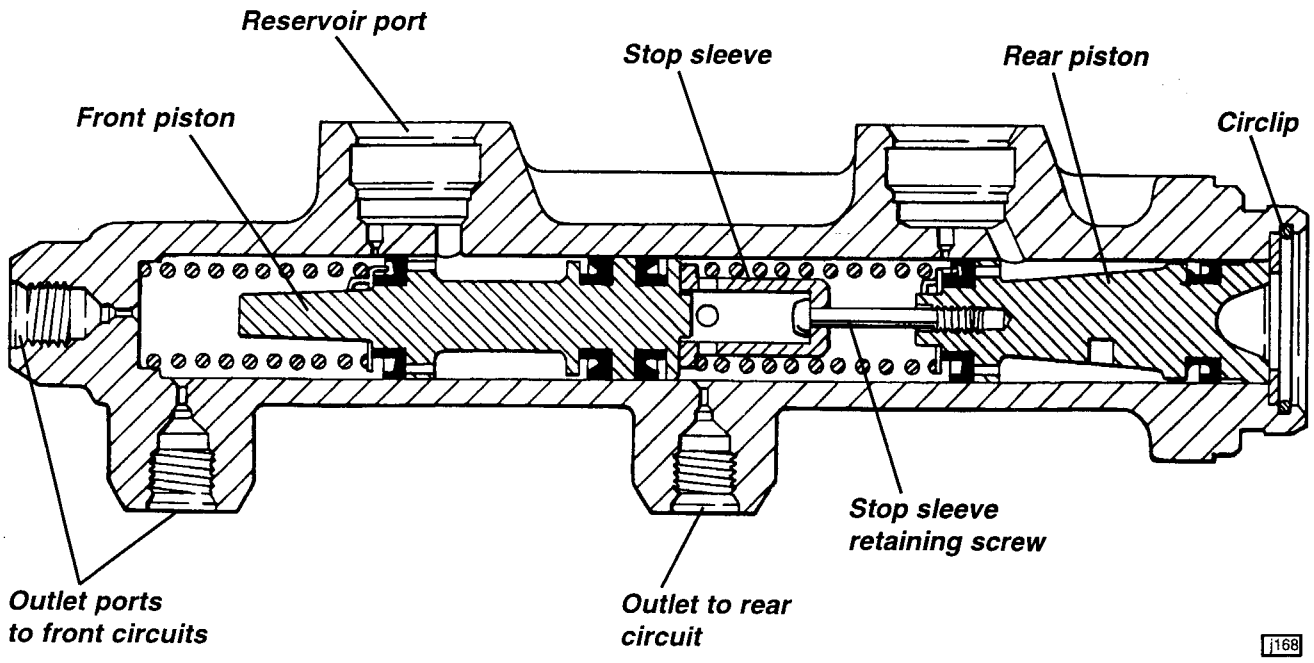

5. Press the stop sleeve against the rear piston and release the screw retaining the sleeve. Remove the stop sleeve, screw, spring and spring seat washer. Carefully remove the primary seal and grooved seal from the rear piston.

6. From the front piston, remove the primary seal and the two secondary seals.

7. Thoroughly clean the cylinder bore, inlet and outlet ports, and all component parts using brake cleaning fluid or alcohol and blow dry with compressed air. Carefully inspect the master cylinder bore for scoring and corrosion. Any more than the slightest signs of either of these effects indicates that the unit should be renewed.

8. Thinly coat the cylinder bore with ATE Brake Cylinder Paste or ATE Brake Assembly Spray or a similar product, to facilitate assembly and prevent corrosion.

9. Before assembling the seals onto the pistons, note that three different seals are used, with the part number printed on the lip of each seal.

Primary seal	03.3301-1933.1
Secondary seal	03.3301-1934.1
Grooved seal	03.3402-1901.1

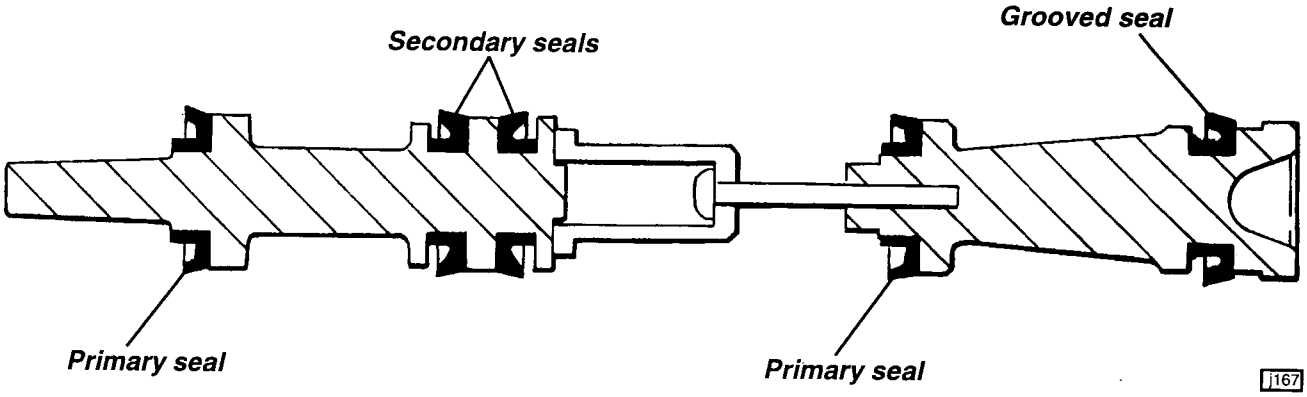

10. Assemble the front piston:
- Fit a primary seal (03.3301-1933.1) into the front groove of the piston with the lip facing forwards.
- Fit the support ring onto the piston nose to retain the seal and form a seat for the cylinder front spring.
- Fit a pair of secondary seals (03.3301-1934.1) into the two grooves at the rear end of the piston, with the lip of the front seal facing forwards, and the lip of the rear seal facing rearwards.

11. Assemble the rear piston:
- Fit a grooved seal (03.3402-1901.1) into the rear groove with the lip facing forwards.
- Fit a primary seal (03.3301-1933.1) onto the front of the piston with the lip facing forwards.
- Fit the spring support ring onto the piston spigot, spring and stop sleeve, and compress the spring to enable the retaining screw to be fitted and tightened.

12. Thinly coat all piston seals and the piston shoulders with ATE Brake Cylinder Paste or ATE Brake Assembly Spray or similar.

13. Fit the front piston return spring onto its seat on the front piston, and carefully insert the front piston assembly into the cylinder taking great care not to damage the lips of the forward facing seals.

14. Fit the rear piston assembly into the cylinder, again taking great care not to damage the lips of the forward facing seals. Using a rounded end drift, press the piston against its spring to enable the stop washer and retaining circlip to be fitted into the end of the cylinder.

15. Thinly coat the two reservoir spigots and sealing grommets with ATE Brake Cylinder Paste or ATE Brake Assembly Spray or similar, and insert the grommets into their locations in the master cylinder body. Fit the reservoir to the master cylinder with the two spigots fully inserted into their grommets. Ensure that the cap is positioned towards the rear with the clutch fluid take off on the left.

16. Lubricate the pushrod boot with rubber grease before fitting onto the end of the master cylinder, with its lip correctly located in the groove.

17. Fit the master cylinder assembly to the pedal box, inserting the brake pedal pushrod through the master cylinder boot to engage into the hollow of the rear piston. Retain with the two M8 bolts and tighten to ?? Nm (?? lbf.ft).

18. Check the pushrod length:
The pushrod length must be adjusted to apply a slight preload to the master cylinder with the pedal released. Too much preload will not allow the reservoir port to open. Too little preload will allow free play and a rattle from the pedal:
   - Remove the locking grub screw (3 mm key) in the end of the pedal trunnion, apply Permabond A131 threadlock, and refit loosley;
   - Screw the pushrod into or out of the trunnion until the pedal just contacts the pedal box flange (upstop).
   - Apply ½ turn of preload to the pushrod, and tighten the trunnion lock screw to 5 Nm.

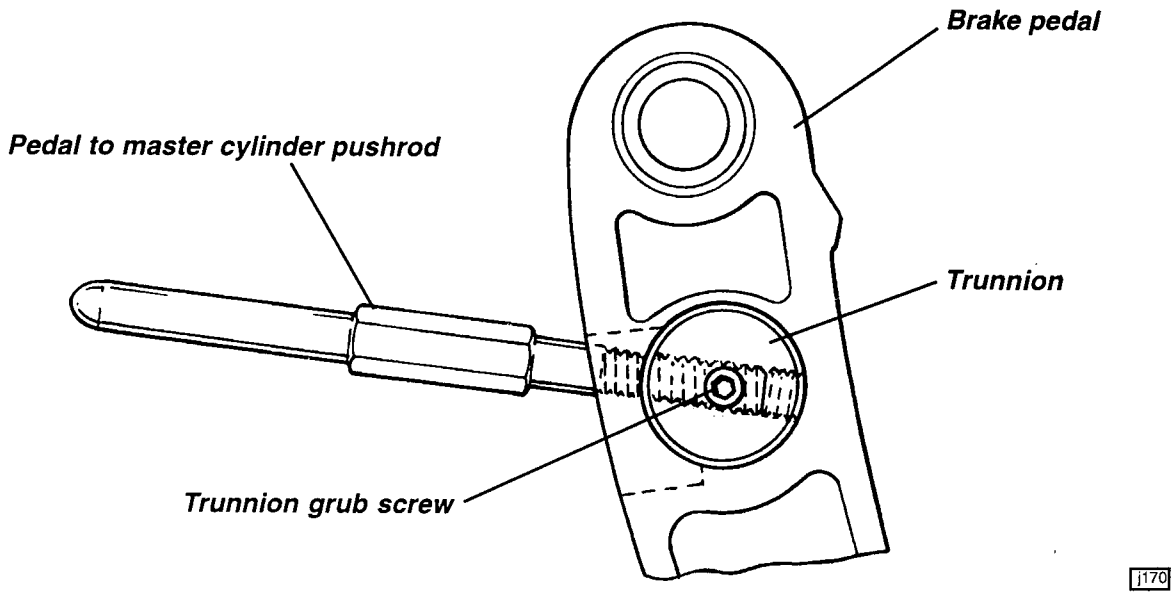

19. Check the stop light switch adjustment: With the pedal released, check that the switch plunger is depressed, with about 1 mm of the white plunger visible. If necessary, twist the switch body 90° counterclockwise to release from the quickthread, and reset its position to achieve specification.

20. Connect the brake pipes to the cylinder; rear circuit to the rear port, front circuits to the two front ports. Fit the clutch fluid supply hose to the reservoir spigot.

21. Fill the reservoir with DOT 4 non-mineral type brake fluid, and bleed the complete brake system of air using standard vacuum assisted, pressure assisted or manual techniques.

JH.8 - PEDAL BOX

The extruded aluminium alloy pedal box is secured to the chassis scuttle via six horizontally disposed M6 screws, three fixing each side of the box to a vertical bracket, itself bonded and rivetted to the chassis. An steel pivot shaft is clamped into the pedal box, and serves all three pedals, which are themselves common extrusions, with the throttle pedal being a narrower section than that used for the brake and clutch. The brake and clutch pedals use cylindrical coated alloy trunnions to actuate their master cylinder pushrods, with the bore for the brake pedal trunnion being machined nearer to the pedal pivot than in that for the clutch pedal. The top end of each pedal uses maintenance free, self lubricating, plastic pivot bushes, and an extruded footpad is bolted or rivetted to the bottom end of the pedal. The throttle pedal uses a ball jointed rod, and multiplier lever to operate a throttle control cable which is routed along the cockpit centre, beneath the gear lever and parking brake lever trim panels.

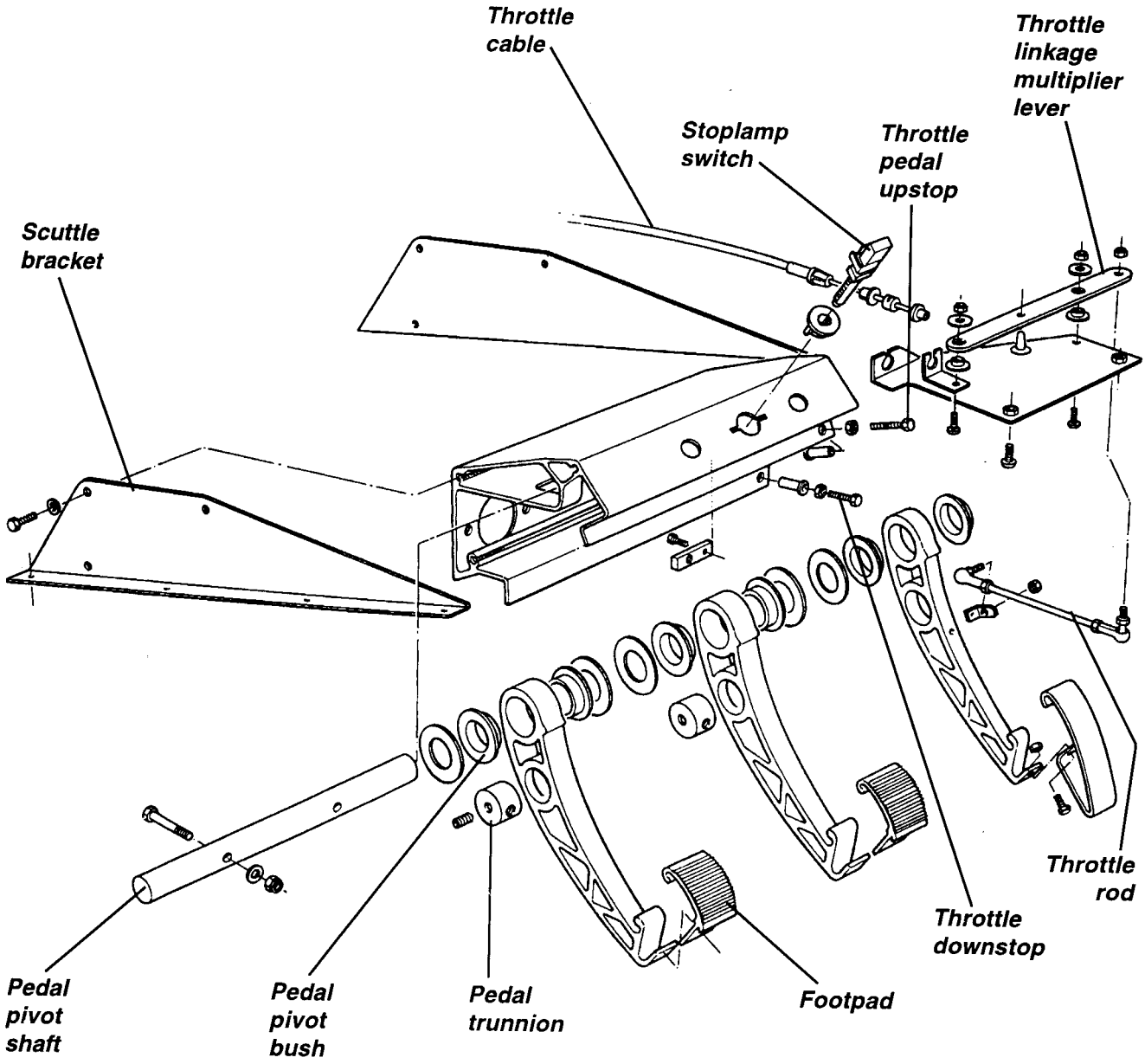

1160

The pedal box may be removed from the car complete with pedals, but to avoid hydraulic fluid loss and the necessity for subsequent bleeding, the brake and clutch master cylinders should be released from the pedal box before removal:

1. Release brake master cylinder from the pedal box (see sub-section JH.7) and ease the cylinder clear of the pedal box to disengage the pushrod, without straining the hydraulic pipes.

2. Release the clutch master cylinder from the pedal box: Remove the two Nyloc nuts and flat washers from inside the pedal box, and ease the cylinder clear of the pedal box to disengage the pushrod.

3. From within the footwell, release the ball jointed rod from the throttle pedal.

4. Twist and withdraw the brake light switch from the top rear of the pedal box.

5. Disconnect the ventilation air intake hose from the diverter flap housing on the scuttle, and release the screw securing the housing from within the intake aperture. Move the housing aside to allow the pedal box fixings to be withdrawn.

6. Remove the pinch bolts, and disconnect and remove the steering column intermediate shaft.

7. Remove the three M6 screws securing each end of the pedal box to the scuttle beam brackets, and withdraw the complete pedal box downwards into the footwell.

8. With the pedal box removed, the space bush and throttle pedal may be slid off the end of the pivot shaft. The shaft may be withdrawn after removal of its two retaining bolts, freeing the brake and clutch pedals and their thrust washers. Note that brake and clutch pedals are fitted with two 'top hat' section plastic pivot bushes, with a plastic thrust washer fitted each side of both pedals. The throttle pedal uses a single bush fitted from the inboard side, with a thrust washer on the inboard side and a pivot bush used as a spacer between the pedal and the scuttle bracket.

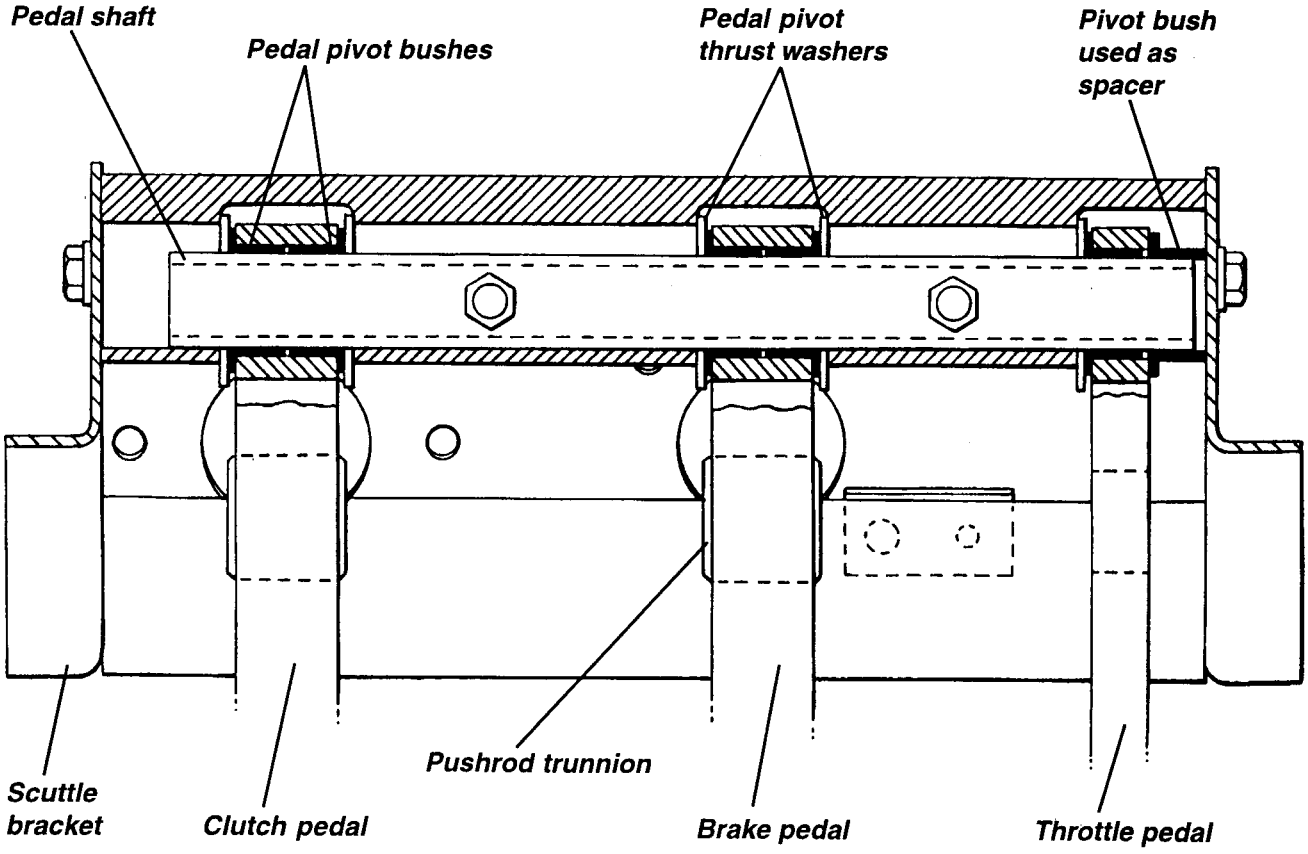

8. On re-assembly, note that no lubricants are used in conjunction with plastic bushes, but that a special Dow Corning DC33 Medium grease (A111F6016) is used on the brake and clutch pedal trunnions. Take care to correctly identify the brake and clutch pedals: The bore for the pushrod trunnion is offet on the brake pedal towards the pivot.

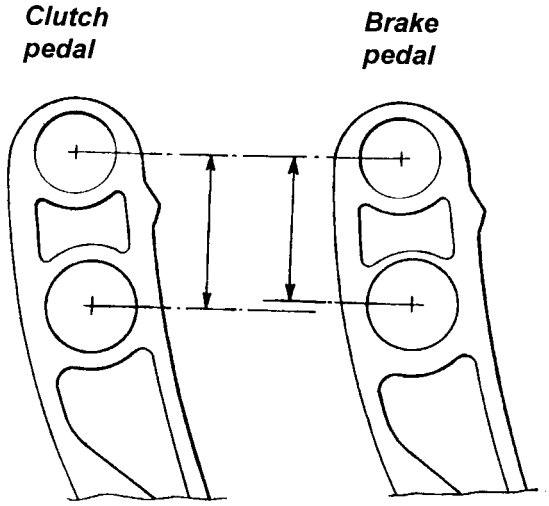

j166

7. Refit in reverse order to removal, adjusting the brake pedal pushrod as detailed in sub-section JH.7 and the clutch pedal in a similar manner. The throttle pedal upstop should be adjusted as follows:
- Adjust the pedal upstop for a throttle pedal height approximately 30mm lower than the clutch and brake pedals.
- Adjust the length of the ball jointed pull rod to achieve a gap of 20mm between the outer cable abutment and the inner cable pivotting link on the multiplier lever.
- Adjust the cable slack at the engine end abutment as detailed in section EMN (or 'Lotus Check' operating instructions).
- Adjust the pedal downstop so that full travel of the throttle butterfly can just be achieved without allowing the cable to be strained.

Viewed from above

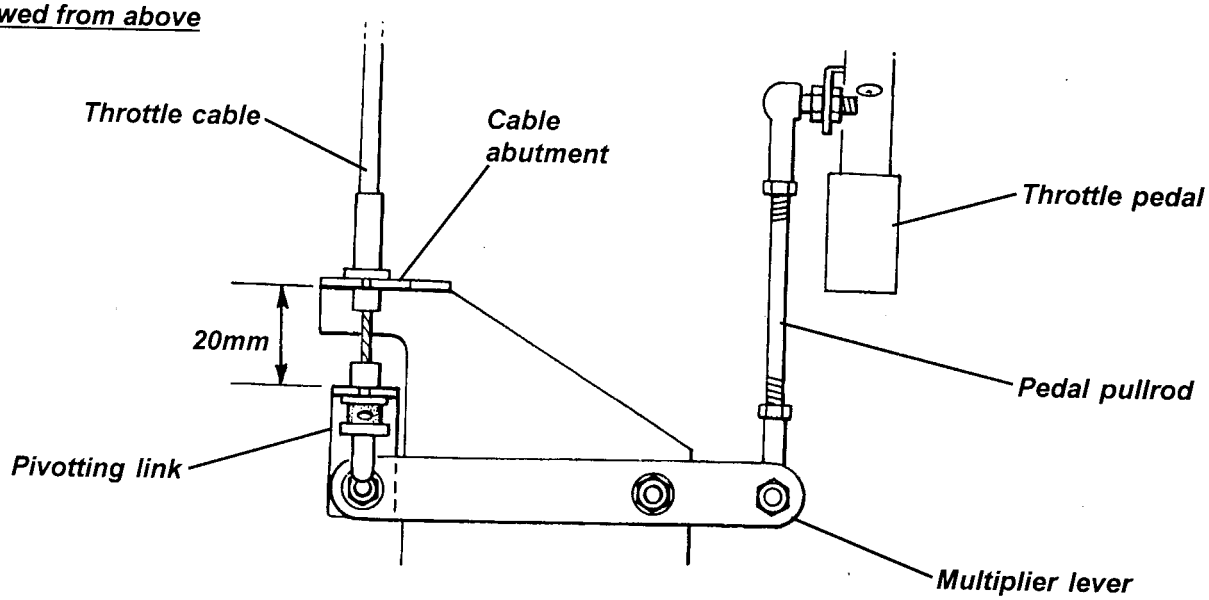

j171

Torque Settings	Nm
Pedal box to chassis	9
Brake master cylinder to pedal box	28
Clutch master cylinder to pedal box	28
Brake pipes to master cylinder	15

JH.9 - CALIPER OVERHAUL

The front brake calipers are manufactured by A.P. Racing, and are to be dismantled or overhauled only by their factory at Wheeler Road, Seven Stars Industrial Estate, Coventry, CV3 4LB.

The Brembo rear brake calipers may have the sliding pins overhauled as detailed below, but any signs of hydraulic leakage from the cylinder indicate that the unit should be replaced.

Rear Caliper Sliding Pins

The sliding bushes and sleeves of the Brembo rear calipers may be replaced without disturbing the hydraulic connection:

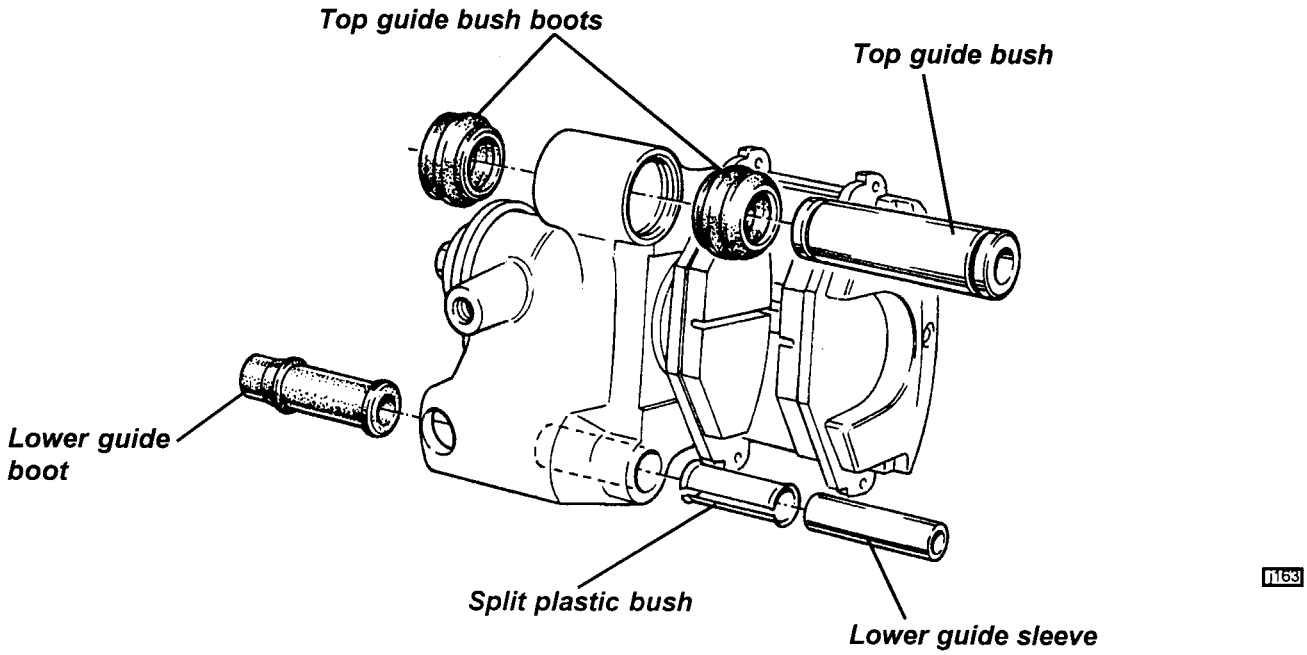

a) Disconnect the parking brake cable from the caliper.

b) Remove the cap head bolt securing the bottom guide bush to the caliper adaptor plate.

c) Remove the hex. head bolt securing the top guide bush to the caliper adaptor plate, and withdraw the caliper from the car with the brake hose still connected.

d) Slide out the lower steel guide sleeve and withdraw the bush/boot from the caliper. Pull the boots off the top steel guide bush and slide out the bush from the caliper.

e) Clean the guide bores in the caliper body with brake cleaner. Lubricate the new bushes and boots with silicone grease provided in the repair kit, and reassemble into the caliper in reverse order to disassembly.

f) Refit the caliper to the adaptor plate using Permabond A134 on the threads of both bolts, torque tightening the two fixings to:
Upper M10 bolt; 45 - 50 Nm (33 - 37 lbf.ft)
Lower M8 caphead; 26 - 30 Nm (19 - 22 lbf.ft)

g) Reconnect the parking brake cable and operate the footbrake to reposition the pads before driving the car.

ENGINE COOLING

SECTION KF - M111 ELISE

	Sub-Section	Page
General Description	KF.1	3
Maintenance	KF.2	3
Drain/Refill Procedure	KF.3	4
Radiator & Cooling Fan	KF.4	6
Radiator Fan Control	KF.5	8
Radiator Feed & Return Pipes	KF.6	8
Water Pump & Thermostat	See Section EE	

Thermostat Closed

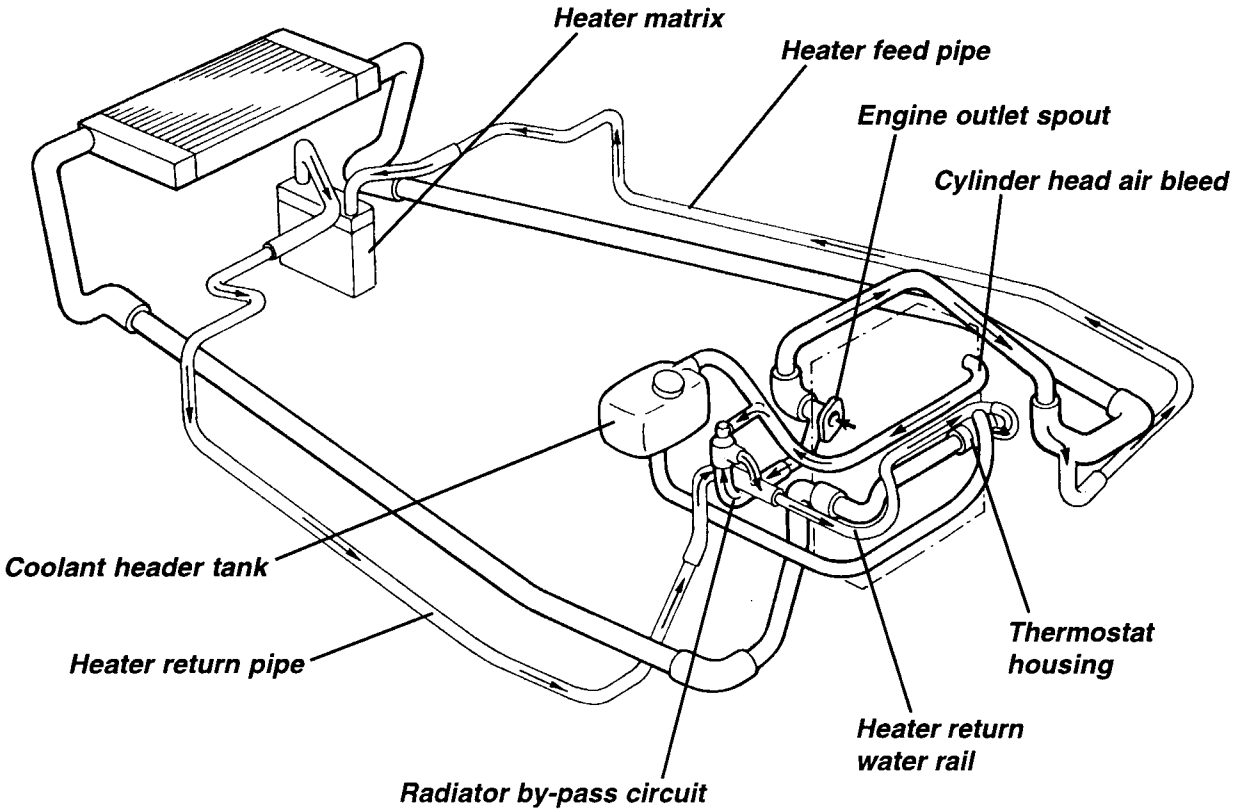

k59

Thermostat Open

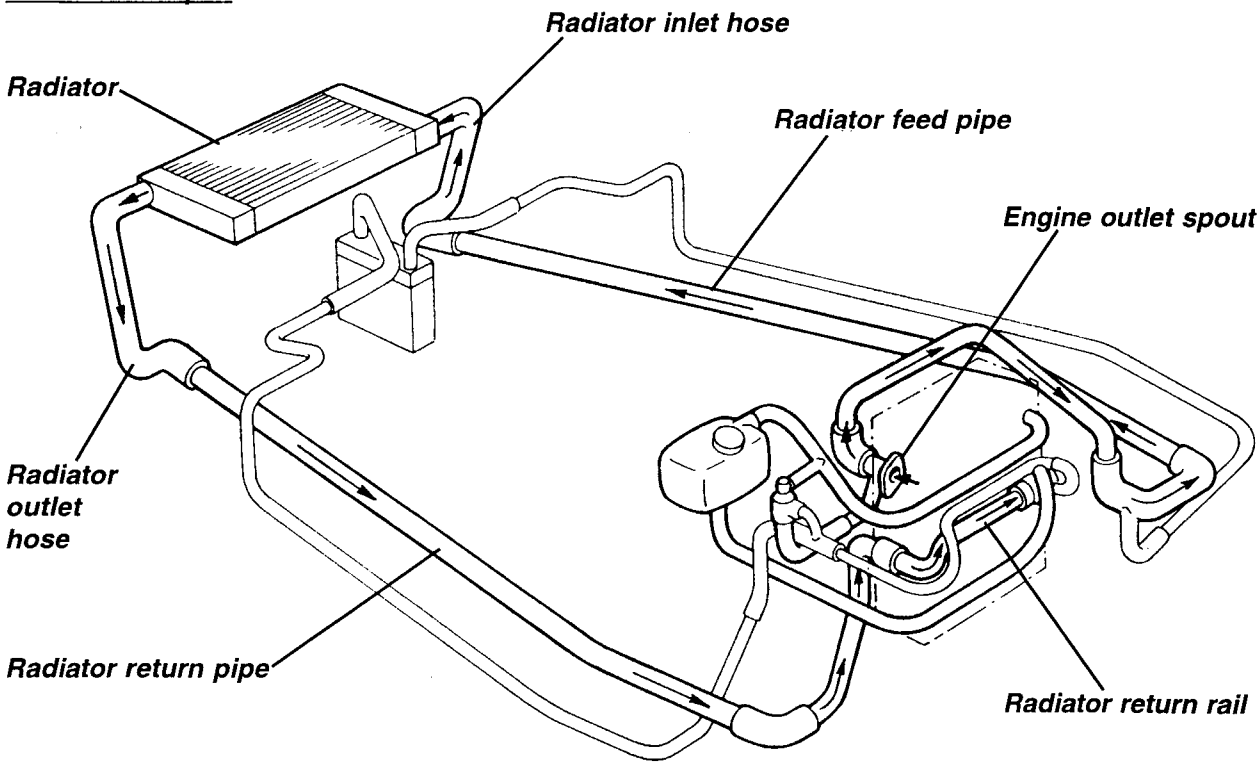

k58

KF.1 - GENERAL DESCRIPTION

The engine cooling system comprises an engine driven water pump, a front mounted radiator with electric cooling fan, and associated pipework and controls.

The centrifugal water pump is mounted on the front face of the cylinder block, and is driven by the camshaft toothed belt. Water is discharged from the pump into the front of the cylinder block, around the cylinder liners and up into the cylinder head, before exiting the engine via an outlet elbow at the left hand rear of the head. From the outlet elbow, there are three routes through which water may flow:

- Radiator circuit; The larger of the two spouts on the outlet elbow is connected via an alloy pipe running through the chassis right hand side rail, to the front mounted radiator. Water returns from the radiator via a pipe in the chassis left hand side rail to the engine bay. One of a pair of steel tube water rails then directs this water around the back and the right hand side of the engine to a plastic bodied thermostat housing fixed to the back of the water pump.

- Heater circuit; A take-off for the heater is provided in the radiator feed circuit at the right hand front of the engine bay, from where it is routed through an alloy pipe fixed to the outside face of the RH chassis side rail, to the heater matrix mounted between the front chassis rails. Water returns from the heater via a pipe routed outside the LH chassis side rail, and a second steel tube engine bay water rail, to the water pump side of the thermostat housing.

- Radiator by-pass circuit; The smaller of the two spouts on the cylinder head outlet elbow connects directly with the heater return pipework. When the thermostat is closed, the radiator return circuit is shut off, so that water is forced to flow through the heater and by-pass circuits, thus ensuring optimum heater performance.

The header tank is mounted at the left hand front of the engine bay, with a hose from its underside connecting with the heater return rail near the thermostat housing. An air bleed hose connects the header tank air space with the radiator by-pass circuit and a cylinder head spigot at the front end of the inlet manifold. The tank is fitted with a 110 kPa (15 lb/in^2) pressure cap to raise the boiling point of the coolant to over 120°C.

The engine cooling radiator is of aluminium construction with plastic end tanks and is horizontally mounted at the front of the vehicle, on top of the glass fibre composite 'crash structure' which also serves as a duct to direct airflow from the body nose air intake, to the underside of the radiator. A single ?? mm diameter electric cooling fan is fitted to the underside of the radiator to supplement, when required, the ram air flow, and a composite duct directs air exhausting from the top of the radiator through outlets incorporated into the front bonnet. Separate coolant temperature sensors for the engine management system (which also controls the radiator fan), and the temperature gauge are fitted in the cylinder head outlet elbow.

KF.2 - MAINTENANCE

Under normal operating conditions, the engine cooling system, being a closed circuit, should not require any topping up between services. As a precaution however, every week, the level of coolant in the engine cooling header tank should be checked. The transluscent header tank is marked with both cold and hot level indicators. The level of coolant will rise as the engine warms up and the coolant expands, and will fall again as it cools down.

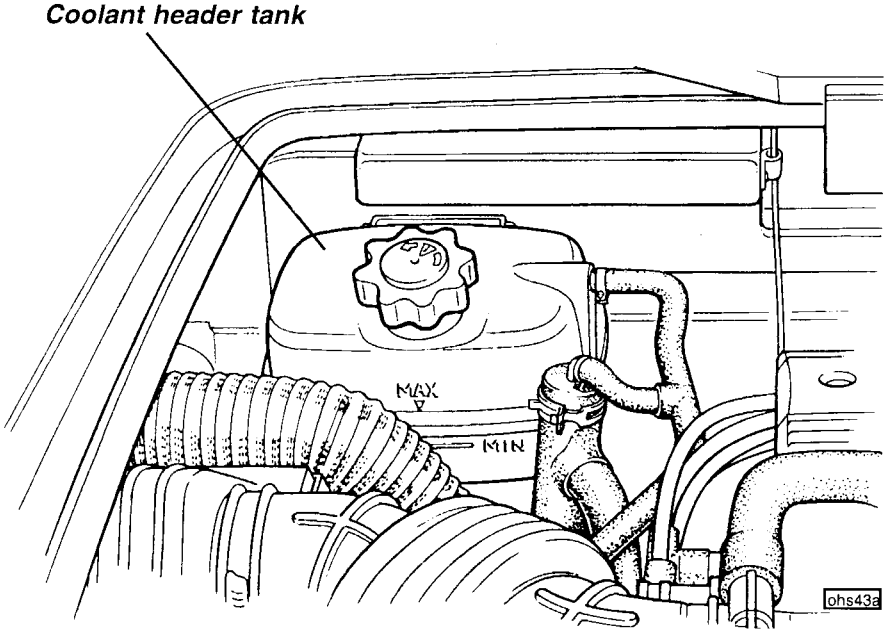

WARNING: Do NOT remove the cap from the engine cooling header tank when the engine is warm, as serious scalding could result from boiling water and/or steam.

When fully cold, the level of coolant should be up to the 'cold' mark moulded on the header tank. If overfilled, the excess coolant will be ejected when the engine is warm, and if the level is allowed to fall too low, overheating may result. If necessary, top up the system using an approved coolant mixture (see below) to maintain full protection from freezing damage and corrosion.

Anti-Freeze/Corrosion Inhibitor

It is necessary that the coolant contains an anti-freeze with corrosion inhibitor to protect the engine and heat exchangers from both frost damage, and corrosion of the metallic elements. A good quality mono-ethylene glycol anti-freeze, provides protection against these dangers as well as raising the boiling point of the coolant. The car is factory filled, for all markets, with a 50% concentration of anti-freeze which provides freezing protection down to approximately - 35°C. In warm climates it is recommended that the concentration is not allowed to fall below 25%, in order to maintain full corrosion protection.

The simplest means of checking the antifreeze concentration is to measure the specific gravity (density) of the coolant at a known temperature, using a hydrometer. The following table provides a general guide:

	Density @	
Concentration	***20°C***	***60°C***
25%	1.039	1.020
33%	1.057	1.034
50%	1.080	1.057

The coolant density reflects the effective level of mono-ethylene glycol, and not the level of corrosion inhibitors present, whose effectiveness diminishes over a period of time. The coolant should therefore be renewed every 24 months to ensure optimum corrosion protection.

In areas where the tap water is extremely hard (exceeding 250 parts per million), use of this water will lead to 'furring up' of the system over a period of time. In such areas, distilled, de-ionised or filtered rain water should be used.

Radiator Fin Cleaning

At service intervals, the matrix of the engine cooling radiator should be checked for clogging by insects, leaves and other debris. If necessary, use a water jet from both above and below to clean the fins, taking care not to damage the fragile tubes or distort the finning. At the same time, check the integrity of all cooling system joints, and the condition of all flexible hoses.

KF.3 - DRAIN/REFILL PROCEDURE

To drain the engine cooling system, remove the header tank cap, and disconnect the radiator feed and return hoses from the rear ends of the water rails running down each sill. If necessary, raise the front of the car to aid draining. Note that draining of the heater matrix is not easily possible with the unit 'in situ', and that if draining for the purpose of coolant change, this volume should be disregarded.

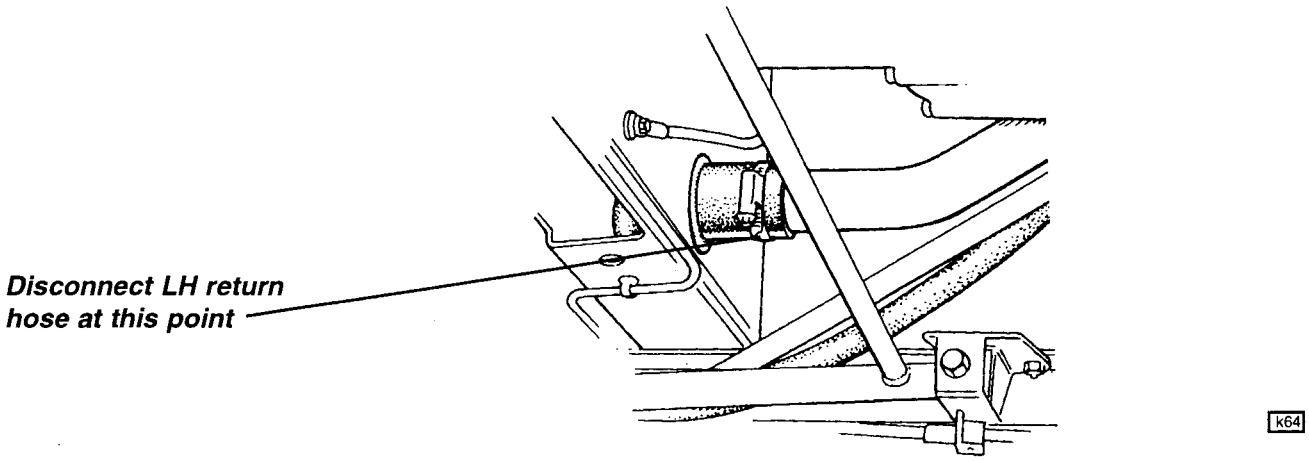

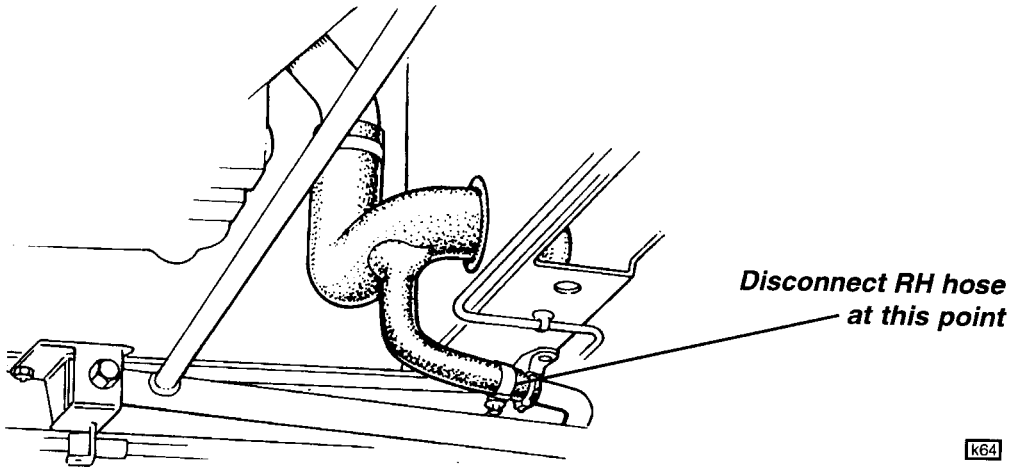

To refill the system:

1 Refit the hoses, and fill with the recommended coolant mix via the header tank.

2. Remove the bleed screw in the return water rail at the left hand side of the engine, taking care not to misplace the sealing washer.

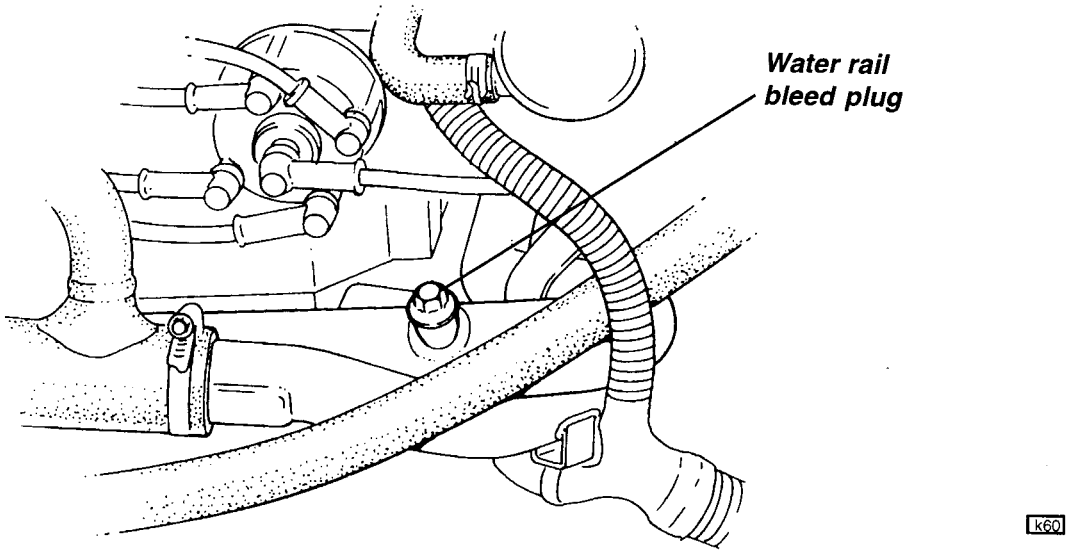

3. Using radiator pressure test equipment, pressurise the header tank to circulate the coolant. When necessary, refill the header tank and repeat. When a steady stream of coolant flows from the bleed port, replace the screw and washer and tighten.

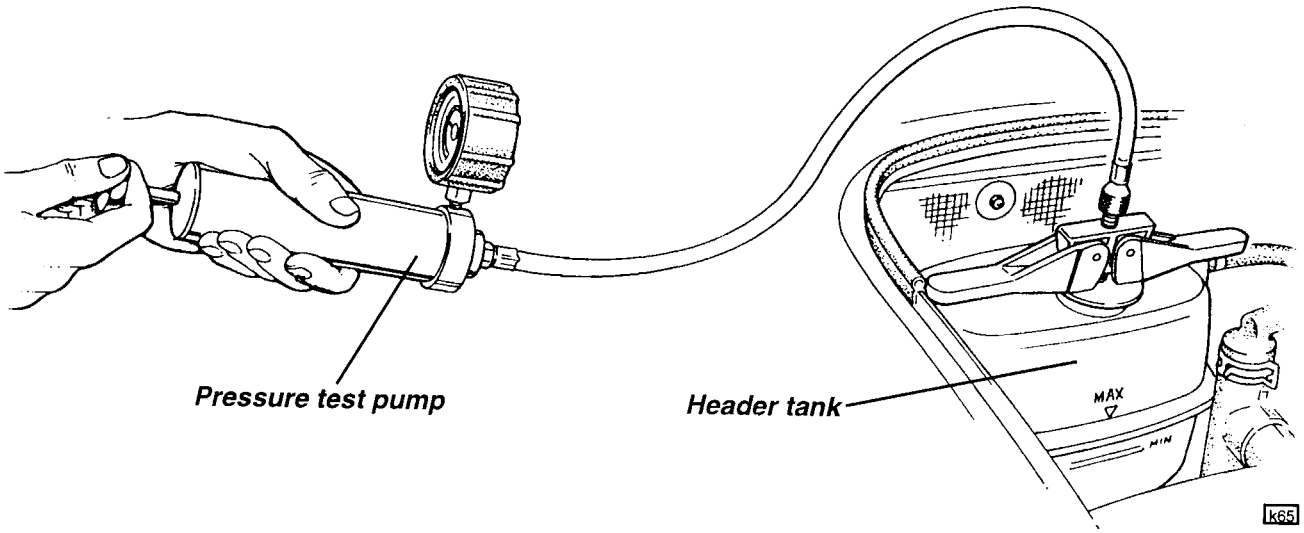

4. Release the front end of the LH front wheelarch liner, to provide access to the radiator outlet hose bleed screw. Pressurise the system to 35 kPa (5 lbf/in²) and open the radiator hose bleed screw until a steady stream of coolant flows. Tighten the bleed screw.

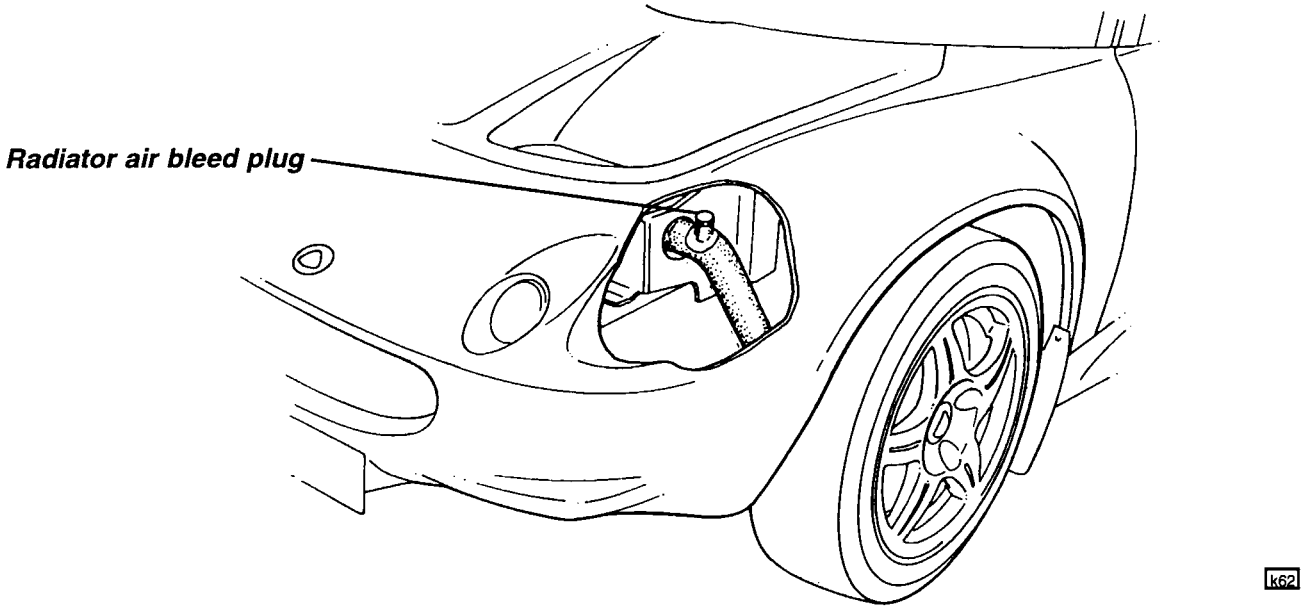

5. Remove the pressure test equipment and top up the header tank to the cold level. With the header tank cap removed, start and run the engine at idle until the water temperature gauge reads 60 - 65°C. Increase engine speed to 2000 rpm and observe the temperature gauge which should indicate 93 - 98°C before dropping to 90°C due to the action of the thermostat and the circulation of air pockets. After a further rise and fall of indicated temperature, re-bleed at the radiator hose with the engine running.

6. Continue to run the engine at 2000 rpm until the radiator return pipe at the engine feels hot, at which time the header tank cap should be replaced. Check that the radiator fan cuts in at 103 - 105°C and brings down the temperature to 90 - 95°C, before the cycle repeats.

7. Stop the engine and allow to cool fully before topping up the header tank to the 'low' mark.

KF.4 - RADIATOR & COOLING FAN

The aluminium cored radiator is mounted horizontally via four screws to a composite moulding which is itself secured to the top of the 'crash structure', and also provides mounting points for the front clamshell. A single electric cooling fan is secured directly to the underside of the radiator, and is accessible only after removal of the radiator.

To Remove Radiator

1. Remove the front clamshell (see sub-section BN.4).

2. Drain the coolant and disconnect the feed and return hoses from the radiator.

3. Release the five fixings securing the water shield to the top rear edge of the radiator mounting panel, and withdraw the shield.

4. Release the tie wraps, and unplug the rad. fan harness connector.

5. Release the eight fixings securing the radiator mounting panel to the crash structure; three along the front edge, three along the rear, and one smaller self tapping screw at the lower edge of each side lower edge. Lift away the panel complete with the radiator and fan.

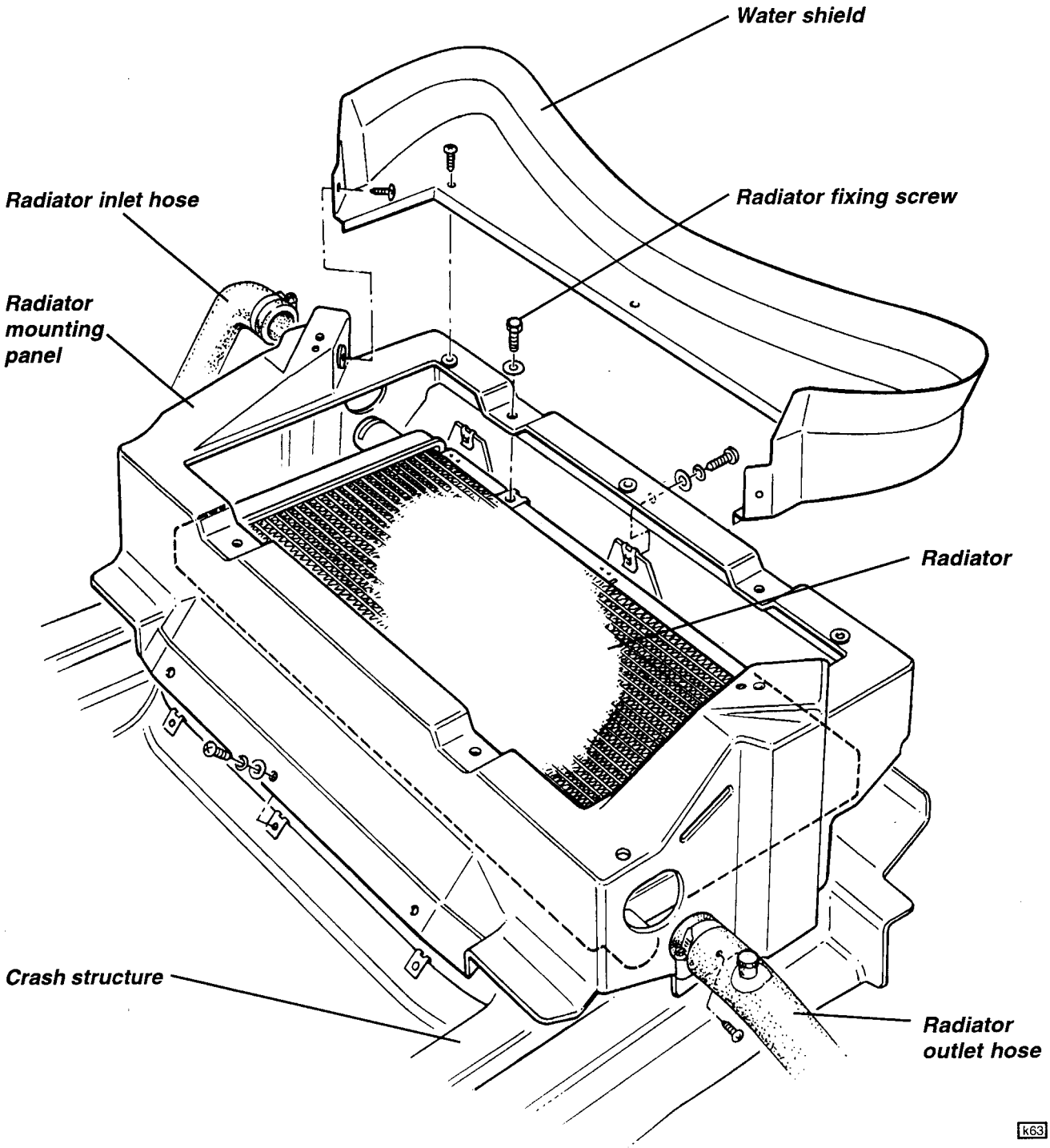

6. Release the fan motor from the radiator by removing the four nuts securing the fan shroud to the mounting brackets rivetted to the radiator frame. Withdraw the fan harness through the mounting panel grommet.

7. Remove the four screws securing the radiator to the mounting panel.

8. Refit the radiator in reverse order to removal and refill with coolant and bleed as detailed in sub-section KF.3.

KF.5 - RADIATOR FAN CONTROL

The engine management ECM requires a coolant temperature input signal in order to increase fuel delivery and maintain driveability during the cold running and warm-up phase. The Engine Coolant Temperature (ECT) sensor supplies this signal, which is also used by the ECM to control the radiator cooling fan. The fan is switched on at a rising coolant temperature of 102°C, and switched off on falling temperature at 96°C. Note that during a 15 minute period following ignition switch off, the cooling fan will operate if coolant temperature rises above 112°C, switching off again at 106°C. This feature helps prevent heat soak boiling.

The sensor is a thermistor (a resistor which changes value with temperature) mounted in the outlet junction pipe at the flywheel end front side of the engine. Note that the ECT sensor is mounted horizontally, and should not be confused with the water temperature gauge sender which is fitted in the same pipe, but vertically from below. Low coolant temperature produces a high resistance, whereas high temperature causes low resistance. At normal running temperature, the resistance will be approximately 300 - 400 ohms.

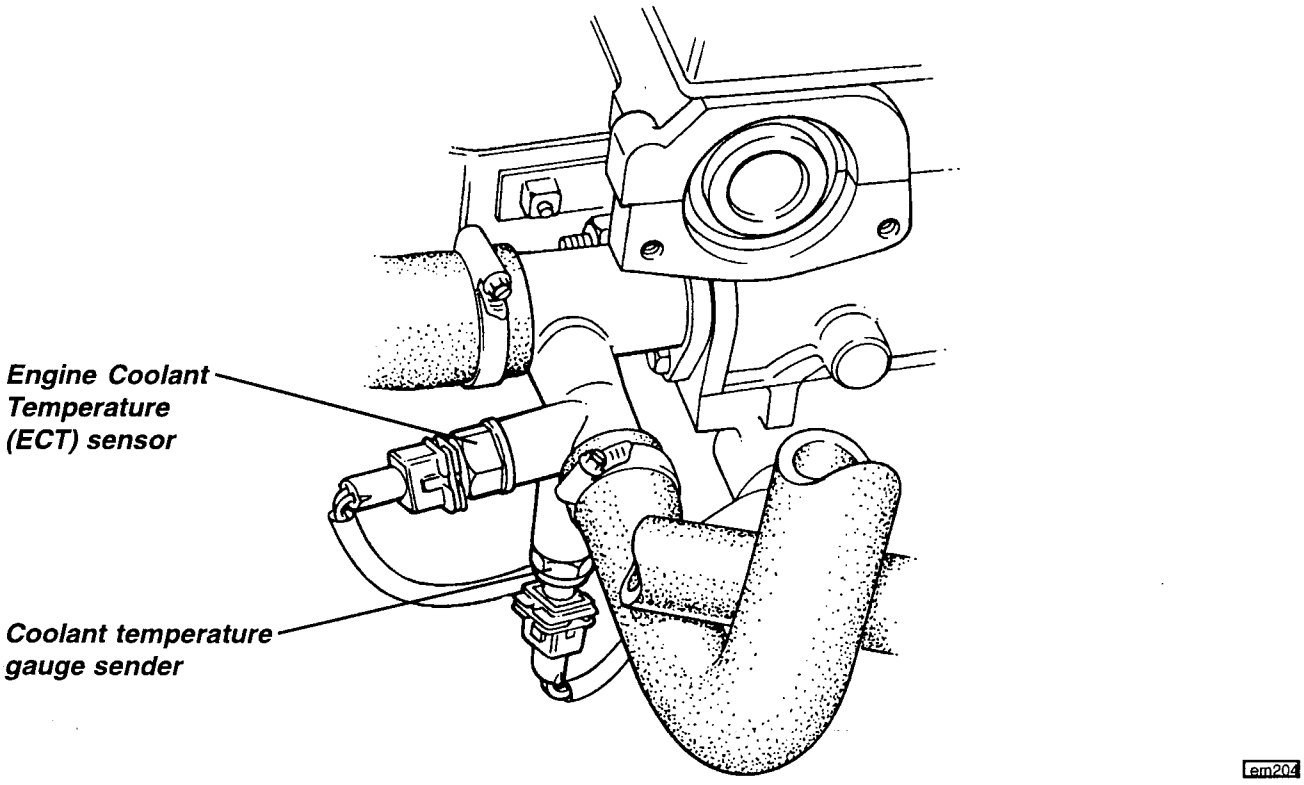

If the ECM receives a signal voltage outside of the acceptable range, a default setting equating to 60°C will be substituted, and the cooling fan energised.

To replace the sensor, disconnect the harness plug, and position a container to catch the escaping coolant when the sensor is removed. Unscrew the sensor from the junction pipe. Clean the threads of the pipe and sensor before applying Teflon tape to the sensor thread and screwing into the pipe. Tighten to 6 Nm. Refit the harness plug, and top up with coolant.

For further information on engine management, see Section EMN.

KF.6 - RADIATOR FEED & RETURN PIPES

The radiator feed and return pipes are routed through the chassis main side rails, feed on the right, and return on the left. Each pipe is located by a grommet in the chassis front closing panel, and by a pair of shaped foam blocks inserted into the rear end of each chassis rail.

On initial build, the water pipes are fitted before the crash structure is bonded to the front of the chassis. A new chassis assembly is supplied with both water pipes and the crash structure pre-fitted. If a pipe is to be replaced in service without the crash structure being removed:

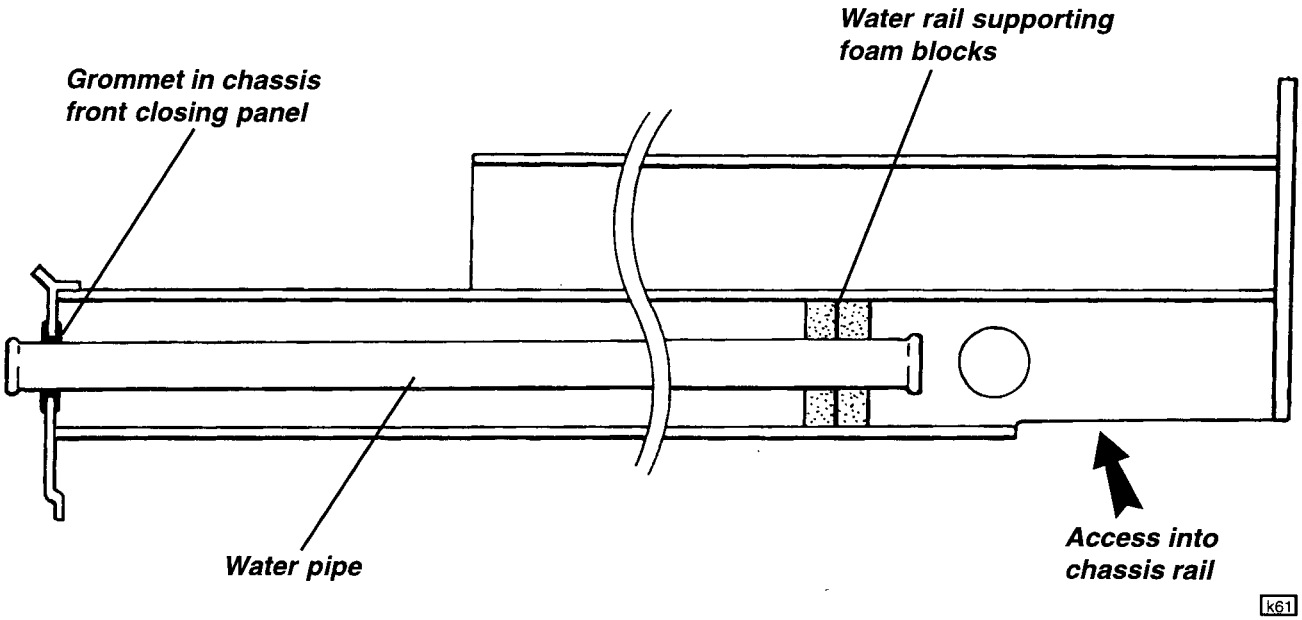

1. Drain the coolant and remove the front clamshell (see sub-section BN.4).

2. **WARNING: The machined edges of the chassis extrusions and the ends of the drive fasteners can present sharp edges and points representing a potentially serious hazard. It is strongly recommended that industrial gloves are worn, and other suitable precautions taken to provide protection from cuts and abrasions.**
   Release the hoses from the front and rear end of the water pipe.

3. Using the access provided from the open underside of the rear end of the chassis side rail, push the water pipe forwards until obstructed by the crash structure. It is recommended that a suitable hole be cut in the flat vertical face of the crash structure, adjacent to the fog lamp harness grommet, in order to allow the pipe to be withdrawn forwards.

4. Retrieve the two support foams from inside the chassis rail. Fit the grommet into the hole in the chassis front closing plate, and smear with rubber grease. Feed the pipe through the access hole and grommet, and position with 35 - 40 mm of pipe protruding.

5. At the rear end of the pipe, fit two foam support blocks onto the pipe, and push into the chassis rail to expose approximately 35 - 40 mm of pipe. After fitting the hoses, manipulate the pipe to check for absence of chassis contact 'knock'.

6. Blank off the access hole in the crash structure with a suitable grommet.

FUEL SYSTEM

SECTION LH - M111 ELISE

	Sub-Section	Page
General Description	LH.1	3
Fuel Filling	LH.2	3
Precautions	LH.3	4
Fuel Filter	LH.4	4
Fuel Tank	LH.5	5
Fuel Pump/Sender Assembly	LH.6	8
Charcoal Canister	LH.7	10

FUEL SYSTEM GENERAL LAYOUT

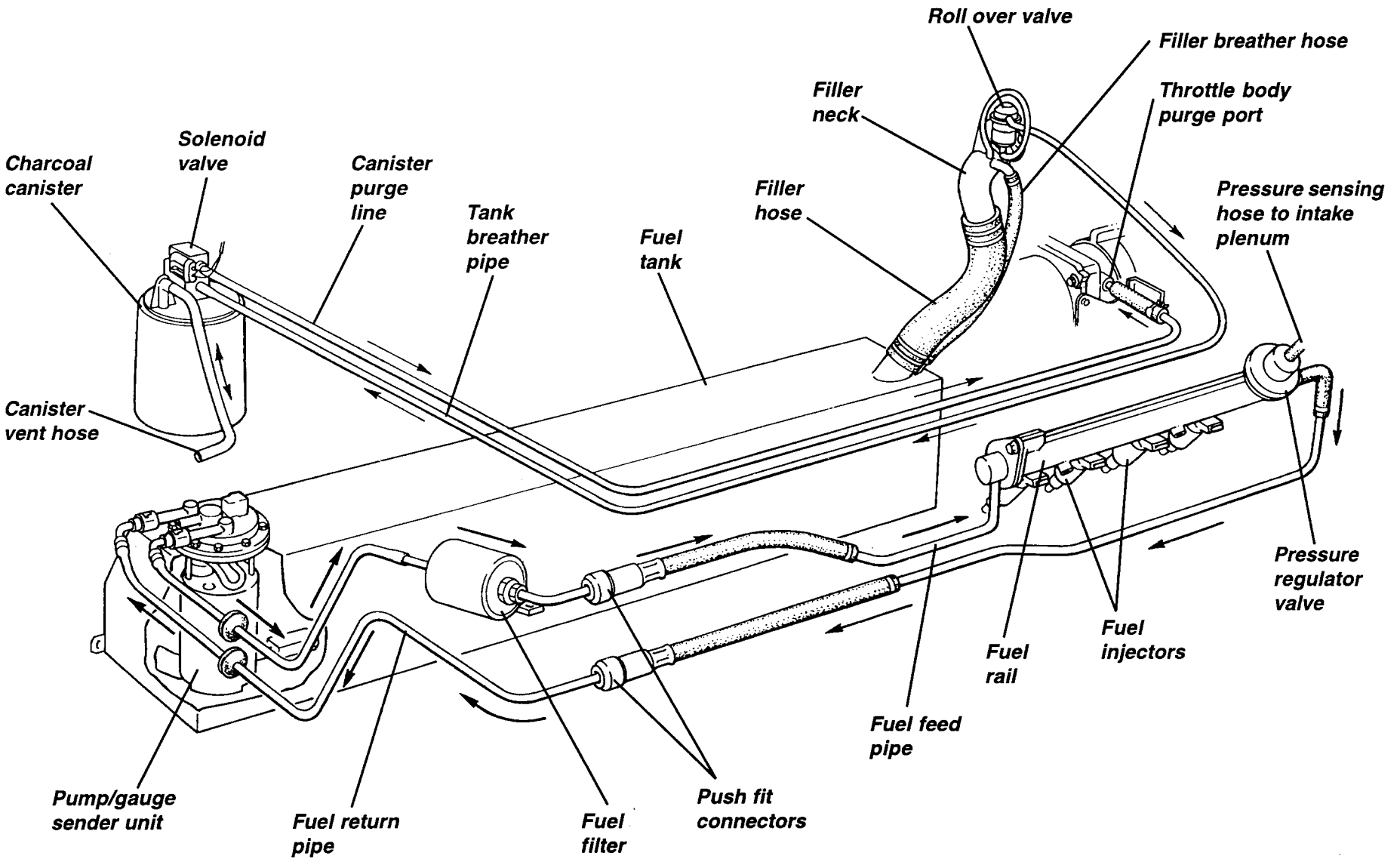

LH.1 - GENERAL DESCRIPTION

The 36.4 litre (8.0 imp.gall) fabricated steel fuel tank is mounted within the chassis crossmember between the passenger compartment and engine bay, with the fuel filler neck connecting to the right hand top of the tank, and the fuel pump/fuel gauge sender unit mounted into the left hand top surface. The modular fuel pump/sender assembly uses an electric motor to power a three stage impeller type pump system submerged within the tank, and incorporates a reservoir canister to avoid fuel starvation from surge effects caused by vehicle acceleration and cornering forces.

The supply pipe from the pump is routed via a replaceable fuel filter mounted at the left hand side of the engine bay, before connecting with the left hand end of the engine fuel rail. The fuel rail supplies all four injectors, and is fitted at the right hand end with a pressure regulating valve which maintains the pressure of fuel supplied to the injectors at 2.0 to 3.0 bar, dependent on engine load. Excess fuel is returned to the tank via a fuel return line. The constant circulation of fuel through the in-line fuel filter, fuel rail, pressure regulator valve and return line, helps avoid excessive fuel temperature with the consequent risk of vapour locks.

When the ignition is switched on, the engine management ECM energises the fuel pump which will continue to run for as long as the ECM receives ignition pulses from the ignition module (engine cranking or running). If no ignition pulses are received, the ECM switches off the pump either 2 seconds (approx) after the ignition was switched on, or about 10 seconds after a stall. A safety inertia switch is incorporated into the fuel pump electrical circuit, and operates in a severe impact (indicative of a vehicle collision) to switch off the fuel pump feed and minimise the fire risk. The switch is located to the rear of the air filter housing, and is reset once tripped, by pressing the rubber button on the top of the switch.

A roll over valve is mounted behind the fuel filler neck, and is connected between a breather spigot on the neck, and the charcoal canister. This valve allows venting of the tank under normal circumstances, but prevents fuel spilling from the vent pipe if the vehicle is inverted in an accident. The evaporative emissions control system (EECS) prevents untreated fuel vapour from the tank reaching the atmosphere, by routing the tank vent pipe from the roll over valve to a vapour storage charcoal canister mounted at the left hand side of the engine bay. When the engine is stopped, fuel vapour from the tank is absorbed by a bed of charcoal in the canister. When the engine is running, the engine management ECM opens a solenoid operated purge valve on the canister which allows a port on the throttle body downstream of the throttle valve to draw air through the canister, purging absorbed fuel from the charcoal, and consuming the resultant vapour in the normal combustion process. In this way, the charcoal bed is 'cleaned' ready to absorb more tank vapour.

Full details of fuel pump testing, fuel rail, pressure regulator and fuel injectors, are contained in engine management section EMN.

LH.2 - FUEL FILLING

Fuel Requirement

Only UNLEADED fuel with a minimum octane rating of 95 RON ('Premium' unleaded in U.K.) should be used. Unleaded fuel with an octane rating higher than 95 RON offers no additional benefit.

Note that the filler necks are restricted in size so that only the smaller diameter nozzle used on **unleaded** petrol pumps may be inserted. The use of as little as one tankful of leaded fuel would cause irreparable contamination of the precious metal catalysts and the exhaust gas sensor used by the computer controlled engine management system.

Fuel Filling

WARNING: Be aware of the danger of explosion when dealing with petrol and its attendant fumes. Before stopping at a filling station, ensure that all cigarettes are extinguished, and that no naked flames or other potential ignition sources are present. Switch off the engine before refuelling.

Filler Cap: The self locking filler cap is located in the right hand rear quarter panel:

- To unlock the cap, insert the key, turn ¼ clockwise, ¼ counterclockwise, and then, to avoid the possibility of paint damage, *withdraw the key.*
- Remove the cap by unscrewing counterclockwise.
- Refit the cap by screwing clockwise into the filler neck and tighten until the ratchet mechanism clicks at least three times. The cap is now automatically locked, and requires the use of the key to be removed.

Filling Procedure: Insert the pump nozzle fully into the neck, and fill until the first time the auto-shut off mechanism is triggered. Do not attempt to 'brim' the tank to the top of the filler neck, as expansion of the fuel due to temperature change (especially in hot weather - the temperature in underground storage tanks is significantly colder) may cause flooding of the charcoal canister, or spillage of fuel.

The total fuel tank capacity is 36 litres (8.0 imp.gal).

LH.3 - PRECAUTIONS

The fuel line between pump and injector rail, and the injector rail itself, contain pressurised fuel both when the engine is running, and after switching off. This feature aids engine starting by reducing the time needed to build up operating fuel pressure, and inhibiting the formation of vapour pockets in the supply line of a stopped hot engine.

i) To minimise the risk of fire and personal injury, relieve the fuel system pressure before servicing the fuel rail or any related component. See 'Fuel Pressure Relief Procedure' below.
ii) To reduce the possibility of sparks occurring when a fuel line is disconnected, or when fuel vapour is present, the negative battery cable should be disconnected before work is commenced.
iii) When fuel lines are disconnected, absorb any escaping fuel in an absorbent cloth and dispose of safely.

Fuel Pressure Relief Procedure

This procedure should be used prior to disconnecting any part of the fuel line except the unpressurised return line.

- Pull out the fuel pump fuse (to rear of engine management ECM at LH side of rear luggage compartment), start the engine, and run until it stops from starvation. Crank the engine for a further 10 seconds.
- If the engine is a non-runner, pull out the fuel pump fuse, and crank the engine for a total time of 60 seconds to minimise residual fuel pressure.
- Disconnect the battery.
- Use a shop towel to absorb the small amount of pressurised fuel remaining as a fuel feed pipe connection is released, and dispose of safely

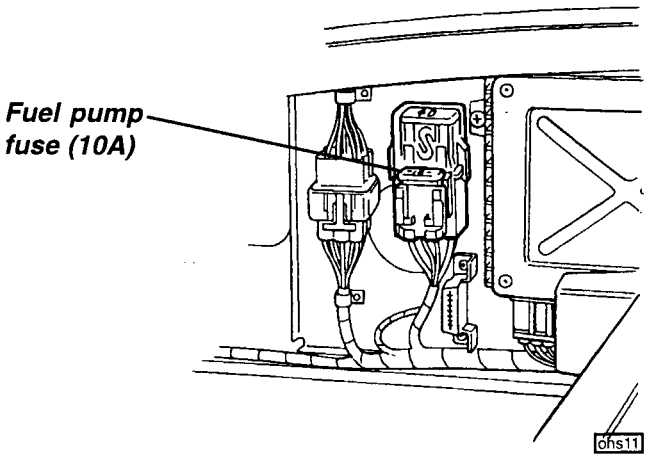

LH.4 - FUEL FILTER

The fuel filter is fitted in the feed line between pump and injector rail, and protects the delicate injectors from dirt particles and debris not screened out by the pump inlet strainers. The paper element fuel filter is contained within a steel canister fitted with compression joints, and is mounted in a holder on the air cleaner bracket at the left hand side of the engine bay. At intervals specified in the maintenance schedule, the filter unit should be renewed.

1. **WARNING: The fuel in the filter and connecting pipework remains pressurised after switching off the ignition. Before disconnecting the fuel line, carry out the fuel pressure relief procedure detailed in sub-section LH.3.**

2. Remove the air cleaner cover for access, and use two spanners to release the inlet connection from the front end of the filter. Use an absorbent cloth to collect any draining fuel. Release the push fit connector

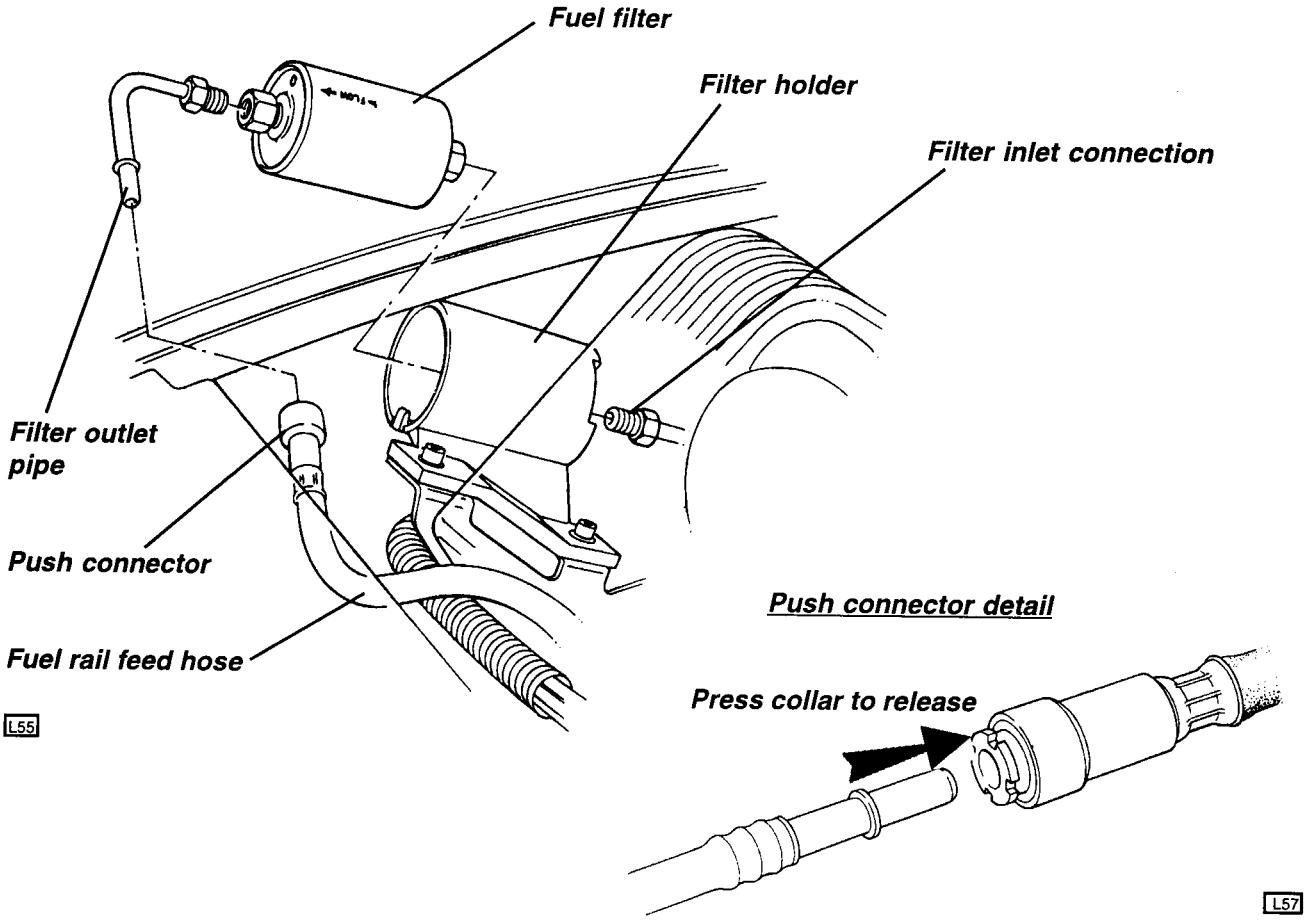

between the filter outlet pipe and the engine feed hose by pressing the release collar towards the connector, and sliding off the pipe end.

3. Press back the retaining clip, and withdraw the filter from its carrier. If necessary, remove the outlet pipe from the filter.

4. Fit the new filter into the carrier, ensuring that the retaining clip is properly engaged, and connect the two fuel hoses. Note the direction of flow arrow on the filter body, which must point towards the engine.

5. Start the engine, and check for fuel leaks.

LH.5 - FUEL TANK

The fabricated steel fuel tank is mounted within the chassis crossmember between the engine bay and passenger compartment. The tank must be removed from the chassis to allow replacement of the fuel pump/gauge sender unit assembly.

To Remove Fuel Tank

1. Remove the left hand seat, and from the left hand rear corner of the cabin, remove the access panel on the top of the chassis rear crossmember for access to the fuel pump connections.

   WARNING: The fuel line between pump and engine remains pressurised after switching off the ignition. Before disconnecting the fuel line, carry out the fuel pressure relief procedure detailed in sub-section LH.3.

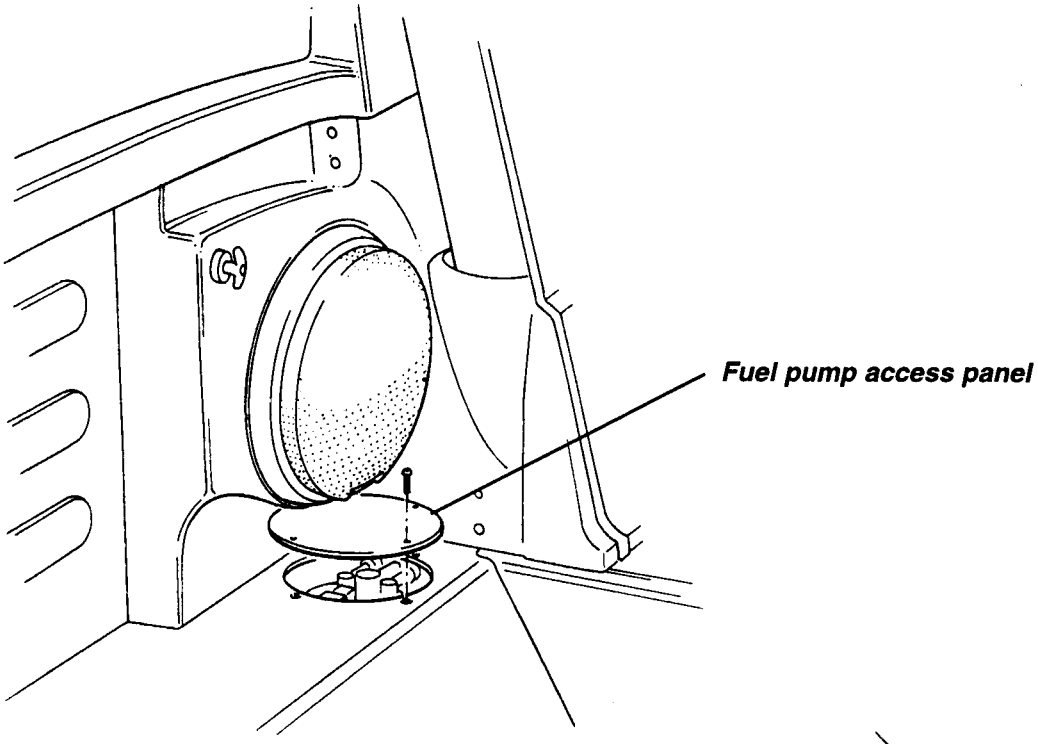

Release the feed and return pipes from the fuel pump by squeezing together the release tabs on the push fit connectors, and withdrawing from the spigots. Unplug the electrical connector from the pump assembly.

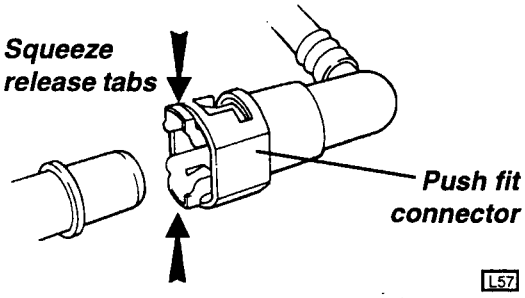

2. If necessary, syphon fuel from the tank to reduce the weight before removal.

3. Remove the RH rear wheel and wheelarch liner, and carefully peel back the cabin bulkhead sound barrier mat to provide access to the filler hose connections. Release the filler hose and filler breather hose from the tank spigots, and cap both orifices to prevent debris ingress and reduce the fire hazard.

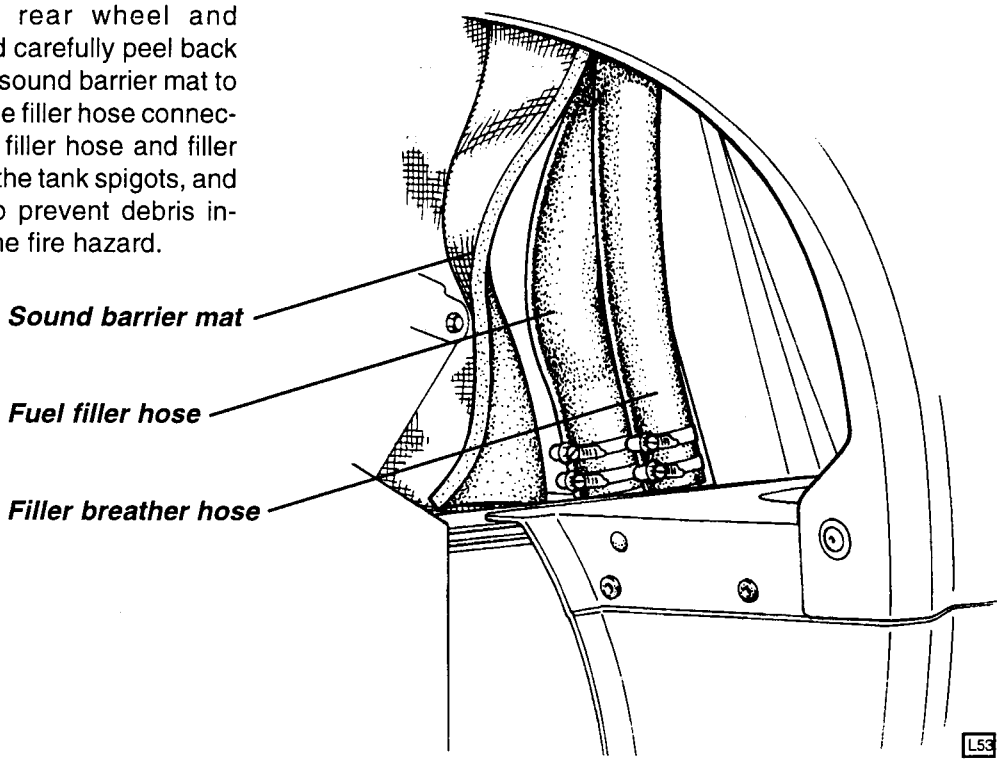

4. If fitted, remove the engine bay undertray/diffuser.

5. Disconnect control cables:
   - Release the two gearchange cables from the transmission levers and abutment bracket.
   - Release the parking brake cable from the horseshoe compensator and abutment brackets.
   - Release the throttle cable from the engine.
   - Release the gearchange cable and throttle cable 'P' clips from the perforated 'shear panel' below the fuel tank.

6. Release the fixings along the front and rear edge, and remove the 'shear panel' which closes the chassis box section housing the fuel tank. Note that this panel is a structural part of the chassis, and that the car should not be used without the panel fitted.

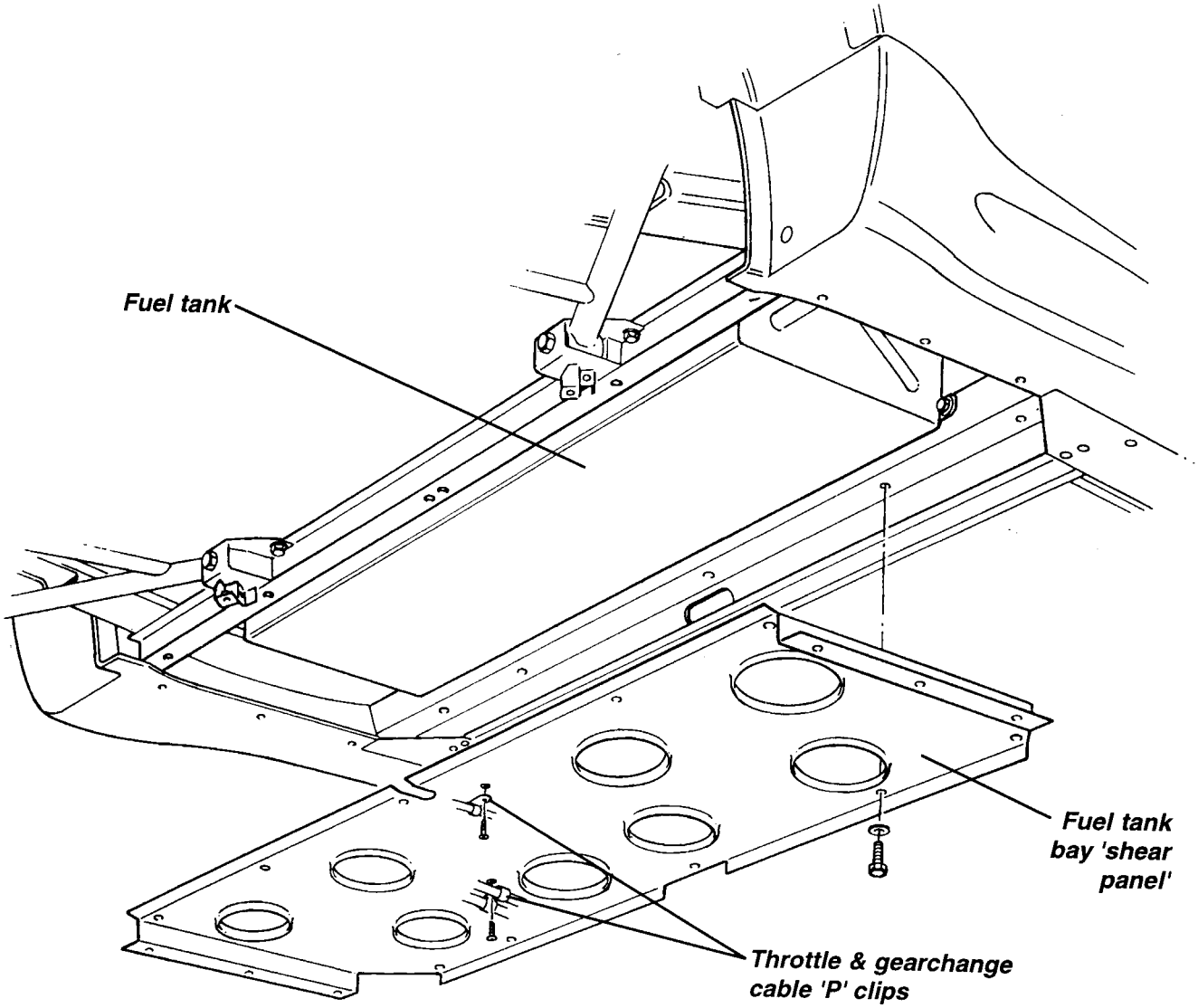

L58

7. Support the tank before removing the four bolts securing the fixing brackets at the base of the tank to the chassis, and carefully lower and remove the tank.

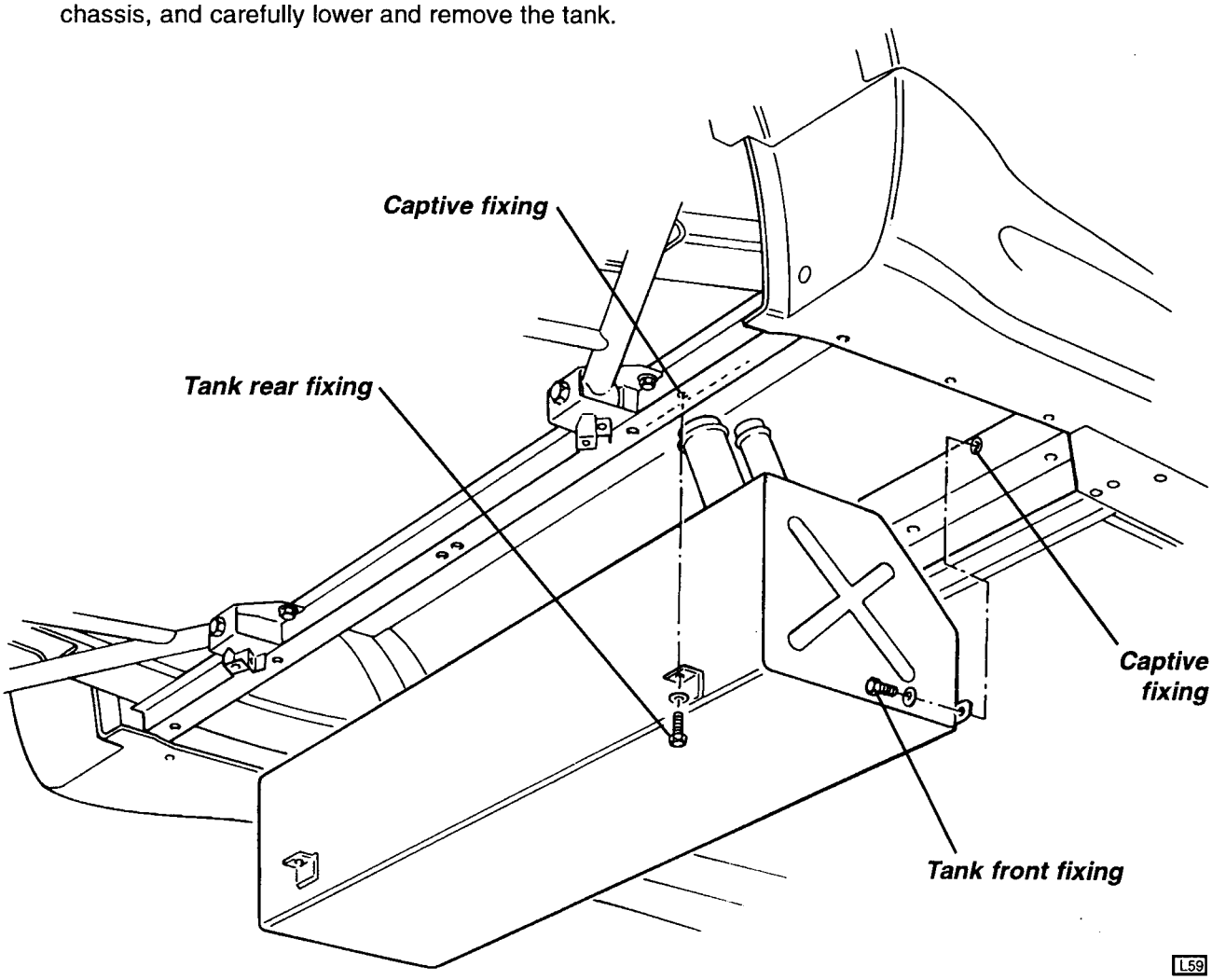

8. Refit the tank in reverse order to removal, taking care to connect the fuel pipes to the correct spigots on the fuel pump assembly;
   - Feed spigot marked 'F' (rearmost);
   - Return spigot marked 'R' (foremost).
   - Note that the centre (vent) connector is not used, and is blanked off internally.

   Ensure that the 'shear panel' is fitted beneath the fuel tank bay before driving the car.

LH.6 - FUEL PUMP/SENDER ASSEMBLY

The combined fuel pump/fuel gauge sender assembly is mounted submerged in the left hand side of the fuel tank, and utilises an electric motor to power a three stage impeller type pump, and a reservoir canister to avoid fuel starvation from surge effects caused by vehicle acceleration and cornering forces.

The complete unit is spring loaded against the bottom of the tank by three telescopic legs carried on the end plate, which is clamped by a mounting ring and 'O' ring, to an aperture in the top surface of the tank. The pump is housed within a reservoir canister kept filled with fuel even at very low tank levels. The pump connects with a port on the bottom of the canister fitted with a strainer sock in order to screen dirt particles from the fuel line and help separate any water content from the fuel. The first stage impeller pump draws fuel from the tank via this sock, and outputs it into the canister, which fills up to its overflow port in the top surface. The second stage impeller pump draws fuel from within the canister via another strainer sock, and supplies the high pressure third stage tubine pump which outputs fuel from the top end of the pump into the flexible pipe connected to the supply connection on the pump assembly top plate. From here, fuel is piped to the fuel rail on the

engine, from which it returns to the inlet connection on the top plate and spills into the canister to supplement the primary pump output and keep the canister fully filled. An umbrella valve in the bottom of the canister allows fuel to flow into the canister whenever the tank level is higher than the canister level. This feature also permits a continued fuel supply to the secondary pump stage in the event of a blocked primary stainer.

A removeable panel in the chassis behind the LH seat provides access to the fuel pipe connections, and harness connector, but if the fuel pump or gauge sender unit require attention, it is necessary to remove the fuel tank from the chassis.

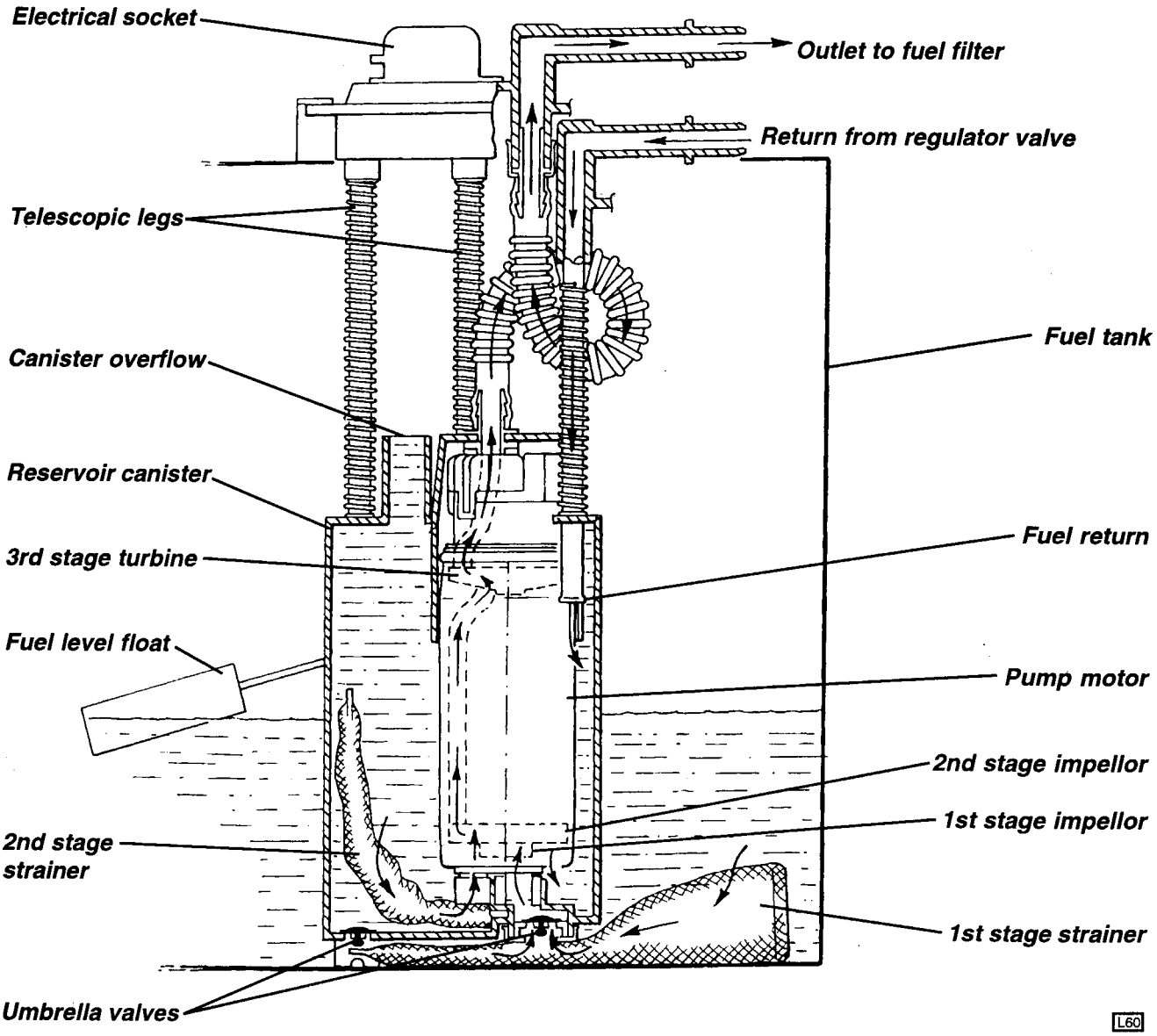

To Remove Pump/Sender Assembly

1. Remove the fuel tank (see sub-section LH.5).

2. Release the 8 x M5 fixing nuts, noting that the unit is lightly spring loaded, and remove the clamp ring retaining the pump assembly to the tank. Withdraw the pump/sender unit and sealing 'O' ring. Cap the tank aperture to prevent dirt ingress and to reduce the fume hazard.

3. To release the fuel gauge sender unit, unclip the black foot from the base of the canister, and disengage the sender mounting bracket from the canister. Disconnect the electrical cables from the unit and withdraw. Take care not to damage the float arm.

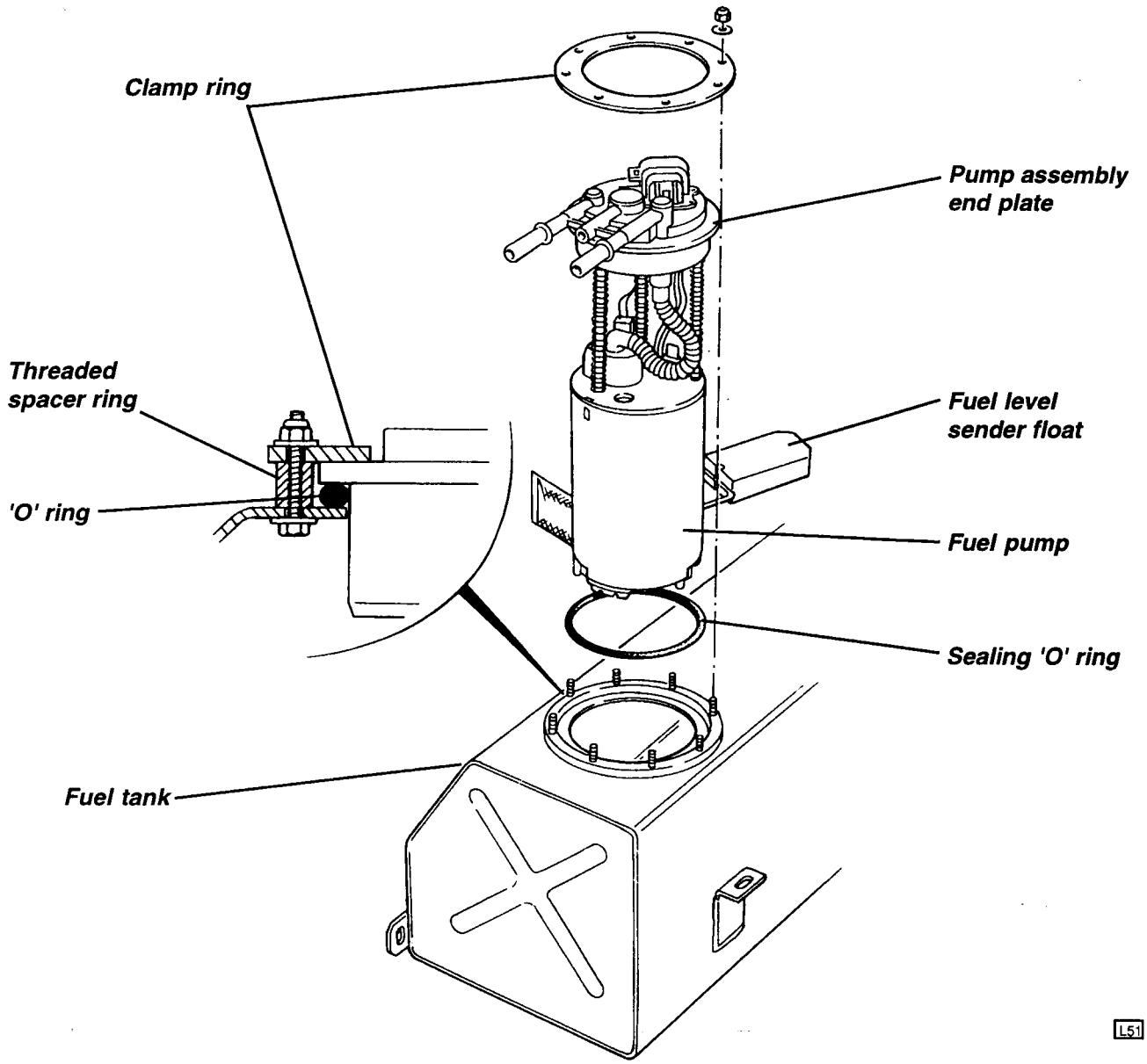

4. For access to the pump, depress the three retaining barbs, and withdraw the reservoir canister from the pump assembly. Unplug the pump electrical connector, and pull the pump from its outlet spigot.

5. Thoroughly clean the fuel inlet strainer socks on the pump and canister before refitting.

Re-fitting Pump/Sender Assembly

Before refitting the pump unit, check the type of fixing screws securing the threaded ring around the tank aperture. If hex. head screws are fitted (prior to Feb. '97), replace with 10.9 grade flanged button head M4x20 screws A111W7163F with annealed copper washers A111W4170F. Use Hylomar between the threaded ring and tank surface, and apply thread lock to the screws before fitting with their washers and tightening to 4.0 Nm. Fit the pump unit into the tank, ensuring that the 'O' ring is positioned correctly, and align the pipe spigots on the end plate with the tank main axis, pointing to the left. Tighten the clamp ring nuts to 2.6 Nm.

LH.7 - CHARCOAL CANISTER

In order to prevent fuel vapour venting from the fuel tank to atmosphere, the breather pipe from the tank is routed to a canister filled with activated-charcoal, which adsorbs and stores the fuel vapour when the engine is stopped. When the engine is running, the canister is connected to the depression in the intake plenum via

a port in the throttle body, such that fresh air is drawn through the canister to purge the charcoal of its adsorbed fuel, with the resultant gas then consumed by the engine in the normal combustion process.

Charcoal Canister

This is mounted at the left hand front corner of the engine bay via a tapered lug on the canister and corresponding bracket on the bulkhead.

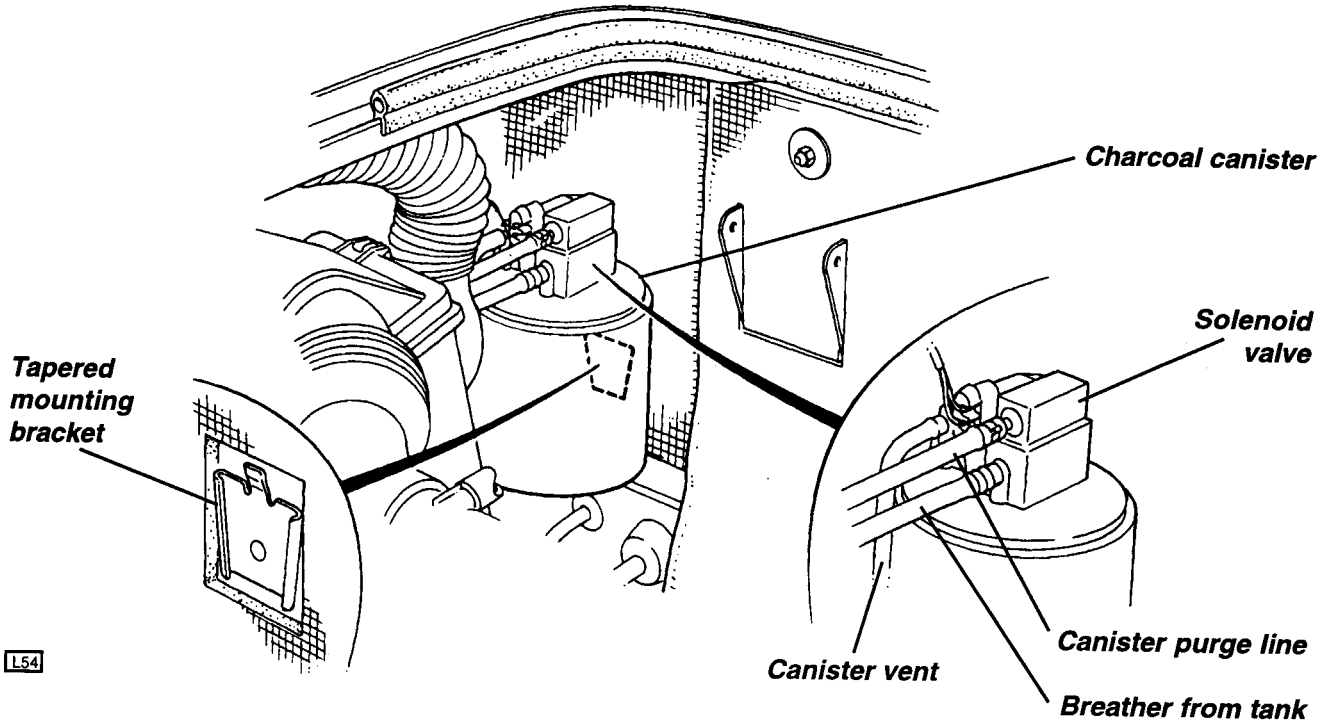

Fuel vapour from the top of the fuel tank filler neck is routed via a roll-over valve (to prevent fuel spillage if the car is inverted) mounted on a bracket integral with the filler neck, to the canister port labelled 'tank'. A central tube in the canister connects this port to the underside of the charcoal bed, below which is a reservoir to collect any liquid fuel.

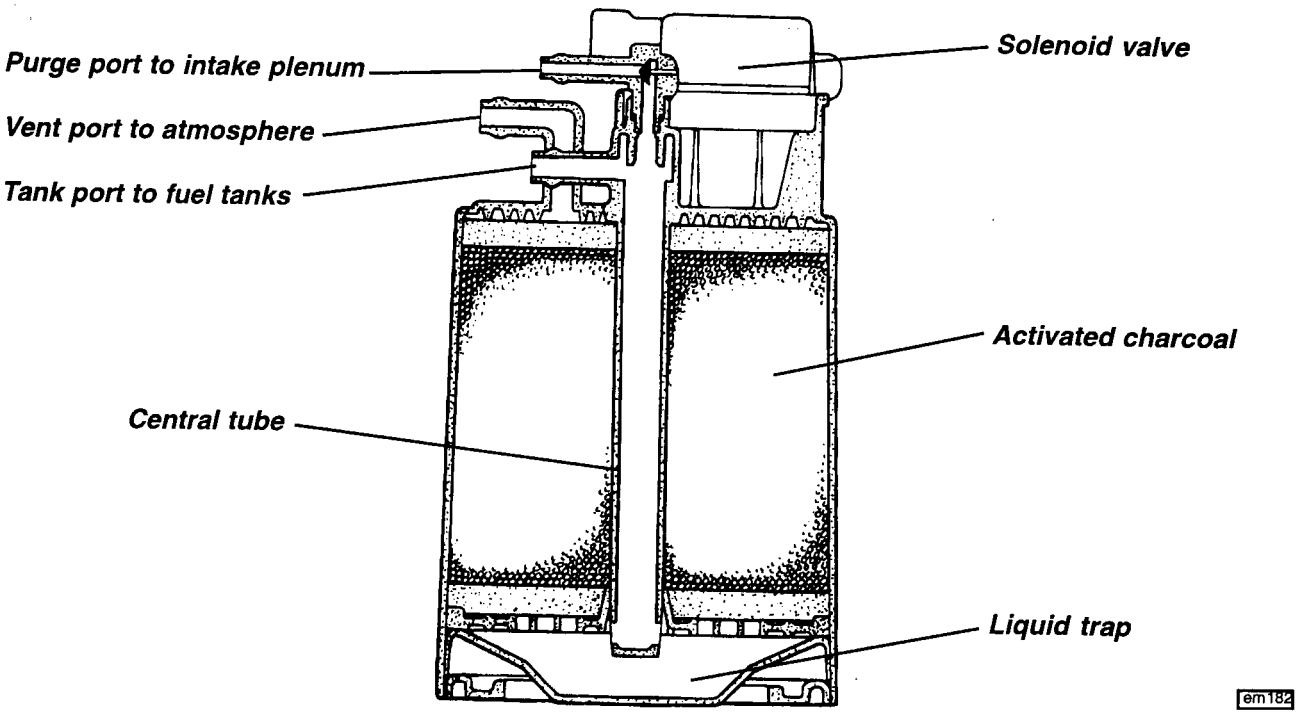

The top side of the charcoal bed is connected via a port in the top of the canister, to atmosphere. A purging port, controlled by a solenoid valve on the top of the canister, connects the tank vent and underside of the charcoal bed with a port on the throttle body such that when the valve is open, the depression in the engine intake draws air through the charcoal bed to purge the canister of vapour, and prepare the charcoal for further adsorption.

Control System

The canister purge valve is controlled by the engine management ECM, which keeps the valve closed (unenergised) when the engine is cold or idling in order to protect the catalyst and maintain idle quality. At coolant temperatures above 75°C and engine speeds above 1600 rpm, the ECM opens the valve and allows purging of the charcoal to take place, burning the resultant gas in the normal combustion process.

Roll Over Valve

The roll over valve is fitted on a bracket integral with the filler neck and is positioned above the neck within the 'flying butress' of the rear clamshell. The clamshell must be removed (Sub-section BN.5) for access to the valve.

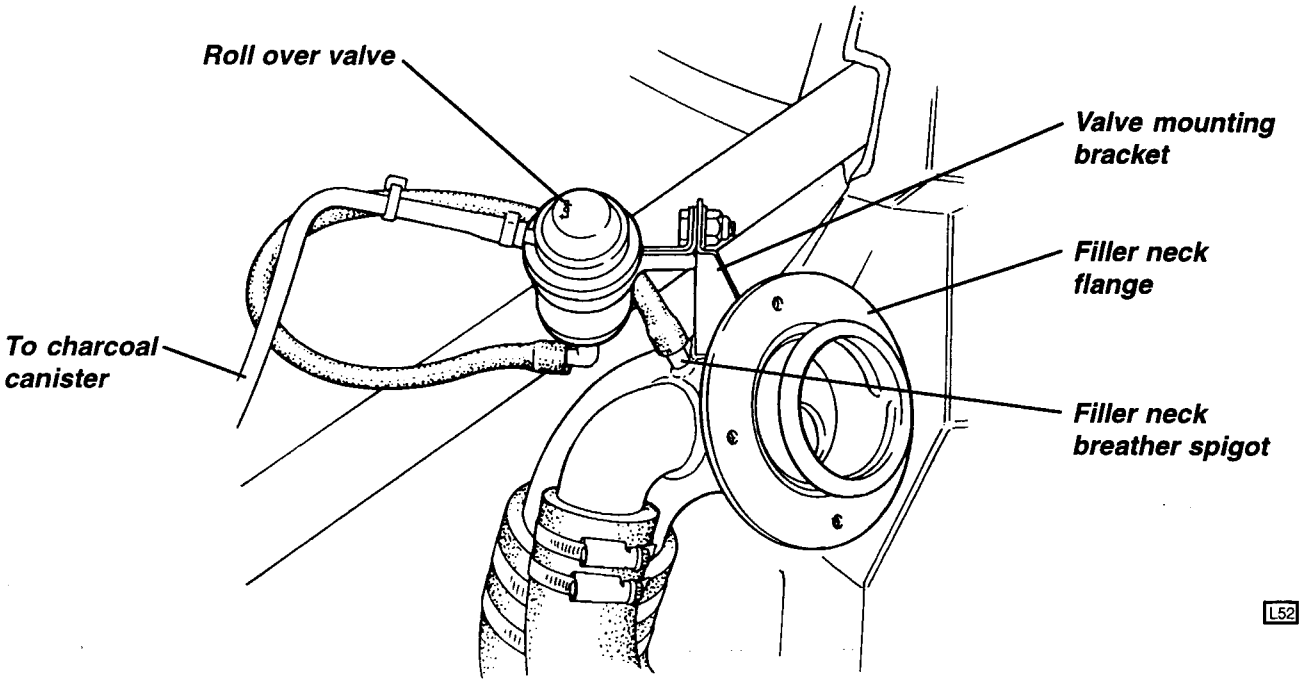

ELECTRICS

SECTION MN - M111 ELISE

	Sub-Section	Page
Vehicle Security Alarm (Standard Lucas & Cobra 6019HF option)	MN.1	2
'Lotus Check' Scanner Tool	MN.2	7
Switches & Instruments - Driver's Information	MN.3	9
Component Location & Fuse Ratings (prior Oct. '97)	MN.4	15
Audio Equipment	MN.5	17
Battery, Battery Cables & Earthing Points	MN.6	18
Wiper Mechanism	MN.7	21
Fitment of Driving Lamps	MN.8	22
Harness Routing	MN.9	23
Introduction of Uprated Starter Motor	MN.10	28
Circuit Diagrams (prior to Oct. '97 - white paper)	MN.11	29
Vehicle Security Alarm (Cobra 6422 option)	MN.12	31
Fuses & Relays (Oct. '97 onwards)	MN.13	36
Circuit Diagrams (Oct. '97 onwards - cream paper)	MN.14	37

MN.1 - VEHICLE SECURITY ALARM (Standard Lucas & Cobra 6019HF option)

Prior to October '97, Elise models may be equipped with one of two levels of alarm system. The base system uses a Lucas 5AS module which is electronically matched to the engine management ECM to provide a passive immobiliser function, and operates the vehicle horn if either door is opened, or the ignition circuit energised. Cars with this level of alarm may be identified by the 'Lucas' branded transmitter keys.

Standard alarm transmitter key

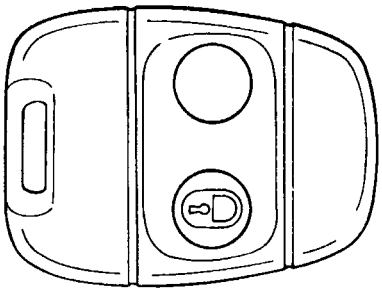

Upgraded alarm transmitter key

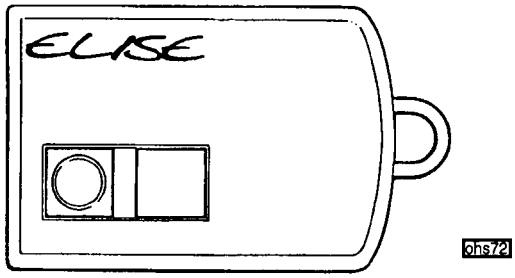

The optional factory alarm upgrade, uses a Cobra Goldline 6019HF system which incorporates passive immobilisation, selectable microwave intrusion sensing, door, bonnet and boot lid sensing, a self powered siren, and dynamic coding of the transmitter frequency. Cars with this level of alarm may be identified by the red and blue transmitter buttons, and the microwave unit mounted on the rear bulkhead between the seats.

Whichever system is fitted, one of the two battery powered electronic transmitter keys provided, should be kept safe for use in an emergency, and the batteries of both keys renewed at six monthly intervals to ensure continuity of operation.

Vehicle Security Alarm - Lucas 5AS Standard Fitment

When armed, the vehicle alarm system enhances theft protection of the car by pulse sounding the horn if either door is opened, or the ignition circuit is energised. Additional protection is provided by an 'immobilisation' feature which disables the engine cranking and ignition circuits when the alarm is armed, whilst 'passive immobilisation' ensures that this feature functions automatically under certain conditions (see below).

Passive Immobilisation: Engine cranking and running are disabled automatically **30 seconds after** the following sequence of events:

- The ignition is switched from on to off;
- The driver's door is opened.

A warning that immobilisation is in effect, is provided by the 'Alarm' tell tale in the instrument pack flashing on once per second (continuously lit if a door is open).

In order to mobilise the engine, press once the smooth button on the transmitter key; the tell tale will extinguish and the engine may be started. If the key is already turned to the ignition position ('II'), either of the two buttons on the transmitter key may be pressed to mobilise.

Note that for only the German market, if the ignition is not switched on within 4 minutes 15 seconds of the alarm being disarmed, immobilisation will be automatically activated.

To Arm the Alarm: Remove the ignition key, close (and lock) both doors, and press once the transmitter key button embossed with the padlock symbol. This command will be acknowledged by:

- The hazard lamps flashing three times;
- The 'Alarm' tell tale in the instrument pack flashing rapidly for 10 seconds (the arming period), then flashing once per second.

To Disarm the Alarm: Press once the transmitter key smooth button. This command will be acknowledged by a single flash of the hazard lamps, and the alarm tell tale going out. The same disarming command applies if the alarm has been triggered, and the horn is sounding.

Note that some variations to the alarm operation may apply in certain territories, according to local regulations.

Transmitter Battery Replacement: Each of the transmitter keys is powered by a Panasonic CR2032 3V battery. With normal use, these should last between 6 and 9 months. To ensure continuity of trouble free operation, it is recommended to replace both batteries at 6 monthly intervals:

1. Split the transmitter case using a finger nail or blade in the case jointline.
2. Slide the battery out of its keeper, and insert the new, taking care to match the polarity marking.
3. Snap the case halves together.

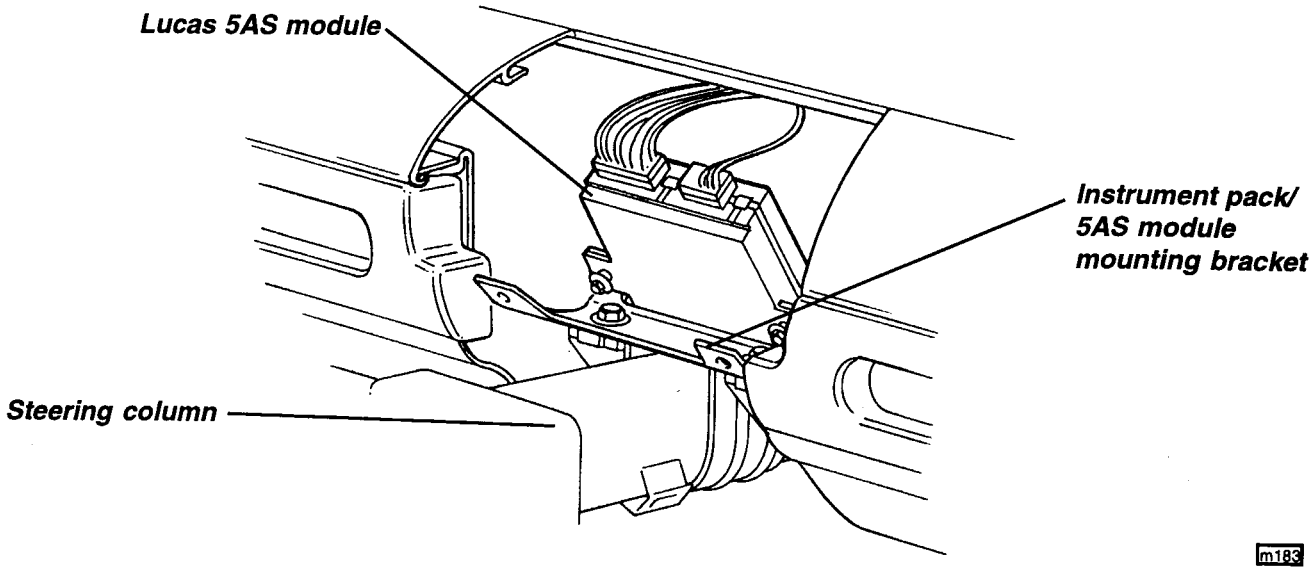

The 5AS module is mounted behind the fascia on the steering column upper bracket, and may be accessed after removal of the column shrouds and instrument pack (see sub-section BN.12). For diagnosis of alarm system faults, see sub-section MN.2.

Upgraded Vehicle Security Alarm - Cobra Goldline 6019HF

The optional upgraded vehicle alarm includes the following security features:

- Ingress protection using sensing switches on the front bonnet, engine lid and both doors;
- Switchable intrusion sensing in the passenger compartment using a microwave sensor;
- Self powered siren for strident warning even if the vehicle battery supply is interrupted;
- Passive engine immobilisation after 60 second delay.
- Dynamic (changing) coding of the transmitter key to minimise the possibility of code copying.

Passive Immobilisation: Engine cranking and running are disabled automatically **60 seconds after** either:

- the ignition is turned off;
- the alarm is disarmed.

A warning that immobilisation is in effect, is provided by the 'Alarm' tell tale in the instrument pack lighting steady.

In order to mobilise the engine, press once the embossed red transmitter button (with the ignition key in any position); the alarm tell tale will switch from steady to flashing illumination, and the engine may be started. If, however, the ignition is not switched on within 60 seconds, passive immobilisation will again be activated.

To Arm the Alarm: Remove the ignition key, close the front bonnet and engine lid, and close (and lock) both doors. The roof may be either raised or stowed. Press once the embossed red transmitter button. This command will be acknowledged by:

- two flashes of the hazard lamps accompanied by two short buzzes;
- the alarm tell tale on steady.

The engine will be immobilised immediately on the arming command, but other alarm functions require an arming period of about 30 seconds before becoming fully active. If the alarm is armed whilst a door, bonnet or engine lid is open or ajar, the warning buzzer will sound continuously before, after a period of 40 seconds, the siren is sounded.

When the alarm is fully armed, triggering will occur if:

- a door, bonnet or engine lid is opened;
- movement within the passenger compartment is detected;

When triggered, the self powered electronic siren will sound and the hazard warning lamps flash. After 30 seconds, these functions will switch off and automatically reset, ready for any further triggering input. If the

triggering signal is still present (e.g. if a door is left open), the alarm will repeat after a short delay, and continue in this sequence for a total of ten cycles.

To Disarm the Alarm: Press once the embossed red button on the transmitter key. This command will be acknowledged by:

- a single flash of the hazard lamps, accompanied by a short and a long buzz;
- the alarm tell tale changing from steady to flashing illumination.

Note that the flashing of the tell tale prior to next switching on the ignition, provides an indication as to whether or not the alarm had been triggered during the last armed period. If the flashing is regular at one per second, no triggering had occured, and after 30 seconds the passive immobilisation will take effect and the tell tale light steady (see above).

If the flashing is irregular:

- *a single flash followed by a 2 second break* indicates that a door, bonnet, or engine lid sensor had been triggered during the last armed period.
- *3 flashes followed by a 2 second break* indicates that the microwave sensor (interior movement sensor) had been triggered during the last armed period.

Note that if the alarm is triggered and is disarmed when the siren is sounding, the first press of the red button will silence the siren but leave the system armed. Press a second time to disarm.

Switching Off Interior Movement Sensing: If an animal is to be left in the vehicle, the alarm can be armed without the microwave sensor operating; First arm the system in the usual way by pressing once the red button. Then within 20 seconds, press once the blue button. This latter action will switch off the microwave sensor, with an indication being provided by the alarm tell tale flashing rather than being on steady. Note that the sensor will be automatically reinstated next time the alarm is armed.

Alarm Override Switch

A pair of alarm override and immobiliser touch keys are supplied in order to provide for the following situations:

- Vehicle servicing where the battery is to be disconnected;
- Long term parking;
- Loss of both transmitter keys.

The power sensing circuitry of the alarm will trigger the siren if the power supply is interrupted, regardless of the arming status. If the main vehicle battery is to be disconnected, and triggering of the alarm is to be avoided, it is necessary first to turn off the alarm system using the special override key. Fit the special key into the switch on the siren housing in the top of the passenger footwell, and turn counterclockwise. When work on the car has been completed, and the battery reconnected, ensure that the alarm is activated by turning the override key clockwise.

Alarm override key operation

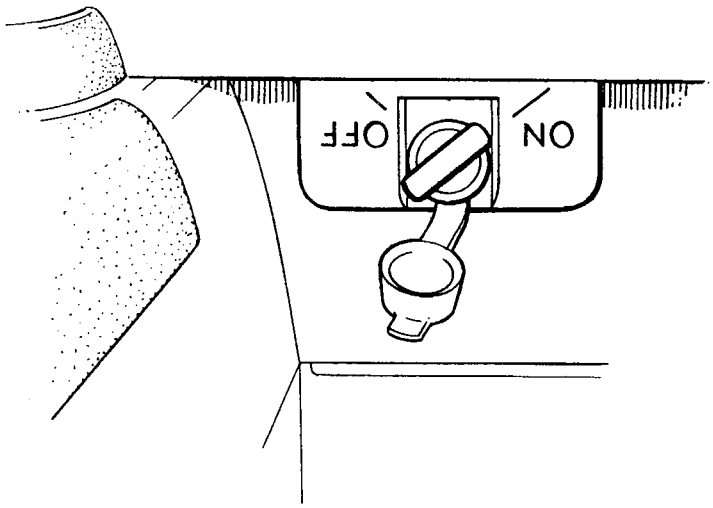

Ohs54a

Although the alarm system draws only a tiny current, if the vehicle is to be parked for an extended period of time (over three weeks in summer, or two weeks in winter), it is recommended to reduce current drain to a minimum by switching off the alarm system with the override key, and utilising other security measures, including the (automatic) immobilisation feature, as may be deemed appropriate.

The override facility may also be used in order to allow recovery of the vehicle in extreme conditions, for example if both transmitter key batteries have been allowed to run down, or are lost or faulty. The immobilisation feature will remain operative and must be overridden by switching on the ignition and inserting the **immobiliser touch key** into its socket on the side of the column shroud for about a second until the adjacent LED is extinguished. In order to protect against the loss of all keys, it is essential that the alarm override keys and immobiliser touch keys are kept separate from the transmitter keys, but the owner should be reminded that if the car is to be left for servicing or repairs, the **override key must be available to the technician.**

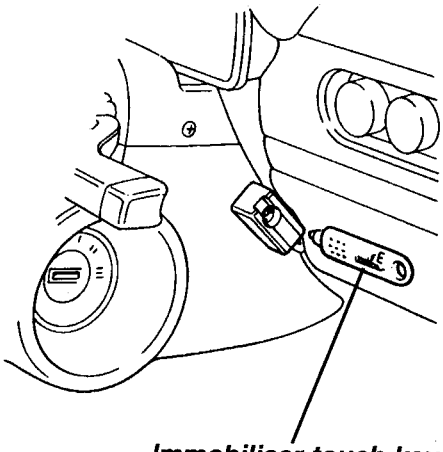

Immobiliser touch key ohs55a

Dynamic Transmitter Coding: Each time a transmitter key is used, the coding in both transmitters and the control unit is changed for optimum code copying protection. When using a transmitter which was not last used to operate the system, it will be necessary on the initial command, to press the red button twice in order to synchronise the codes in the three elements. Be sure to press the button for a whole second to allow the complete code to be transmitted.

Functional Test: To test that the alarm system is operating correctly, carry out the following test procedure:

1. Arming the System:
   a). Ensure that the front bonnet, engine lid and both doors are fully closed.
   b). Open the driver's window.
   c). Press once, the transmitter embossed red button (if the battery has been disconnected, press the button twice for a full second each time).
   Two flashes of the turn indicators and two buzzes? (YES)
   Illumination of the alarm LED constant? (YES)

2. Door, Front Bonnet & Engine Lid Switches (all actions must be within 30 seconds of arming or siren will sound):
   a). Open driver's door; *Buzzer sounds? (YES).*
   b). Open passenger's door; *Buzzer sounds? (YES).*
   c). Open front bonnet; *Buzzer sounds? (YES).*
   d). Disarm system.
   e). Open engine lid.
   f). Arm system; *Buzzer sounds? (YES).*
   g). Close engine lid; *Buzzer stops? (YES).*

3. Disarming the System:
   Press once the transmitter embossed red button;
   One flash of the direction indicators, one short and one long buzz? (YES).
   Alarm LED changes to flashing state? (YES).

4. Microwave Sensor Setting and Test (The sensitivity of the microwave sensor is pre-set and should require no adjustment):
   a). Open the driver's window, close all doors, lids and roof, and arm the system.
   b). Wait for 20 seconds before moving an arm slowly through the open window towards the gear lever.
   Buzzer sounds? (YES).
   c). Disarm, then re-arm the system and wait for 20 seconds.
   d). Wave an arm just above the roof and windscreen.

Buzzer sounds? (NO).
e). Set up is okay.
f). If adjustment is required, remove the two circular plastic pieces holding the unit together, and separate the two halves of the case. Turn the adjuster screw (top left hand corner) as required, and repeat the test. Note: If the sensor detects an intrusion during the first 15 seconds after alarm arming, the inhibition period continues until 15 seconds elapses without the unit detecting an intrusion. Subsequent intrusions will not be detected for 4 seconds after the buzzer sounds.

5. Battery Back-Up/Siren Test:
a). Disarm the system before disconnecting the negative battery cable.
Alarm triggered.
b). Turn the siren off with the alarm override key.
c). Reconnect the battery and turn the siren back on (siren will sound).
d). Disarm the system with the transmitter red button (press twice for 1 full second each time).

6. Passive Immobilisation:
a). Disarm the system.
b). Start the engine and then turn off ignition. Wait for 60 seconds.
Two short flashes and buzzes? (YES).
c). Try to start engine.
Engine immobilised? (YES).
d). Press once the transmitter red button.
e). Try to start the engine.
Engine starts? (YES).

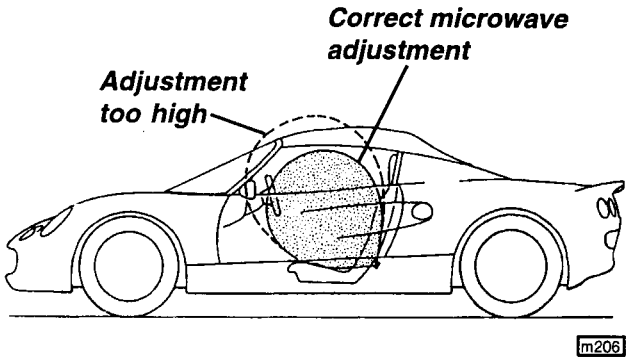

7. Emergency Override Key:
a). Arm the system and wait for 40 seconds.
b). Open the passenger door.
Alarm triggered? (YES).
c). Turn off the siren with the override key.
d). Try to start engine.
Engine immobilised? (YES).
e). Switch on ignition.
f). Apply immobiliser touch key to socket on steering column shroud.
g). Try to start engine.
Engine starts? (YES).
h). Stop engine.
i). Turn siren on with the override key (siren will sound), and disarm the system with the transmitter key (press the red button twice for 1 full second each time).

Transmitter Battery Replacement: Each of the transmitter keys is powered by a 12V battery type GP23. With normal use, these should last between 6 and 9 months. To ensure continuity of trouble free operation, it is recommended to replace both batteries at 6 monthly intervals:
1. Split the transmitter case using a finger nail or blade in the indent provided in the case jointline.
2. Pull out the battery and insert the new, taking care to match the polarity marking.
3. Snap the case halves together.

Component Location: The central processor unit (CPU) is mounted behind the passenger side fascia on the chassis scuttle beam, with the aerial routed alongside the harness. The buzzer unit is mounted alongside the CPU, stuck to the top surface of the beam by a self adhesive pad. Access to the CPU and buzzer unit is available after removing the passenger side dash panels - see sub-section BN.12.

The siren, including the override keyswitch, is fixed to the top of the passenger footwell, and the immobiliser module is mounted to the rear of the engine management ECM on the electrical services plate at the left hand side of the rear luggage compartment, protected by a rivetted cover. The microwave sensor is secured to the cabin rear bulkhead, between the seats.

Note that the Lucas 5AS module is still used as with the base alarm system, in order to communicate with the engine management ECM. The 5AS module is mounted behind the fascia on the steering column upper

bracket, and may be accessed after removal of the column shrouds and instrument pack (see sub-section BN.12).

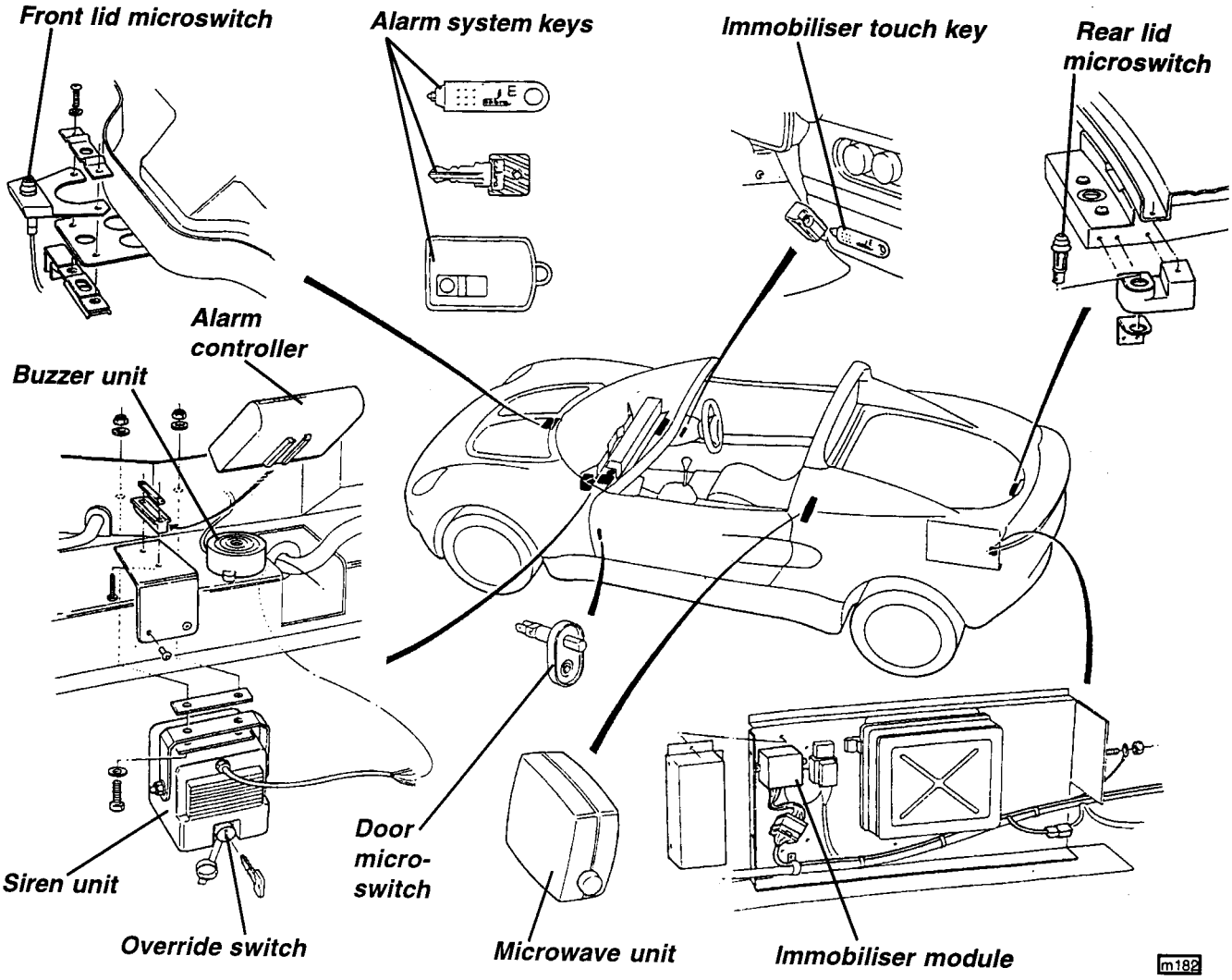

MN.2 - 'LOTUS CHECK' SCANNER TOOL

In order to provide for communication with the '5AS' vehicle security system electronic control module, a hand held electronic scanner tool, 'Lotus Check' (part number T000T1346), may be plugged into a special 16 terminal harness connector socket, known as a Data Link Connector (DLC), located next to the engine management ECM at the left hand side of the rear luggage compartment. The 'Lotus Check' tool allows the following operations to be performed:

i) Systems Check (**Not applicable on Cobra cars**) - Checks door switches and immobilisation function.
ii) ECM matching - To programme the engine management ECM to recognise the coded signal from the 5AS security module in order to allow the immobilisation function to operate. Necessary if either the engine ECM or 5AS module is replaced.
iii) Transmitter key matching (**Not applicable on Cobra cars**) - To programme the 5AS module to recognise the signal from the transmitter keys. Necessary if the transmitters are replaced.
iv) User password changing or recharging.
v) MEMS 1.9 engine management diagnosis - see sub-section EMN.3.

Contents of the Lotus Check Tool T000T1346

The Lotus Check Tool T000T1346 is supplied in a suitcase, and contains the following items:

- Scanner Tool with LCD display panel;
- Printer;

- Power Harness;
- Adaptor Harness;
- MEMS 1.9 Programme Card;
- 5AS Security Programme Card;
- Security Module ('Dongle');
- Instruction Booklet.

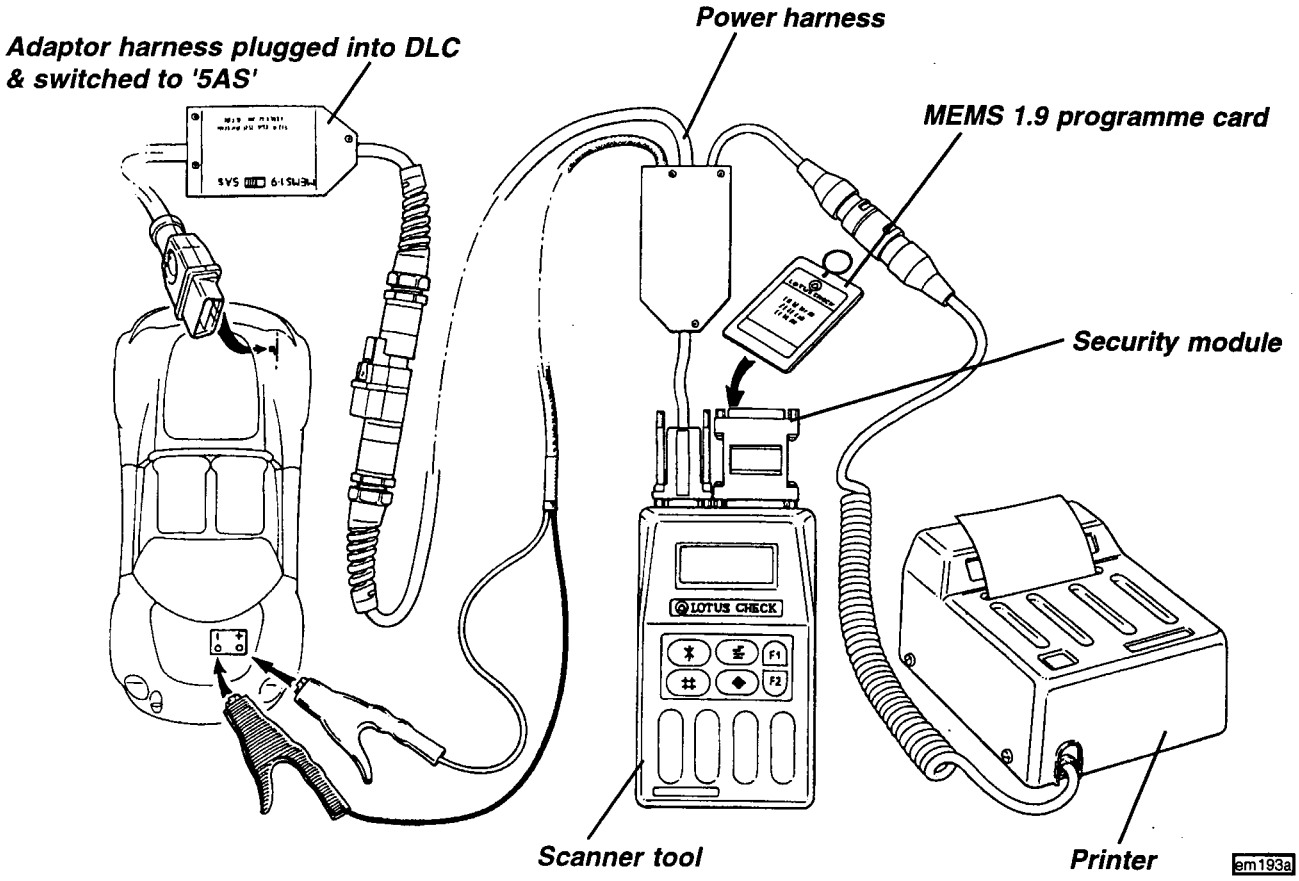

To Connect 'Lotus Check'

To connect the equipment, proceed as follows:

i). Open the front and rear compartment lids;
ii). Connect the power harness crockodile clips to the battery in the front compartment;
iii). Plug the adaptor harness into the 16 terminal diagnostic link connector (DLC) next to the MEMS 1.9 ECU at the left hand side of the rear compartment, and also connect to the power harness;
iv). Select '5AS' on the adaptor harness switch;
v). Plug the power harness into the scanner tool and the printer;
vi). Insert the Security System programme card into the scanner tool slot, label uppermost.
vii). Plug the security dongle into the scanner tool.
viii). Press F2.

Password Security System

In order to control and monitor the security operations performed in the field using the Lotus Check, a password system is used in conjunction with nominated supervisors at each dealership. On receipt of the Lotus Check kit, the accompanying 'Supervisor Password' form should be completed and telefaxed to Omitech Instrumentation. Note that the serial number etched on the back of the security programme card must be quoted. Omitech will then telephone the supervisor with a password, comprising a sequence of eight button presses on the six button scanner tool. The password should be noted and kept secure by the supervisor for only his/her use.

This password allows 50 security operations to be performed, where such an operation is defined as either ECM matching, or transmitter key matching. The supervisor allocates between 1 and 20 operations, or charges, to a 'user' password of his/her choice, which is used by a technician when performing the actual task.

The user password may be changed or recharged by the supervisor at any time. Each time a security operation is performed, a charge is debited against that supervisor password, with the remaining number of charges advised via the scanner display. When this number reduces to 22 or less, the supervisor is advised to apply for a new password, which cannot be done before this time. Application for a second, and subsequent supervisor passwords, is made via the Password Renewal form, which should be completed and faxed to Omitech Instrumentation, together with a printout from the 'Set Up' menu which is required for security data analysis. A small administrative charge will be made for the second and subsequent passwords.

System Check (**Not applicable on Cobra cars**)

This may be selected from the main menu in order to check the operation of the door switches and immobilisation system. Select 'Level 2' from the subsequent menu, and follow the instructions displayed on the scanner.

Note: 'Disarming alarm using key access codes/transmitter' - Key access codes are not applicable to the Elise; Disarm using the transmitter.

ECM Matching

This facility is available from the 'Set Up' - 'User' menu, and is required if either a MEMS 1.9 ECM, or 5AS Security ECM is replaced. The 5AS module sends a coded signal to the MEMS module in order for the immobilisation feature to operate, and if either module is replaced, the MEMS module must be programmed to recognise the signal.

Note that the last eight digits of the Vehicle Identification Number are required to be entered, but that the third of these digits is called for as an alpha character rather than the actual numeric; For this purpose, disregard the third character.

Transmitter Matching (**Not applicable on Cobra cars**)

Each transmitter key has a unique coded signal which the 5AS unit must be programmed to recognise. Up to four transmitters may be matched with a module, but all must be available and matched in the course of one operation.

Select 'Set Up' - 'User', and after entering the password and VIN (see above), select 'Transmitter' and follow the displayed instructions.

User Password Changing or Recharging

Select 'Set Up' - 'Supervisor', and enter the supervisor password. Follow instructions displayed.

MN.3 - SWITCHES & INSTRUMENTS - DRIVER'S INFORMATION

Ignition/Starter Switch/Steering Lock

The switch/lock is located on the right hand side of the steering column.

I - Insert the key into the slot, and turn clockwise to position 'I' to unlock the steering column. If the key is reluctant to turn, wriggle the steering wheel to ease the load on the steering lock.

II - Turn to position 'II' to switch on the ignition and operate auxiliary equipment.

III - Turn further clockwise to 'III' against spring pressure to operate the starter motor. As soon as the engine starts, allow the key to return to position 'II'. To stop the engine, turn the key back to 'I'.

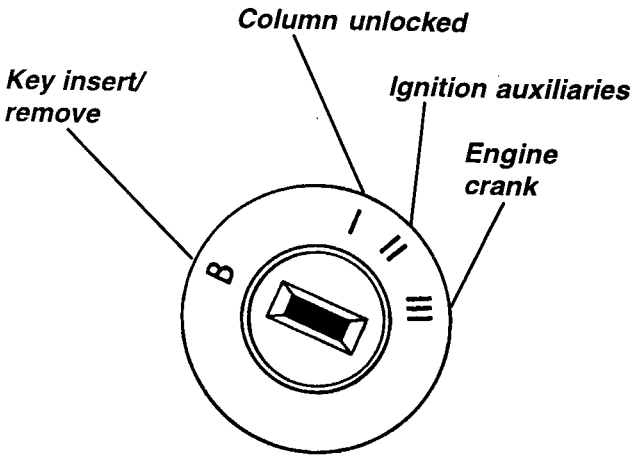

ohs33e

Passive Immobilisation: If the ignition has been switched off for longer than 30 seconds, it is possible that the passive immobilisation security feature may operate (dependent on type of alarm fitted) and disable the ignition and starter circuits; press the appropriate transmitter key button as directed in sub-section MN.1.

B - To remove the key, turn fully counterclockwise to 'B' and withdraw. The steering column lock will be activated when the key is withdrawn but may not engage until the steering is turned and the mechanism is aligned.

DO NOT leave the ignition switched on for long periods without the engine running, since although the ignition system itself draws no current when the engine is stopped, a battery drain will occur through other circuits even when auxiliary equipment is not being used. Always remove the key when leaving the car in order to lock the steering column and to guard against a flat battery.

WARNING:

- **Do not push or tow the car unless the key is first used to unlock the column and is then left in the lock.**
- **Never withdraw the key until the vehicle is stationary.**
- **Do not leave the ignition key in position when leaving a parked car, to protect against theft, and to ensure the safety of any children remaining in the vehicle.**

TELL TALE LAMPS

Bulb Check

In order to check that the warning systems are operative, all the tell tale lamps (except the 'Alarm' tell tale; see sub-section MN.1) should light for about six seconds when the ignition is turned on. If any lamp should fail to light, it is possible that the bulb or warning circuit may be faulty.

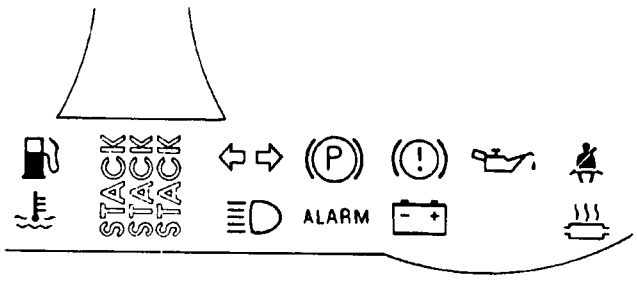

ohs19

Turn Tell Tale

When the left hand or right hand turn indicators are operating, this green tell tale flashes in unison. The flasher relay may also be heard to operate. If the tell tale fails to light, or flashes at an unusual or irregular rate, the operation of the turn indicator lamps should be checked immediately.

Parking Brake Tell Tale

This tell tale will glow red with the ignition switched on whenever the parking brake is applied. Driving the car with the brake not fully released will cause overheat damage to the rear brakes. Each time the parking brake is released, check that the tell tale goes out.

Brakes Tell Tale

If the red brakes tell tale should light any time after the check period, stop the car immediately, as the level of brake fluid in the master cylinder reservoir has fallen to a dangerously low level, possibly caused by a hydraulic leak in one of the separate front or rear brake circuits. There is a danger that air may enter the hydraulic system and cause spongey operation and extended pedal travel. The split brake circuit should ensure that emergency braking will remain, but the car should not be driven until the fault has been rectified.

Oil Pressure Tell Tale

This red tell tale warns of low engine oil pressure. The lamp will be lit whenever the ignition is on and the engine is stopped, but should extinguish as soon as the engine is started. If the lamp fails to go out after engine start up, or comes on when the engine is running, stop the engine immediately and do not restart until the cause has been investigated and rectified. Continuing to run the engine with little or no oil pressure could cause major internal damage, possibly resulting in seizure.

Seat Belt Tell Tale

The red seat belt tell tale is provided as a reminder, and will remain lit until the driver's seat belt is

fastened. Both driver and passenger should always wear the seat belts, no matter how short the journey.

Main Beam Tell Tale

This lamp glows blue whenever the headlamp main beams are operating.

Alarm Tell Tale

The red vehicle security alarm tell tale indicates the status of the alarm/immobilisation system. For full details see sub-section MN.1 - Vehicle Security Alarm.

Battery Charging Tell Tale

This red tell tale will light whenever the ignition is on and the engine is stopped. If it lights any time that the engine is running, the battery is not being charged, which may be due to a broken alternator drive belt, or an electrical fault. Urgent attention is required, but as the engine coolant pump is independently driven, the car need not be stranded, subject to battery condition and local circumstances.

Catalyst Overheat Tell Tale (Japan only)

This tell tale will glow red if an engine fault occurs which results in the temperature of the catalytic converter rising to a level liable to cause damage to the converter and/or engine. Stop the vehicle in an area free of combustible materials (dry grass, leaves etc.) and allow the converter to cool for several minutes before proceeding with caution. The fault should be investigated without delay.

INSTRUMENTS

Speedometer

This instrument displays road speed in either MPH (with a secondary scale in km/h), or km/h according to market.

Tachometer

The tachometer indicates engine speed in revolutions per minute. Maximum safe engine speed is 7,000 rpm at which point the engine management system operates to cut off the fuel supply, and safeguard the engine from overspeeding.

Do not run the engine continuously at its maximum speed, or allow overspeeding to occur on the overrun by changing down through the gears too early, as this imposes very high loads on engine components, leading to premature wear and possible failure.

LCD DISPLAY PANEL

A liquid crystal display (LCD) panel is provided below the instruments in order to display fuel level, coolant temperature, total mileage and trip functions. The panel is blank until the ignition is switched on.

Fuel Contents Display

The top right hand corner of the LCD panel displays the approximate quantity of fuel available in litres. The fuel tank capacity is 36 litres, and the display reads as follows:

0 - 10 litres:	Display flashes 'Refill'.
11 - 34 litres:	Displays actual fuel quantity.
35 - full:	Display reads 'Full'.

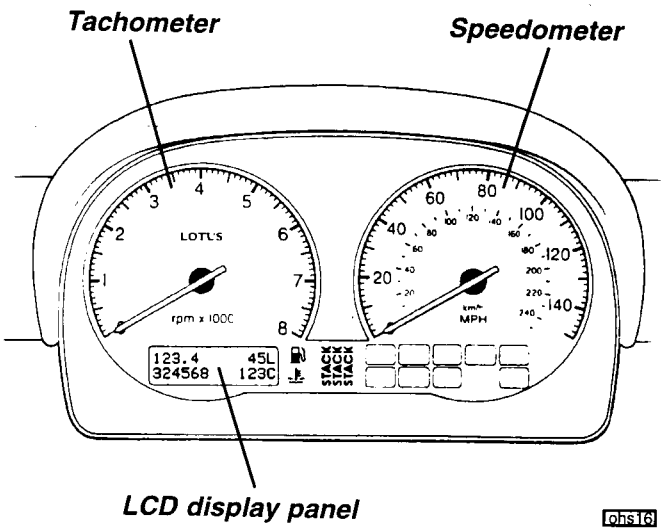

In order to ensure the vehicle is not stranded, and to protect against the potentially damaging effects of fuel starvation, it is strongly recommended to refuel at the first opportunity after 'Refill' is displayed.

Coolant Temperature Display

The engine coolant temperature will be displayed at the bottom right hand corner of the panel as soon as the temperature reaches 40°C. The running temperature will fluctuate a certain amount as the operating conditions change, and during periods of idling or in heavy traffic, the temperature may rise to over 100°C, with

the cooling fan switching on at approximately 104°C. *The display will flash at temperatures over 100°C* in order to prompt closer monitoring of high temperatures, but as the pressurised cooling system has a boiling point of over 120°C, only if the temperature approaches this level need there be any cause for concern.

After a heavy snowfall, ensure that the radiator cooling outlet grilles in the front bonnet are cleared of snow before driving the car, or overheating may occur.

Odometer

An odometer (total distance recorder) reading is displayed at the bottom left hand corner of the panel, and is calibrated in the same units (miles or kilometres) as is the speedometer.

Trip Recorder

A trip recorder is provided at the top left hand corner of the panel, calibrated in the same units as the speedometer.

In order to zero the trip display, switch on the ignition, and press for a moment (less than 1 second), the small button on the steering column shroud between the ignition switch and steering wheel. This dual function button also controls the panel illumination - see 'Instrument & Switch Illumination'.

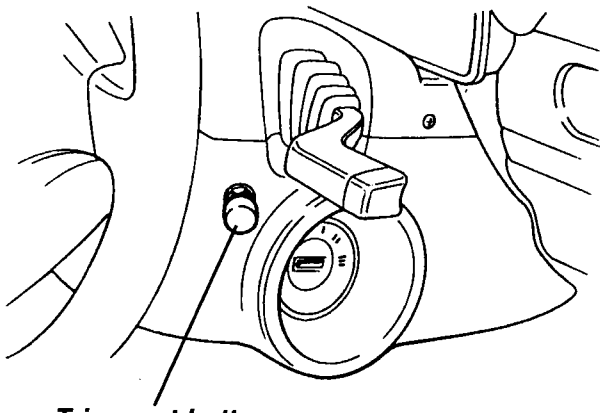

ohs28

FASCIA SWITCHES

Sidelamp Switch

A green tell tale window within the switch button is back lit when the ignition is switched on to help locate the switch. Pressing the switch will switch on the sidelamps and panel illumination, and brighten the switch button tell tale. The switch operates with or without ignition. Press a second time to switch off.

Master Lighting Switch

A green tell tale window within the switch button is back lit illuminated when the ignition is switched on to help locate the switch. Pressing the switch, which operates with or without ignition, will switch on the headlamps in addition to the sidelamps and panel illumination, irrespective of the sidelamps switch position. The switch button tell tale brightens when the switch is pressed. Press a second time to switch off.

Rear Fog Lamp Switch

An amber tell tale in the switch button is back lit when the sidelamps are switched on in order to help locate the switch. A single fog guard lamp is fitted on the offside rear of the car, and is operative only in conjunction with the headlamps. When the switch is pressed, the integral tell tale brightens only if the headlamp switch is also pressed, and the fog circuit is operating. Press the switch a second time to switch off.

In some territories, rear fog lamps may be used legally only in conditions of 'seriously reduced visibility'. Be aware that indiscriminate or forgetful use of the rear fog lamp can cause distraction and discomfort to following traffic.

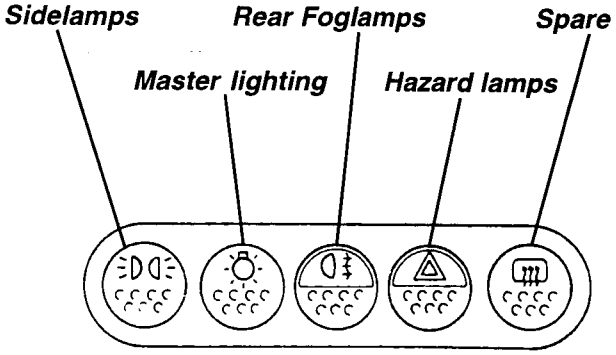

ohs17

On some cars, as a legal requirement, the rear fog lamp circuit is designed to switch off automatically whenever either the headlamps or the ignition is next turned off, regardless of the rear fog switch position. In order to reactivate the rear fog lamp, the switch must first be pressed 'off' before pressing 'on' once again. The switch tell tale lights up only when the fog lamp circuit is operating.

Hazard Warning Lamps Switch

A red tell tale in the switch button is back lit when the sidelamps are switched on in order to help locate the switch. The switch is operative at all times, and when pressed flashes all the turn indicator lamps, and the switch tell tale, in unison.

This facility should be used when the vehicle has to be stopped on the highway in abnormal circumstances, where a warning to other traffic would be prudent. Use of the hazard warning lamps may be subject to local traffic laws, with which drivers should familiarise themselves.

Instrument Illumination

A small button is provided on the steering column shroud, between the ignition switch and steering wheel, by which the brightness of the instrument illumination may be adjusted. To cycle through the four levels of brightness, press and hold the button, and release at the desired setting.

This dual function button also resets the trip distance recorder - see 'Trip Recorder'.

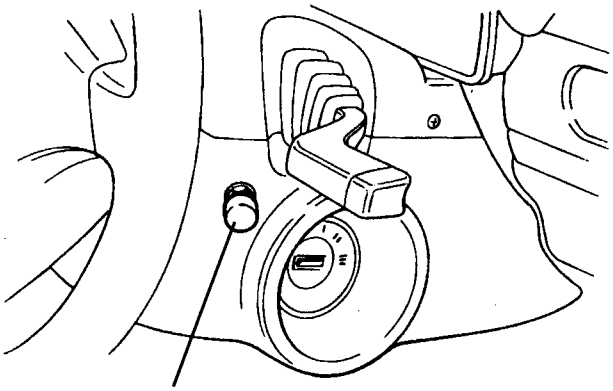

Instrument illumination button

ohs28

Cigarette Lighter

A cigarette lighter is fitted in the trim shroud ahead of the gear lever, and is operative at all times. To use the lighter, press the centre button of the knob to activate the heating circuit. When the element has been sufficiently heated, which takes only a few moments, the button will spring back out. The lighter may then be withdrawn for use. Care should be taken when handling the hot lighter to avoid contact other than with its target.

An illumination ring around the lighter is backlit red when the lights are switched on.

WARNING: Do not leave small children unattended in the car since careless use of the cigarette lighter could be dangerous.

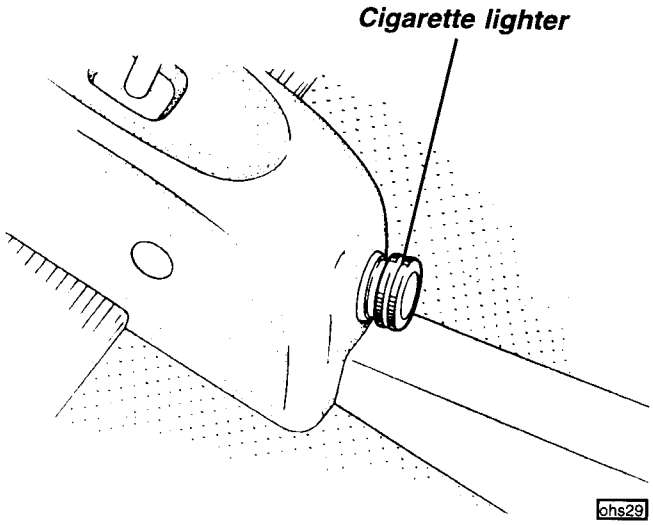

ohs29

COLUMN SWITCHES & HORN

Headlamp Dipswitch/Flasher/Turn Indicators

The steering column left hand lever switch controls the headlamps main beam/dip, headlamp flash and turn indicators.

Headlamp Dipswitch: To switch on the headlamps, press the master lighting switch in the fascia outboard of the steering column. The left hand lever switch is then used to select main or dip beam. Main beam is obtained with the lever furthest forward, away from the steering wheel, and dip beam with the lever moved back towards the wheel. The main beam tell tale lamp in the instrument panel lights when main beam is operating.

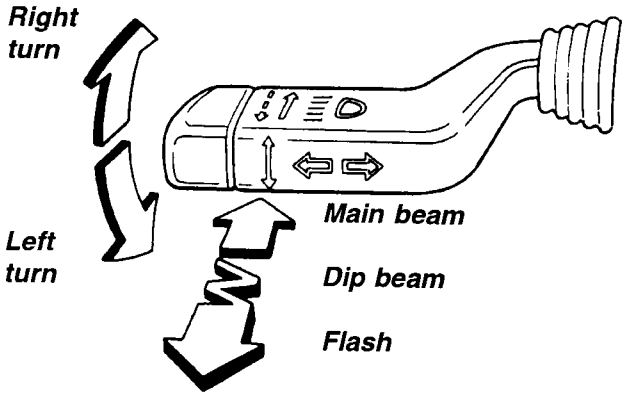

ohs32

Note that on cars equipped with the optional driving lamps mounted in the radiator air intake, the bonnet mounted headlamp main beams are supplemented by the two driving lamp beams.

Headlamp Flasher: The headlamp flasher is operative at all times. If the lever is pulled towards the steering wheel against spring pressure, the headlamp main beams will light.

Turn Indicators: The turn indicators operate only with the ignition switched on. Move the lever down to indicate a left hand turn, and up for a right hand turn. The switch will be cancelled when the steering wheel is returned to the straight ahead position. For convenience, when signalling a lane change, pressing the switch up or down only lightly, will allow it to return under spring action upon release.

Windscreen Wiper/Washer

The steering column right hand lever switch controls the windscreen wiper and washer, and is operative only with the ignition switched on. Never use the wiper on a dry screen.

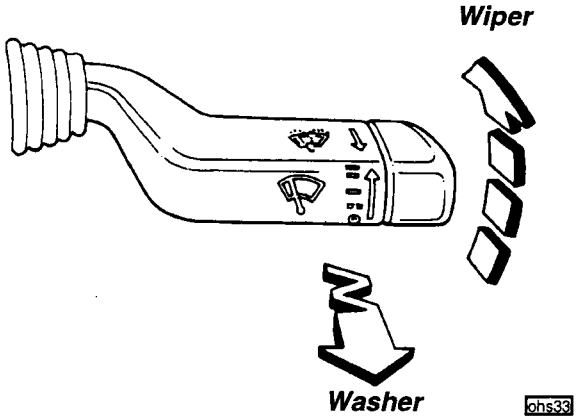

Windscreen Wiper: The wiper is controlled by the up/down position of the lever switch, which operates as follows:

- Moved fully down, the wiper is switched off.
- Move up to the first position for intermittent wipe. The wiper will make one sweep about every five seconds.
- Select the next position for normal wiper operation.
- Move fully upwards for quick wipe, to be used only in heavy rain.

Windscreen Washer: Two windscreen washer jets are provided, one each side of the wiper spindle. Pulling the control lever towards the steering wheel will operate both the washer pump and the wiper. When the switch is released, the wiper will continue for a further four sweeps.

Horn

The windtone horn, which functions at all times, is operated by a central button in the steering wheel.

Interior Lamp

An interior lamp is mounted centrally in the lower section of the dash, and is equipped with a three position switch:

- Switch forwards; lamp is switched on with or without ignition.
- Switch central; lamp is switched off.
- Switch rearwards; a driver's courtesy mode applies, where the lamp is switched on whenever the driver's door is opened, and goes out when the door is closed. Note that the lamp is not operated from the passenger door, whose sensing switch is used only for the alarm system.

Inertia Switch

The safety inertia switch is designed to operate on impact, such as will occur in an accident, to switch off the fuel pump, and thus minimise any fire hazard.

The inertia switch is mounted at the left hand front corner of the rear luggage compartment, behind the engine, and is reset by pressing the rubber diaphragm button on the top of the unit.

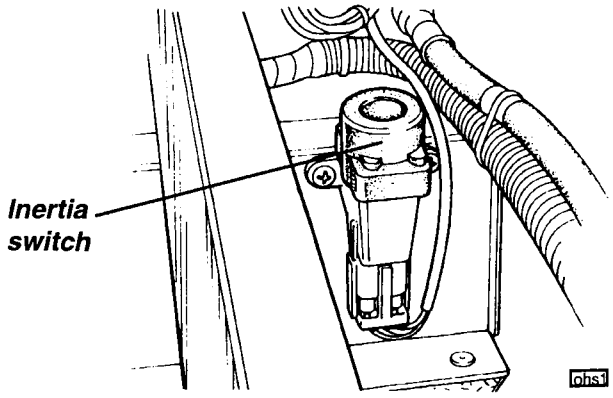

MN.4 - COMPONENT LOCATION & FUSE RATINGS

Main Fusebox 'A'

The main fusebox is located in the front services compartment, on the passenger side, and is protected by a clear plastic cover. Twelve 'Littel' type fuses are fitted alongside four relay modules. The fuses are numbered, and coloured according to their amperage rating, and may be pulled out from their slots using the fuse extractor tool stowed within the fusebox. Spare fuses are also housed within the fusebox.
Note that the fusebox position is reversed on left hand drive cars.

Fuses

Slot	*Rating*	*Circuit*
1	3A	Rear fog lamp
2	2A	Alarm ignition
3	15A	Interior fans
4	15A	Wiper motor
5	3A	Reverse lamp
6	7.5A	Direction ind.
7	5A	Ignition services
8	7.5A	Stop lamps & batt serv
9	10A	Hazard lamps
10	7.5A	Horn
11	10A	Alarm pwr. & int. lamp
12	25A	Cooling fan

Relays

A	Horn
B	Cooling fan
C	Dip beam
D	Main beam

RHD shown

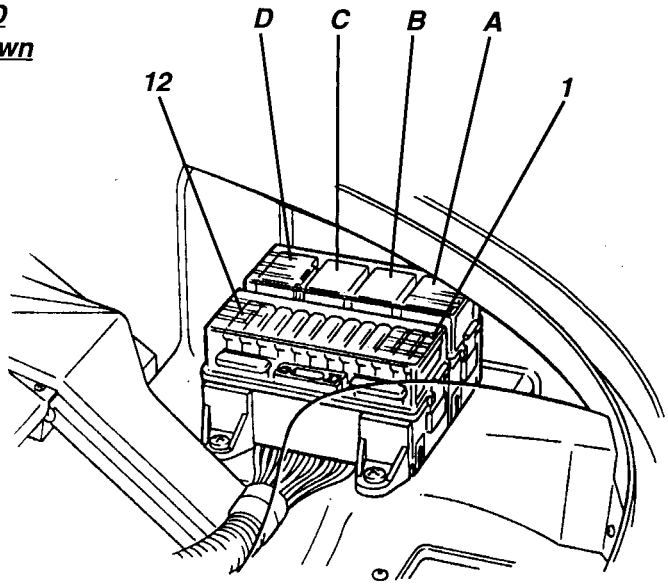

ohs46

Fusebox 'B' (for cars 'Feb.'97 on, see also MN.10)

Removal of the wiper motor cover (two screws) allows access to a second fusebox containing 4 Littel fuses, and also to a pair of Maxi fuses. Note that the order of fuses on LHD cars may be reversed.

Slot	*Rating*	*Circuit*
13	20A	Radio
14	20A	Cigar lighter
15	5A	Sidelamps LH
16	5A	Sidelamps RH
A	50A	Lighting (N & NU cables)
B	50A	Ignition switch (N & NW cables)

RHD shown

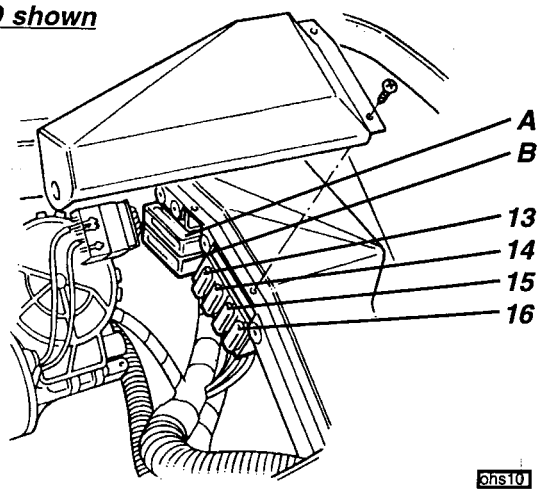

ohs10

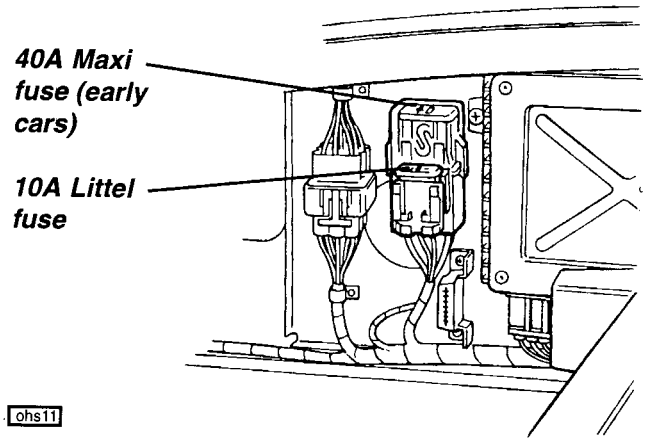

ohs11

On cars prior to Feb. '97, fuses for the engine management system (40A) and fuel pump (10A) are located on the LH side panel in the rear luggage compartment, to the rear of the engine management ECM. For later cars, see also sub-section MN.10.

The wash/wipe module, and hazard flasher relay are mounted behind the passenger side chassis scuttle beam. For the location of the vehicle alarm system components, see sub-section MN.1. Engine management components are detailed in Section EMN.

Fuse colours:

2A - Black;	10A - Red;
3A - Violet;	15A - Light Blue;
4A - Pink;	20A - Yellow;
5A - Orange;	25A - Clear.
7.5A - Brown;	

Component Location

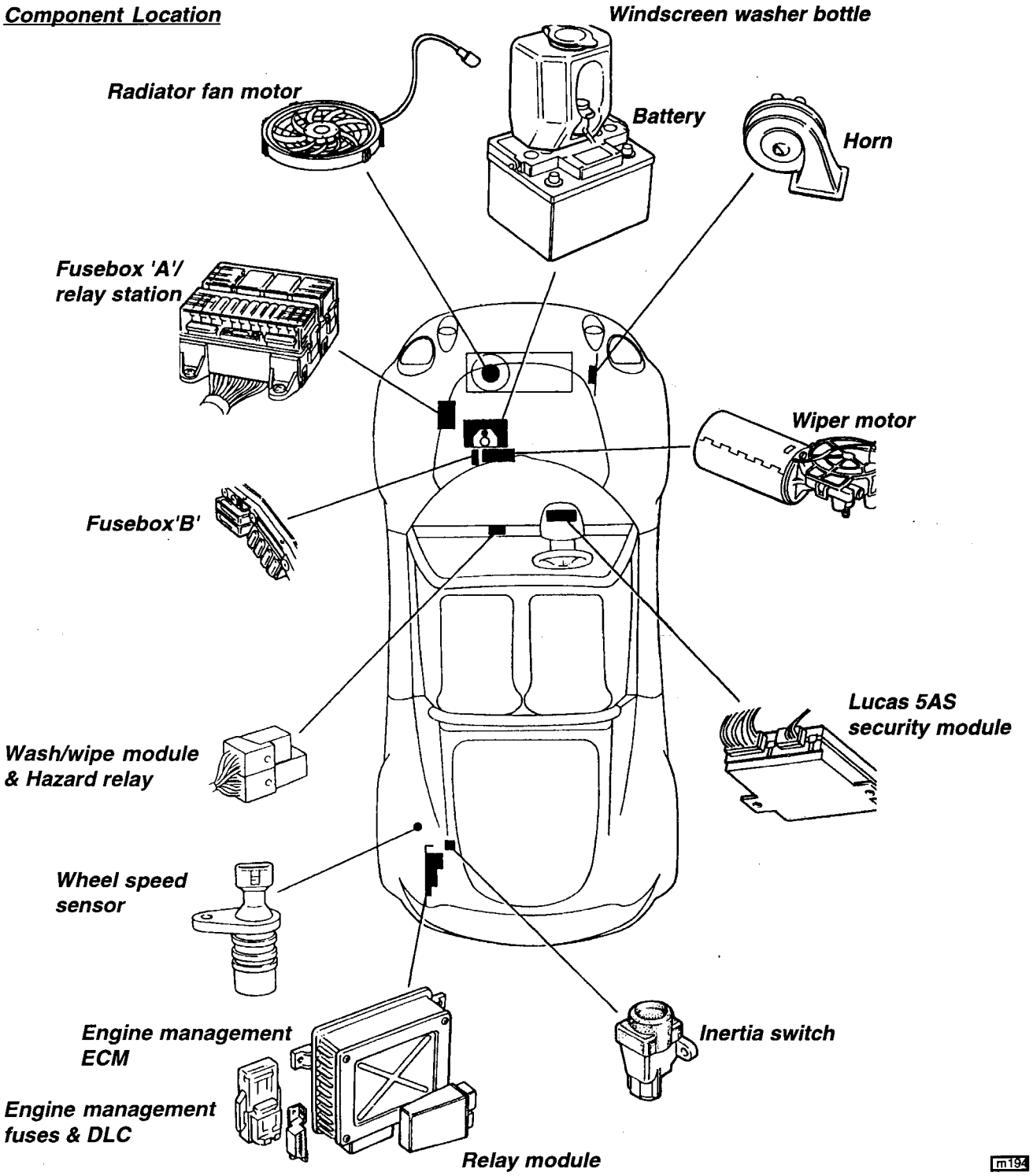

MN.5 - AUDIO EQUIPMENT

All cars are provided with a radio ISO connector and aerial lead, which on cars not built with an audio set, are tied back to the fascia harness. An ISO size hole is provided in the dash, requiring only that the moulded plastic finisher is replaced with a two part version - see sub-section BN.12. The audio power supply is switched with ignition.

Speaker Panels

Speaker wiring terminates in the vicinity of each cabin rear corner finisher (speaker) panel. To remove a panel, release the seat belt reel, remove the screw at the outboard top corner of the panel and at the inboard edge (also anchors the luggage net), and pull the panel away from its Velcro fastening. The specified speakers are Alpine APE 1620 6½" (165 mm) co-axial 2-way, nominal 30W, peak power 90W, 4 ohms impedance. The speaker panels need to be fettled to accommodate the selected speakers.

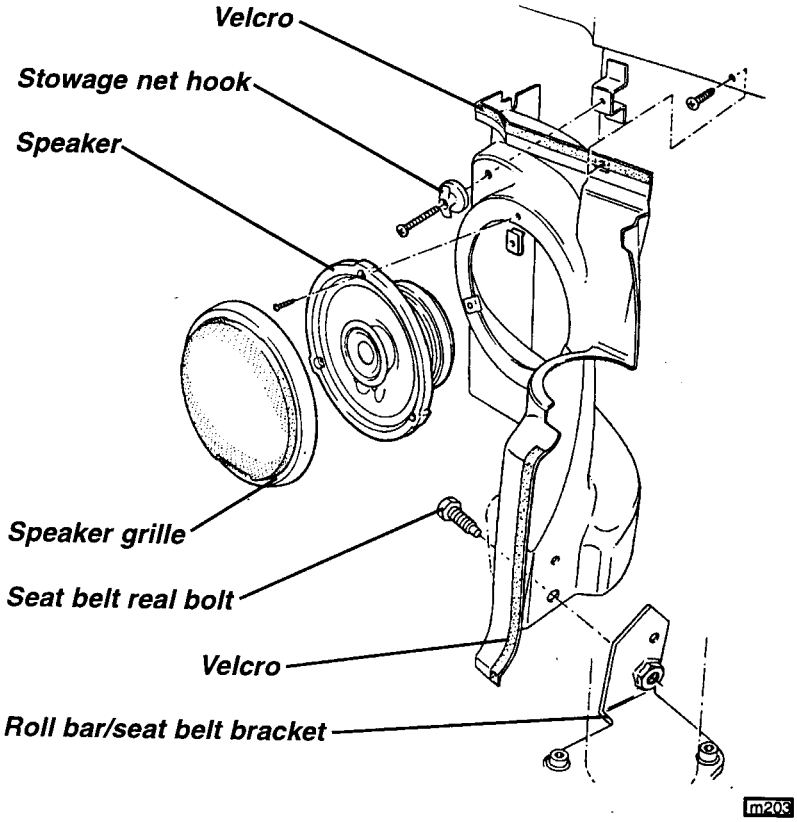

Transformer Aerial

The maintenance free, transformer type, flexible aerial is mounted on the engine cover, and features an antenna mast which may by unscrewed by hand from its base if necessary to guard against vandalism. All cars are fitted with an aerial co-axial lead routed between the radio plug and the LH front corner of the engine bay, from which point an aerial extension lead is required to connect with the aerial. The aerial amplifier lead is built into the main harness, and is tied back at the corner of the engine bay. The co-axial cable extension and the amplifier lead are routed along the top of the engine bulkhead before connecting with the aerial base, with a heat reflective sleeving used between the bulkhead and aerial to protect the leads from heat damage.

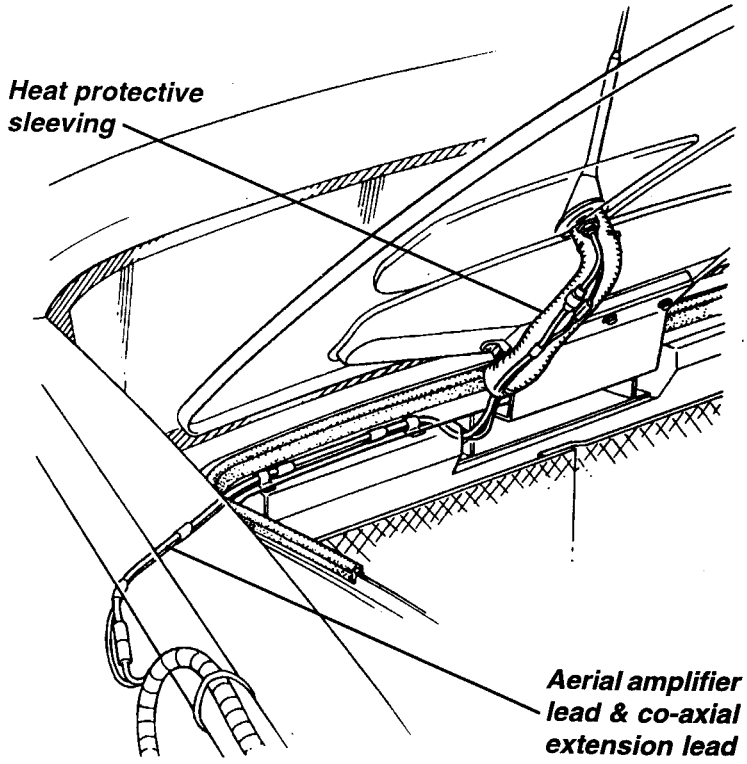

MN.6 - BATTERY, BATTERY CABLES & EARTHING POINTS

Battery

WARNING: POISON/DANGER - CAUSES SEVERE BURNS - KEEP OUT OF REACH OF CHILDREN. Contains sulphuric acid - avoid contact with skin, eyes or clothing. Antidote: External - flush with water; Internal - drink large quantities of water or milk. Follow with milk of magnesia, beaten egg or vegetable oil. Call physician immediately; Eyes - flush with water for 15 minutes and get prompt medical attention. Batteries produce explosive gases. Keep sparks, flames and cigarettes away. Ventilate when charging or using in enclosed space. Always shield eyes when working near batteries.

Battery Access

The 'maintenance free' battery is located in the front services compartment, in the chassis well beneath the windscreen washer bottle. No routine inspection or topping up of the electrolyte is required, but at intervals specified in the Maintenance Schedule, the battery terminals should be checked for security and condition, and protected with petroleum jelly.

For access to the battery, remove the washer reservoir by pulling upwards from its mounting bracket. To remove the battery, disconnect both battery cables (see below), and pull off the breather pipe from the outboard end of the battery. Release the three screws securing the battery clamp bracket to the chassis, remove the clamp bracket, and tilt the battery to release the lower edge from its retaining channel. Lift out the battery from its well taking suitable precautions with regard to the battery weight and difficult access.

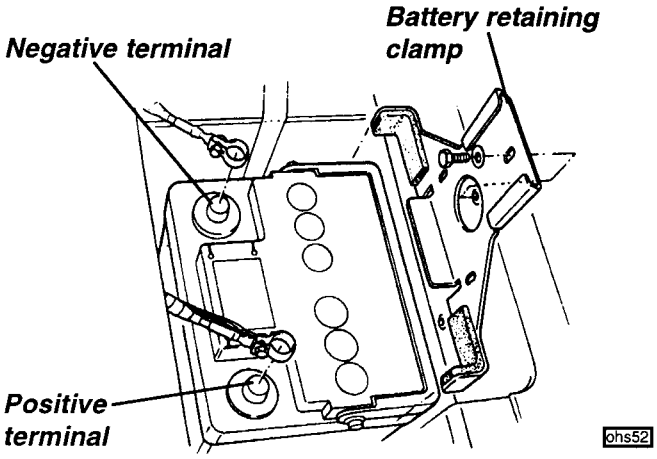

Refit the battery, with its terminals towards the front, by reversing the above procedure. Ensure that the breather pipe is connected and routed correctly, or corrosion damage to the chassis is likely to occur. Reconnect the battery cables as detailed below.

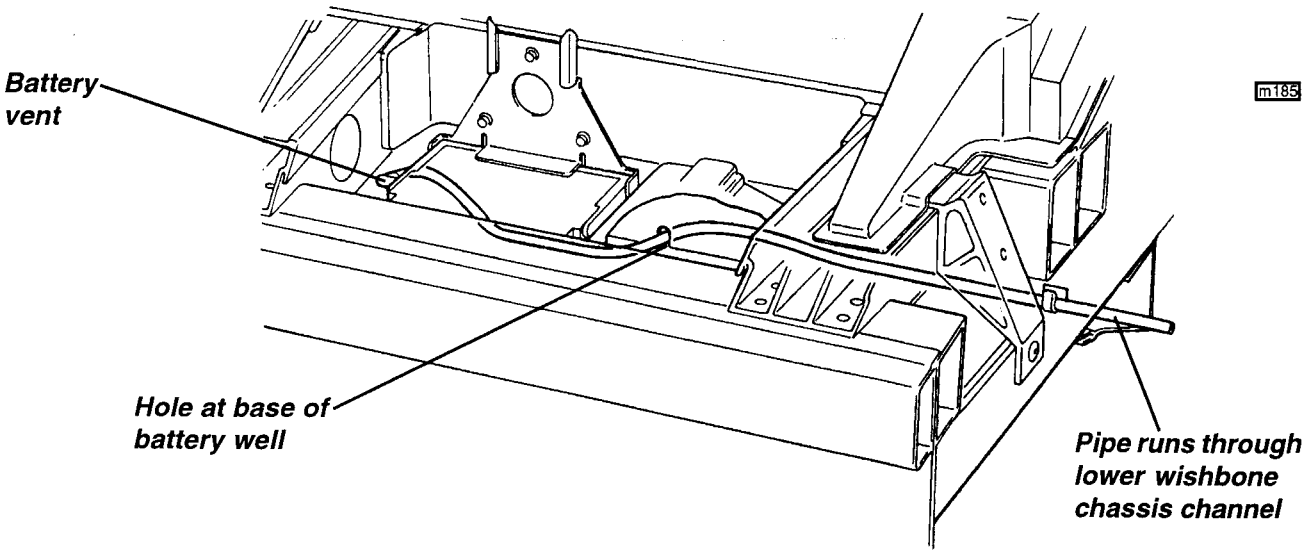

Disconnecting the Battery

If the battery is to be disconnected, the following precautions should be taken:

i) If the car is fitted with the Cobra alarm, in order to avoid triggering the alarm when the battery is disconnected, first turn off the alarm system using the special override key. Fit the key into the switch on the

siren housing in the top of the passsenger footwell, and turn counterclockwise.

ii) Wait for at least ten seconds after switching off the ignition to allow the engine management system to adjust the setting of some components ready for re-starting.

iii) Ensure that all electrical loads (e.g. lights) are switched off.

iv) If the vehicle is fitted with 'CATS' coded audio equipment, check that the security code is available for entering on reconnection.

v) Disconnect the **negative** (earth; black; '-') battery cable first, and re-connect last. If the battery positive terminal is inadvertently earthed (e.g. when using a spanner) whilst the negative terminal is still connected, the resultant short circuit with heavy sparking and current flow could cause serious burns.

Battery Reconnection

i) Check again that all electrical loads are switched off.

ii) Connect the positive battery cable first, followed by the negative (earth) cable.

iii) Be aware that the vehicle security alarm may be triggered by the action of battery re-connection. Have the alarm transmitter key ready to disarm the alarm (see 'Vehicle Security Alarm'). If applicable, turn the alarm system back on at the siren housing.

iv) After reconnection, a change in the engine performance characteristics may be noted for a period whilst the computer controlled engine management system 're-learns' some of its settings.

v) Where applicable, enter the 'CATS' code into the audio equipment.

Battery Charging

If the state of charge of the battery is in doubt, the specific gravity (s.g.) of the electrolyte should be checked using a hydrometer. An s.g. of 1.22 is typical of a 65% state of charge, considered to be the minimum serviceable condition.

If the hydrometer indicates that the battery needs recharging, the battery should first be removed to a well ventilated area to avoid a build up of fumes in the luggage compartment and to prevent damage to the car's electrical system. Observe the safety precautions listed above when removing the battery. Take care when handling the battery to avoid sharp knocks or shocks, and keep as upright as possible. Beware of the considerable weight of a battery, and take necessary precautions against personal injury. Charge the battery following the charger manufacturers instructions while observing these basic rules:

- If the specific gravity is over 1.22, there is no need to charge the battery and charging attempts will only increase the possibility of undesirable overcharge effects.
- Check that the electrolyte level is between the upper and lower markers on the battery case, and if necessary add distilled water.
- Depending on state of charge, temperature and charger capacity, the battery will accept a charging rate of between 3 and 50 amps. However, at high rates the battery may eject electrolyte through the vents, and/or become overheated; Reduce the charging rate and/or stop for a time to allow the battery to cool. The recommended bench charge rate is 4 amps.

When the battery is fully charged (s.g. approx. 1.28), allow the battery to stand for an hour before refitting into the battery well and reconnecting the leads; see above.

Battery Leads

The positive battery cable, on both right and left hand drive cars, is routed through the left hand end of the scuttle baffle panel and down ahead of the door hinge post, to run along the outside of the chassis side rail to the engine bay, where it connects to the starter motor. The cable run is inaccessible inside of the body sill panel, and so must be fitted, and secured with its saddle tie wraps, before bonding a new sill panel to the chassis.

The negative battery lead connects via an M8 thread insert to the inboard side of the chassis rail at the bottom LH side of the heater/battery well, on both right and left hand drive cars.

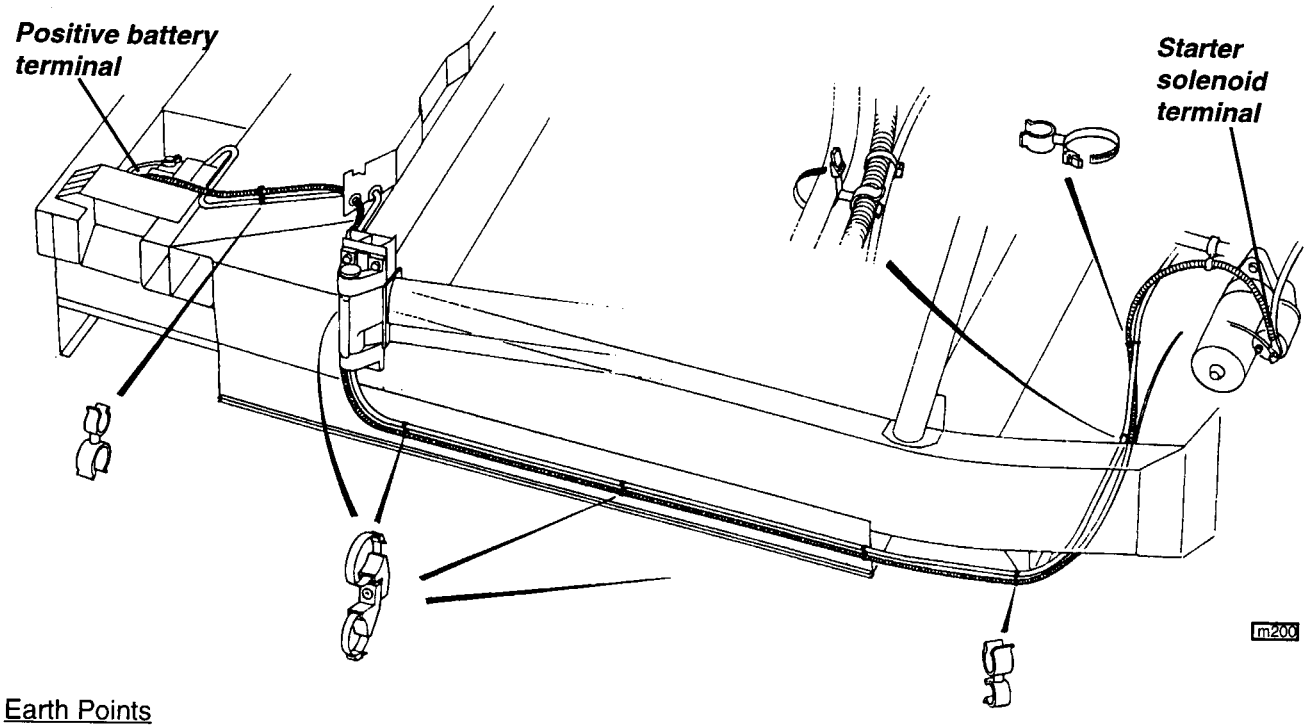

Earth Points

There are only two earth connections to the chassis, one at the front for the battery earth lead, and one at the left hand side of the engine bay for the engine earth braid, and rear harness earthing requirements. At both points, the anodised surface treatment must be removed from the chassis before an M8 Pulsert is fitted, with a special stepped washer being used to clamp directly against the chassis surface. After assembly, coat the chassis and cable terminals with petroleum jelly to protect from corrosion.

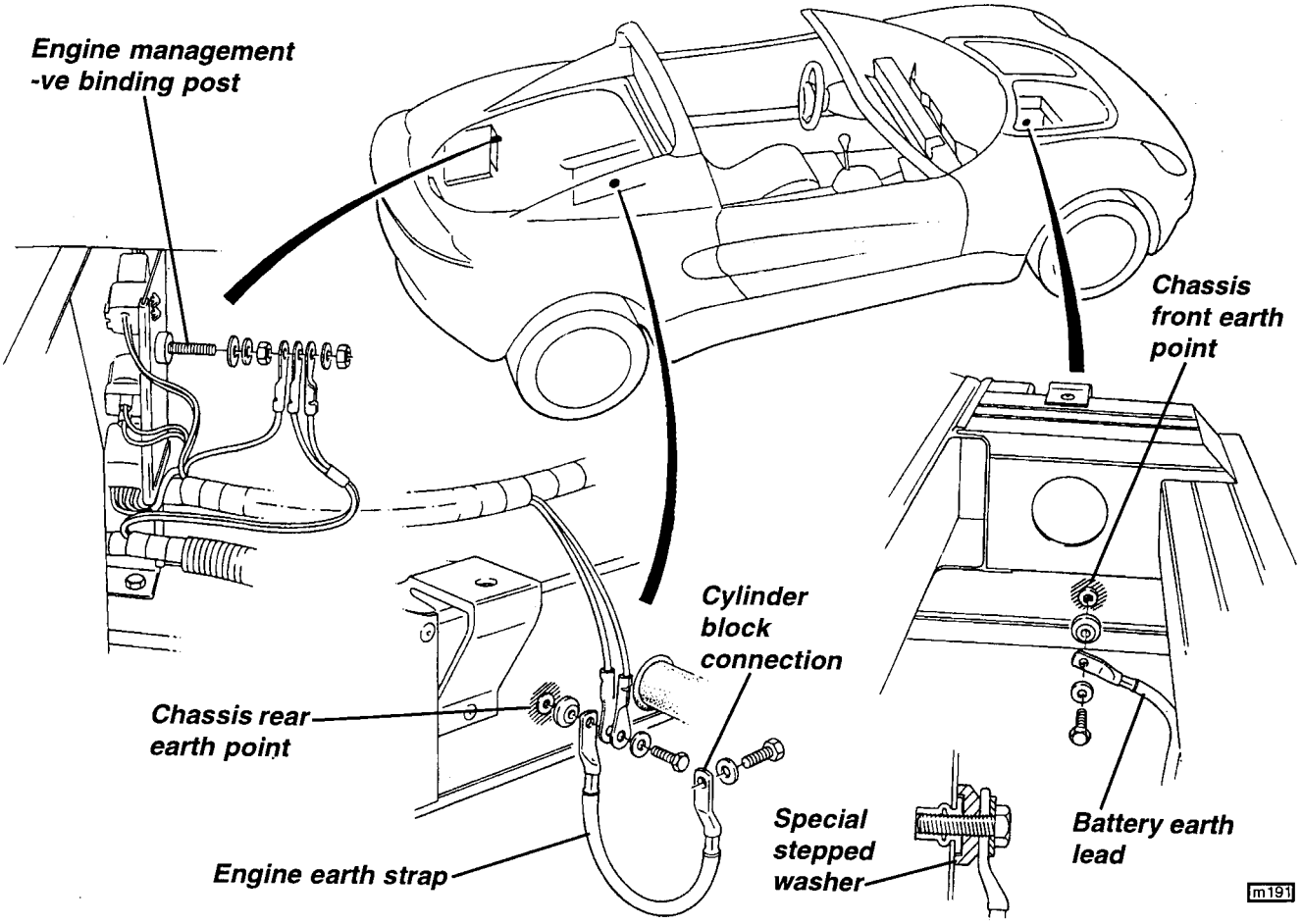

The engine management earth cables are gathered at a insulated binding post at the front of the ECM mounting panel, with an earth cable connecting this post to the chassis earth point. This arrangement is used to reduce the risk of earth paths being created through the ECM casing.

MN.7 - WIPER MECHANISM

The windscreen wiper mechanism comprises a uni-directional motor with an external rotary link, a connecting rod, and a pair of actuating links which join the connecting rod to the arms of the wiper spindle. This mechanism provides the wiper with a motion which is slowed at each end of its travel in order to ease the inertia loads during direction changes, to the benefit of refinement and durability. The motor and wheelbox are mounted on a single fabricated steel bracket which is bolted to the windscreen scuttle panel.

To remove the wiper mechanism:

1. Release the front bonnet latch mechanism from the plinth integral with the motor/wheelbox mounting bracket, and disconnect the washer tubing.

2. Remove the wiper motor protective cover by releasing the two screws into the windscreen buttress, and the patch of adhesive between the inboard end and the screen gutter. Disconnect the harness plug from the motor.

3. Remove the wiper arm from the spindle, and the spindle rubber surround.

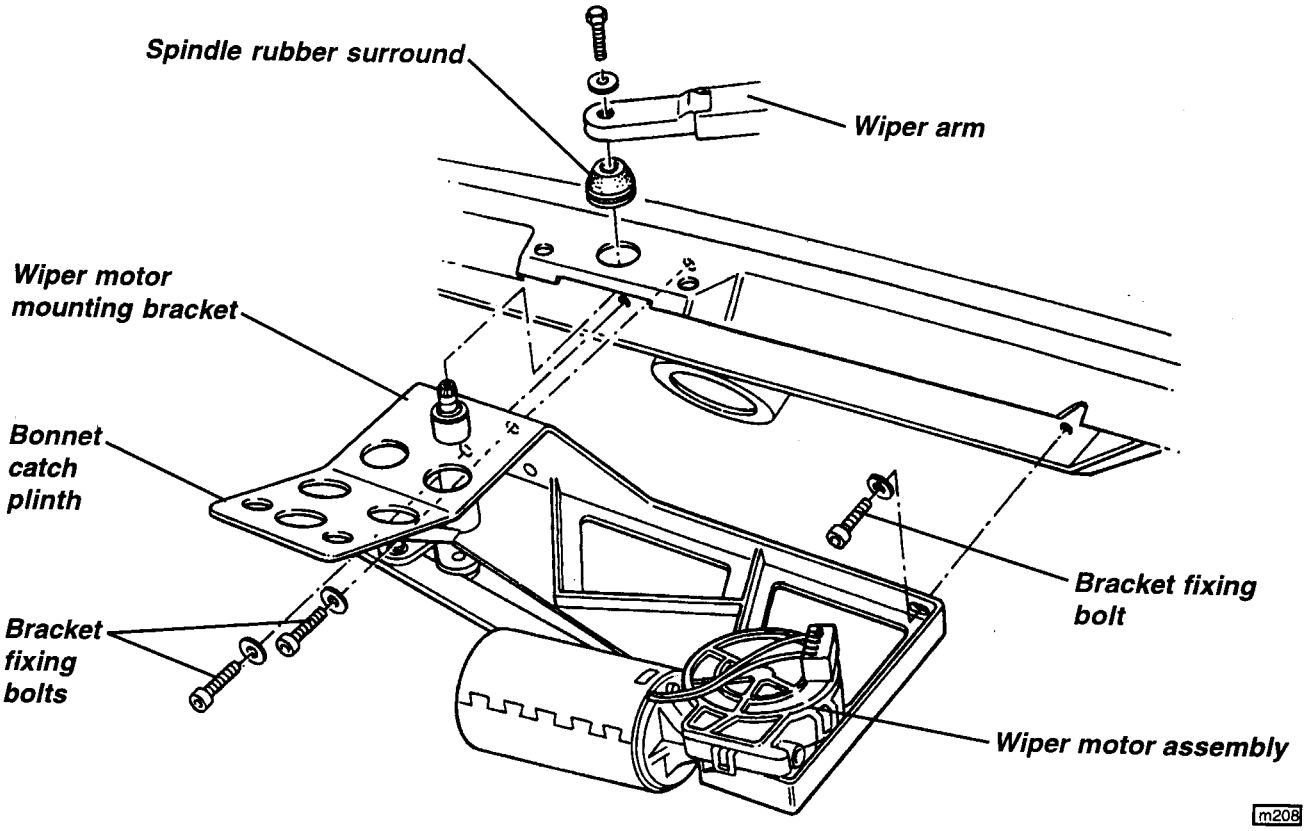

4. Release the three screws securing the motor mounting bracket to the windscreen frame - one at each side of the spindle, one at the motor end, and withdraw the complete mechanism from the car.

5. If the motor is separated from the mechanism, the position of the rotary link should be marked against the motor shaft for reference when re-fitting. The motor should be in the 'park' position before fitting, and the mechanism at full travel so that the rotary link and connecting rod are aligned in the fully extended position.

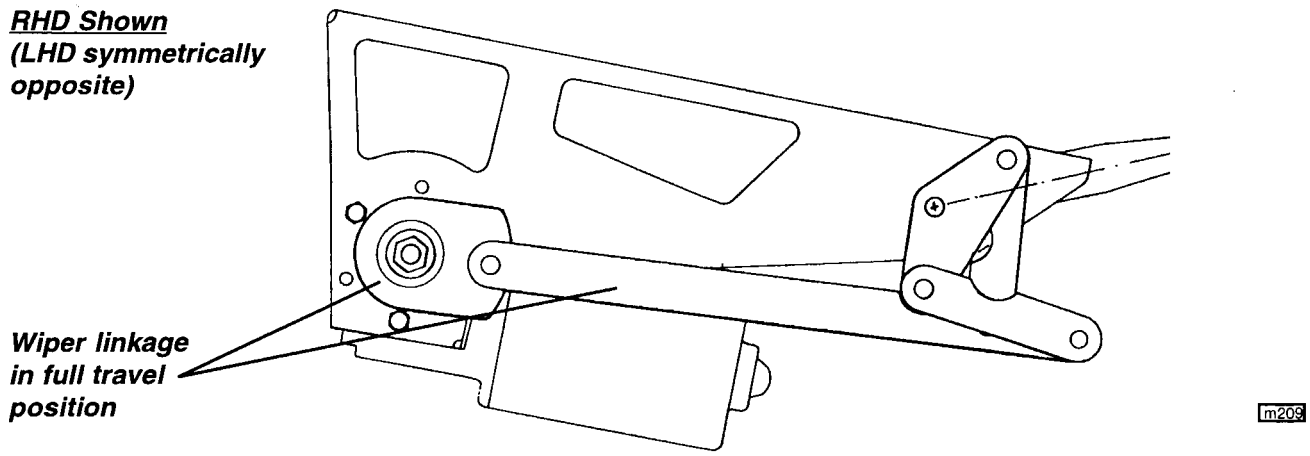

6. Re-assemble in the reverse order to removal, torque tightening the bracket bolts to 20 Nm.

MN.8 - FITMENT OF DRIVING LAMPS

The optional driving lamps mounted in the air intake aperture provide additional lighting on main beam, operating in conjunction with the main headlamps. All cars are built with a wiring harness which accommodates the driving lamps, which may therefore be retro-fitted on any car if the air intake grille is also replaced.

Parts Required

Description	*Part Number*	*Qty*
Driving Lamp	A111M6008F	2
Air Intake Grille	B111B0059F	1
Mounting Plate, LH	A111B0051F	1
Mounting Plate, RH	A111B0050F	1
Pulsert, M8, mounting plate fixing	A075W6155F	6
Plastic Screw, M8 x 25, plate fixing	A082W6530F	6
Washer, plate fixing	A111W4156F	6
Plastic Screw, M8 x 40, lamp to plate	A082W6531F	6
Spring, lamp to plate	A111B6004F	6
Grommet, lamp harness	A075U6043Z	2

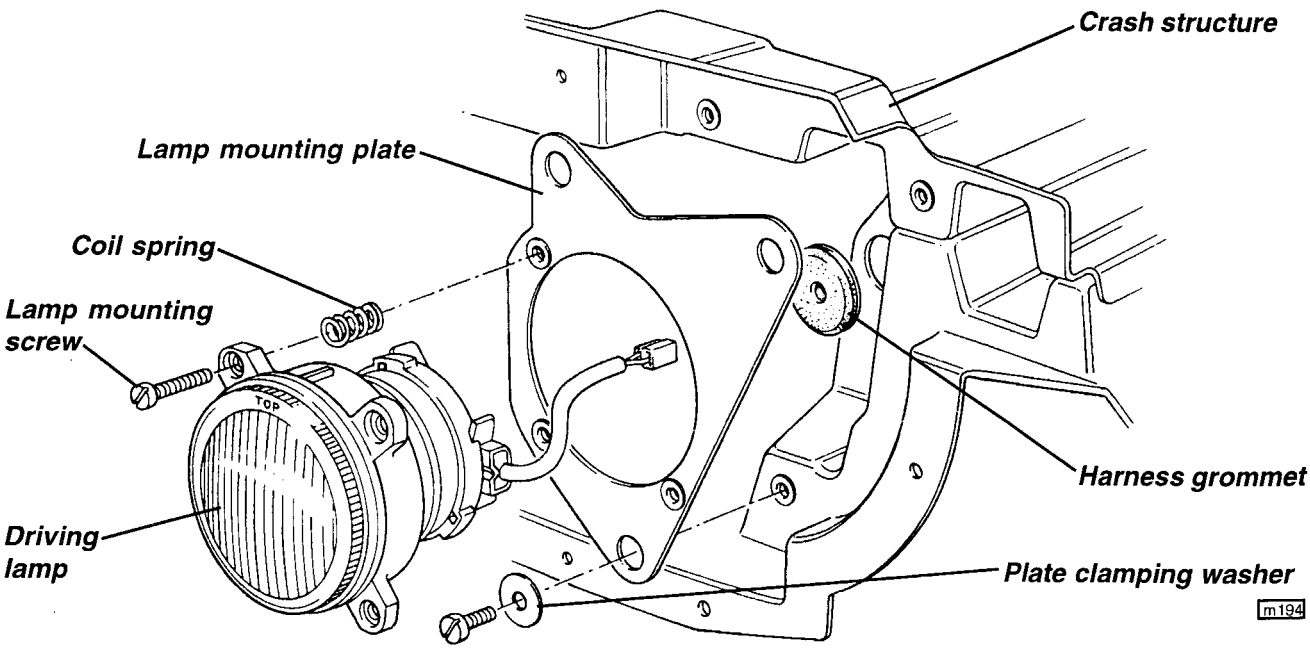

1. Remove the front clamshell and remove the air intake grille from the crash structure together with two of the 'Scrivet' threaded fixings. Transfer these to the top of the clamshell intake aperture (pre-drilled holes).

2. Fit the M8 Pulserts for the mounting plates into the pre-drilled holes in the crash structure and attach the mounting plates.

3. Fit the driving lamps to the mounting plates using the M8 x 40 plastic screws and compression springs. Release the tied back harness, and route through the crash structure, using new grommets, and connect to the lamps, protecting the connector plugs with silicone grease or petroleum jelly.

4. Fit the new grille to the clamshell and refit the clamshell.

MN.9 - HARNESS ROUTING

The main harness runs from the main fusebox/relay station at the passenger side of the front services compartment, forwards across the front of the chassis well to feed the heater motor, horn and driving lamps, and rearwards through the scuttle where it divides into branches running a) through the scuttle beam and across the dash top for the instrument pack and switchgear, and b) along the cockpit centre tunnel to the rear of the car. At the rear of the tunnel the harness passes through the fuel tank bay to emerge at the left hand front of the engine bay from where it runs to the LH side panel to feed the engine and rear harnesses, then across the rear of the chassis to the fog and reversing lamps. An additional branch is routed across the top of the cabin rear bulkhead to feed the two speakers.

A front harness is fixed to the clamshell to feed the headlamps, turn and repeater lamps, and plugs into the main harness at the RH side. Similarly, a rear harness is fitted to the rear clamshell to supply the rear lamps, with a connector on the LH side panel.

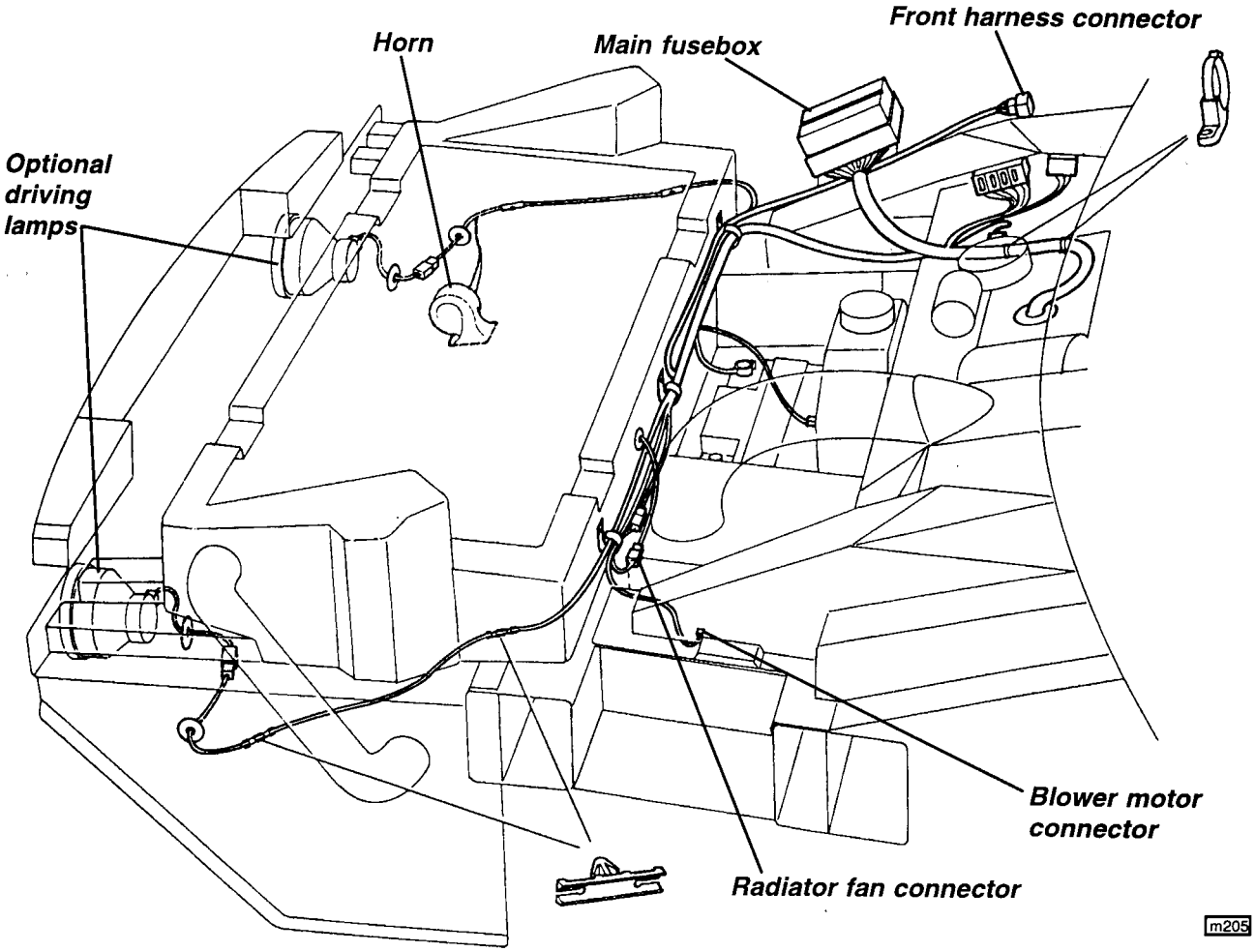

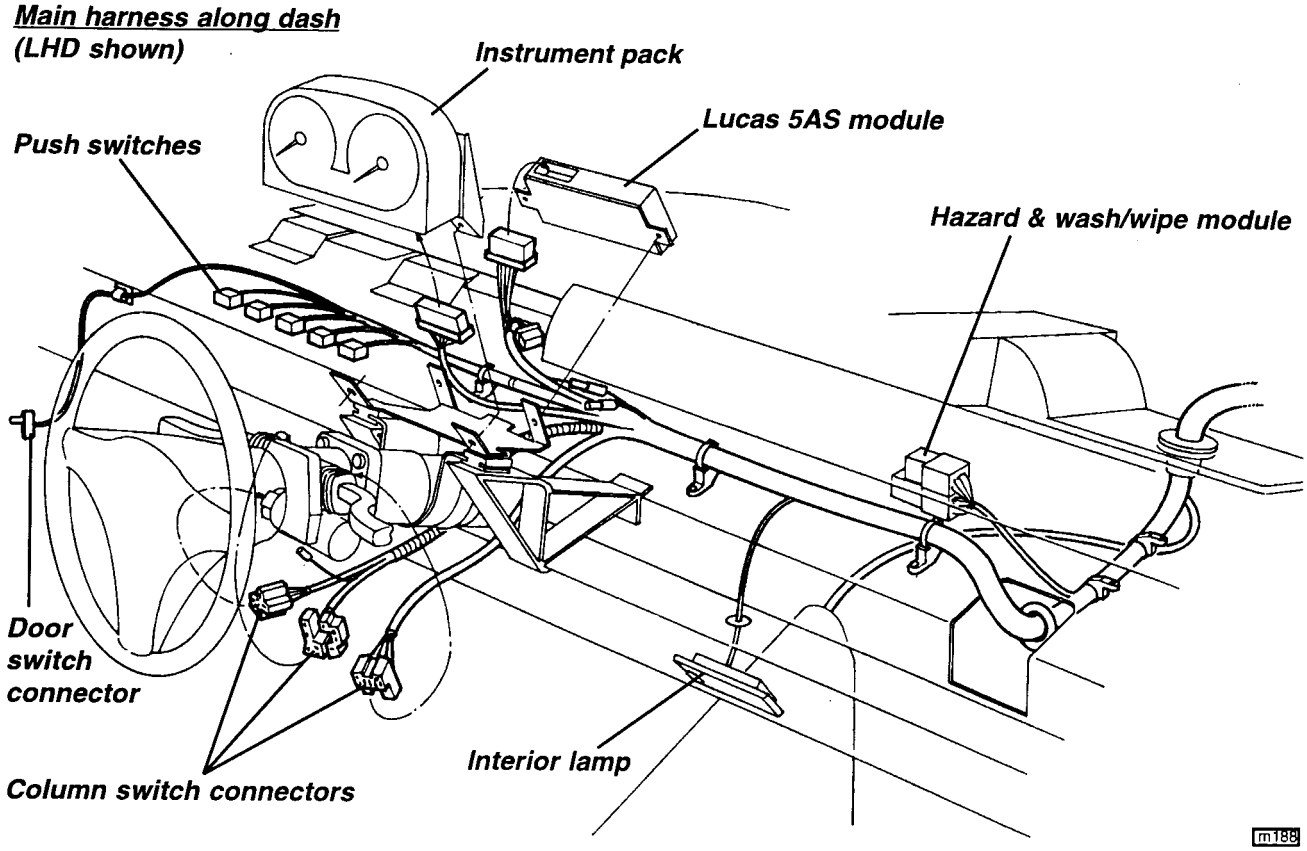
Main harness along dash
(LHD shown)
Instrument pack
Lucas 5AS module
Push switches
Hazard & wash/wipe module
Door switch connector
Interior lamp
Column switch connectors
m188

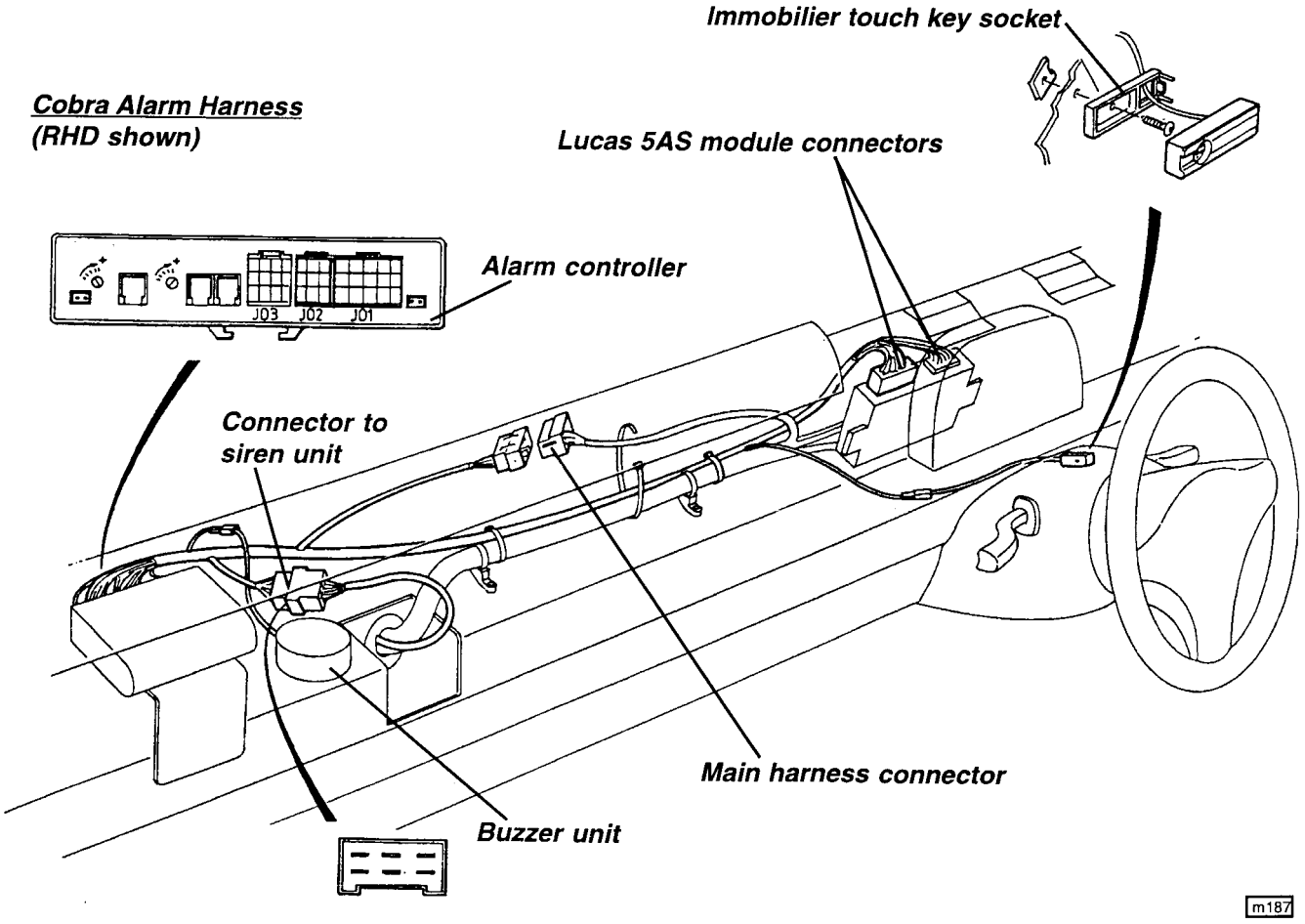
Immobilier touch key socket
Cobra Alarm Harness
(RHD shown)
Lucas 5AS module connectors
Alarm controller
J03 J02 J01
Connector to siren unit
Main harness connector
Buzzer unit
m187

Main harness into engine bay

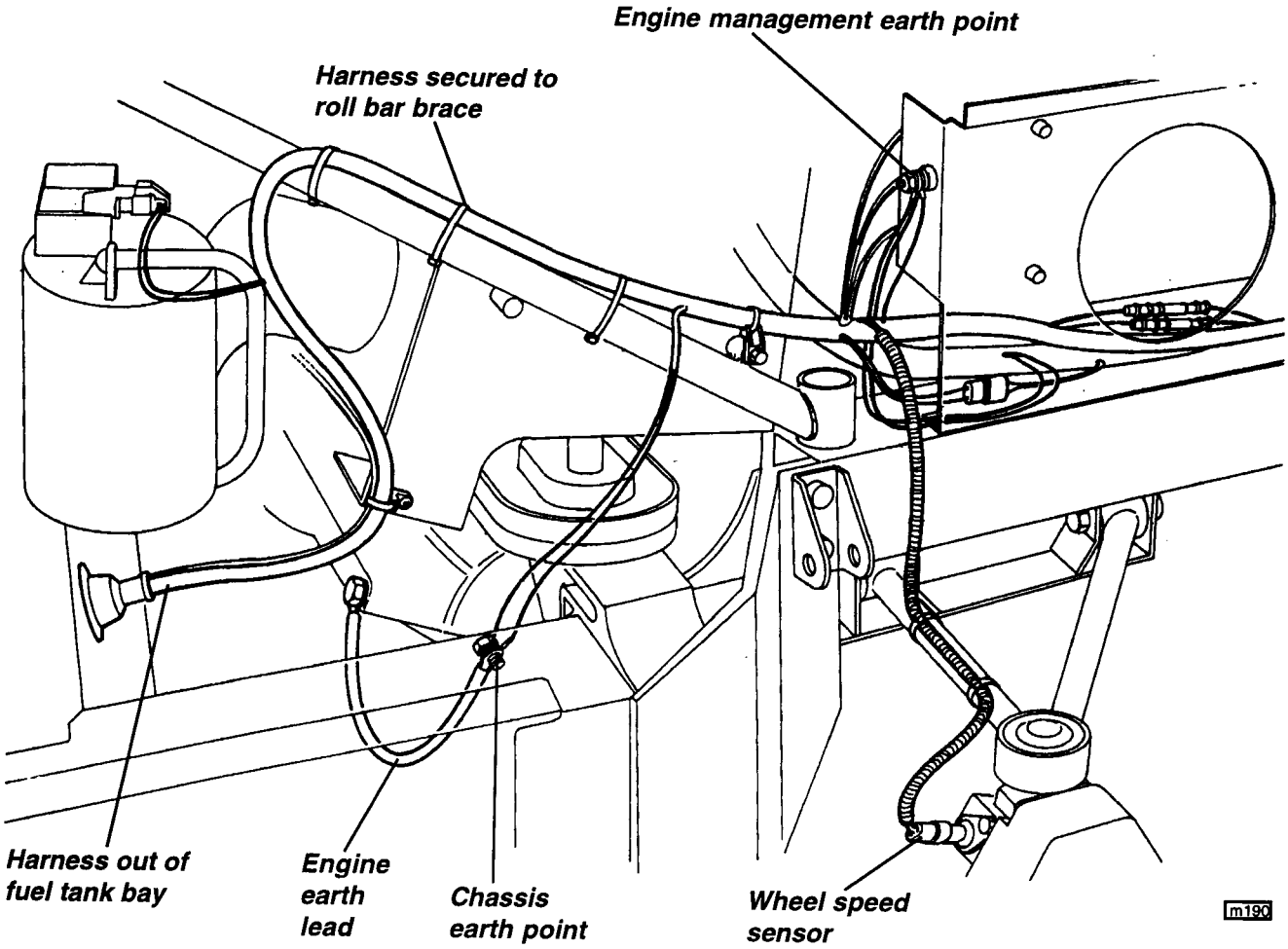

Main harness at ECM panel

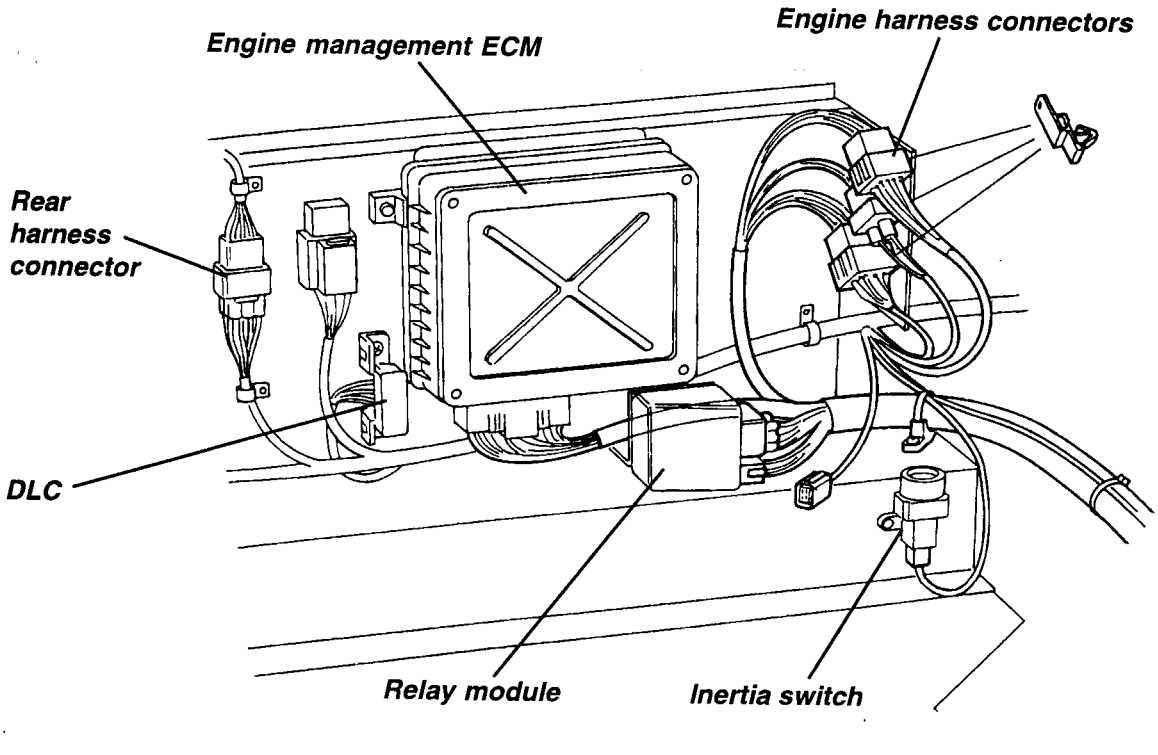

Rear clamshell harness

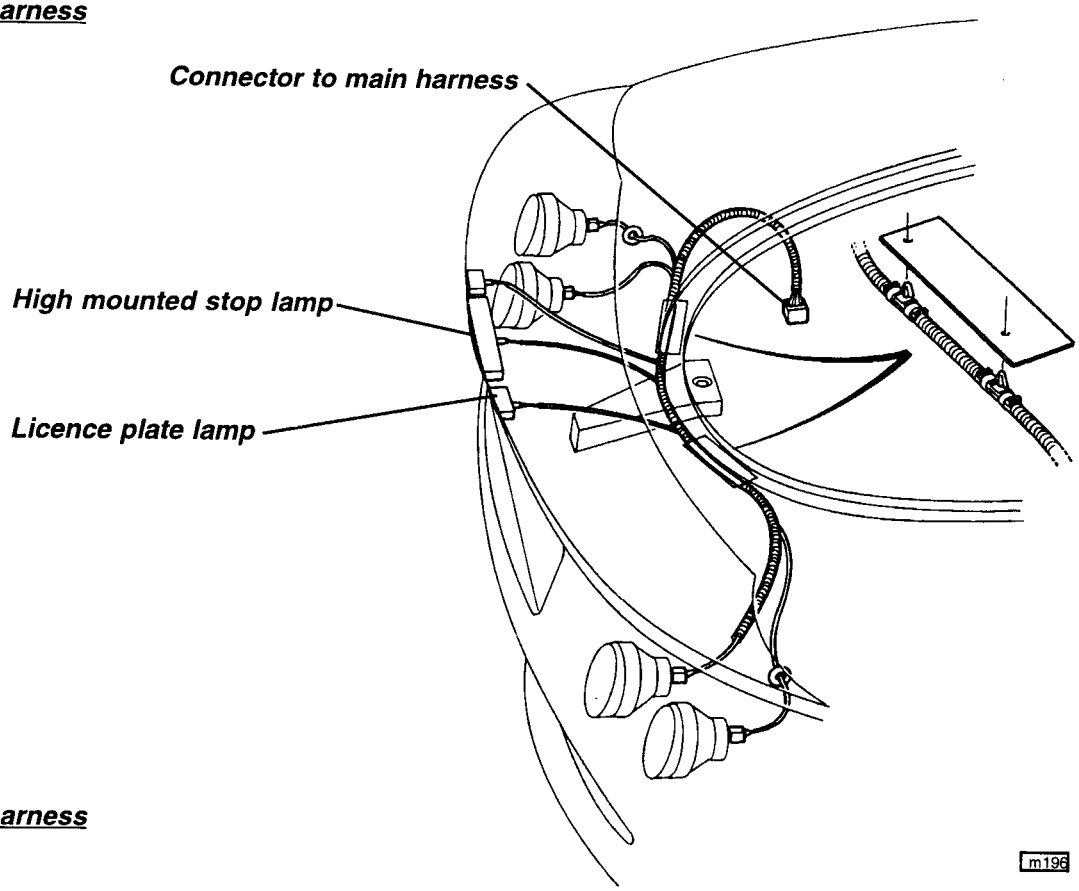

Front clamshell harness

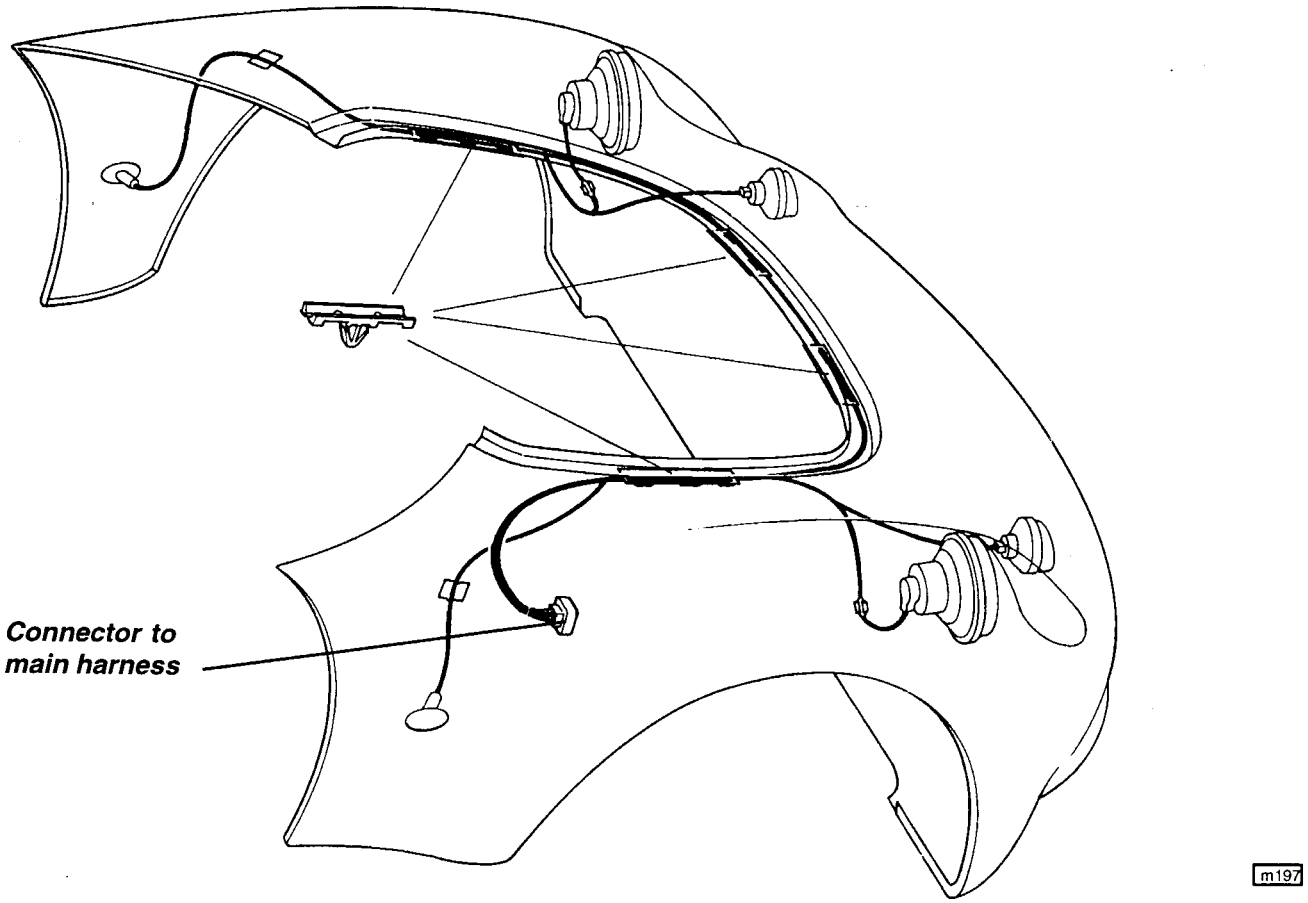

Centre tunnel harness routing

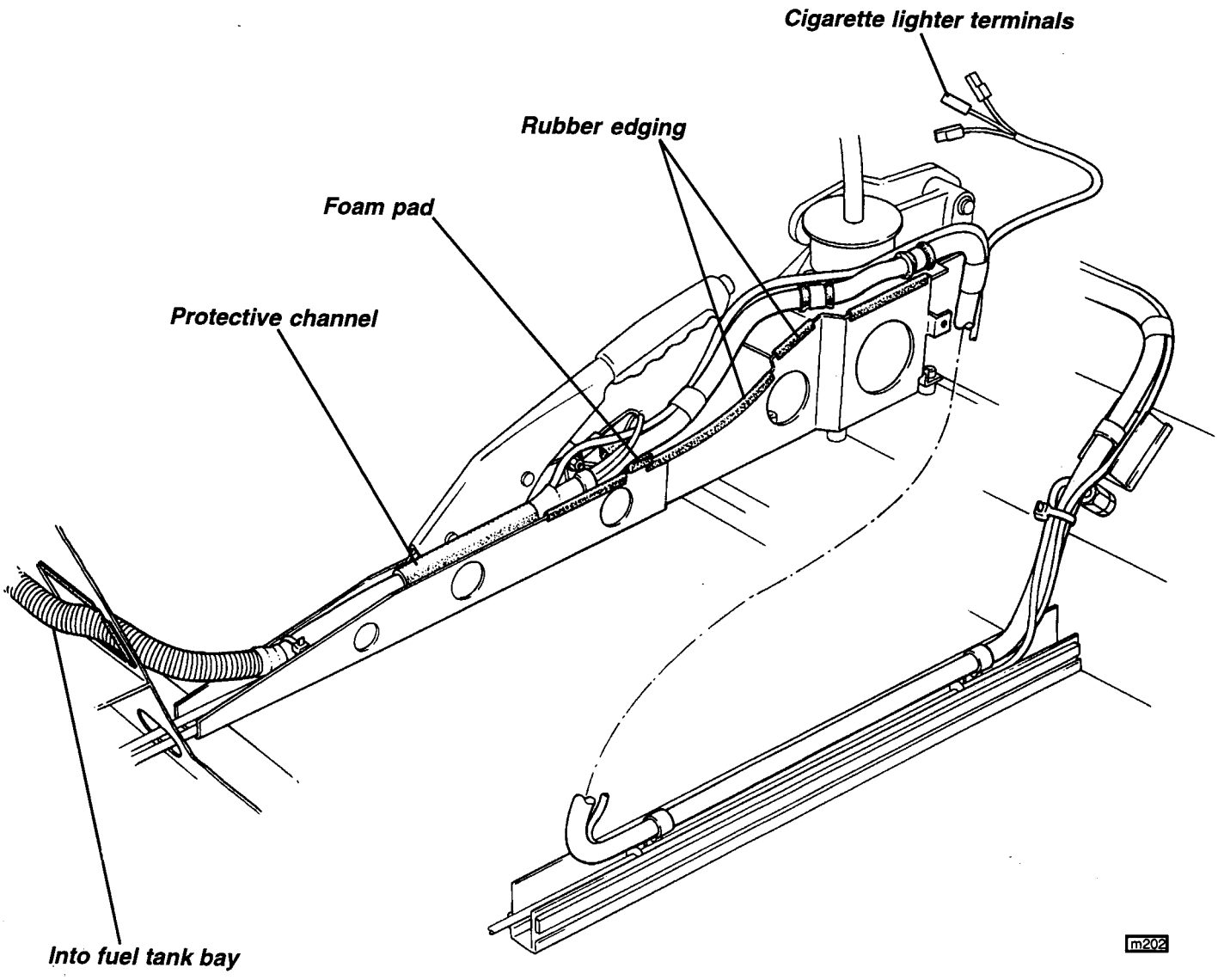

Note use of 'P' clips, tie wraps and edge protection as shown

MN.10 - INTRODUCTION OF UPRATED STARTER MOTOR

In February '97, the starter motor was uprated from 1.0 kW to 1.4 kW, with attendent benefits to hot start performance. In order to optimise the vehicle wiring harness in respect to voltage drop characteristics, the power supply to the engine management system was revised and the main engine management 'Maxi' fuse relocated from the rear luggage compartment to the front services compartment.

Updating an earlier wiring harness is not practical, and starter motor replacement should be carried out on a like for like basis. Fitting a 1.4 kW motor on an earlier car may result in sufficient voltage drop to the engine management system to prevent starting.

Change Point

The 1.4 kW starter motor was introduced at the following change point (approx):

VIN V 685 (February '97)
Note that a label on the motor body identifies the type.

Fuse Location

LH side of rear luggage compartment

Early cars (1.0 kW motor) engine management 40A Maxi fuse
On later cars, the fuse holder is still fitted, but without a fuse.

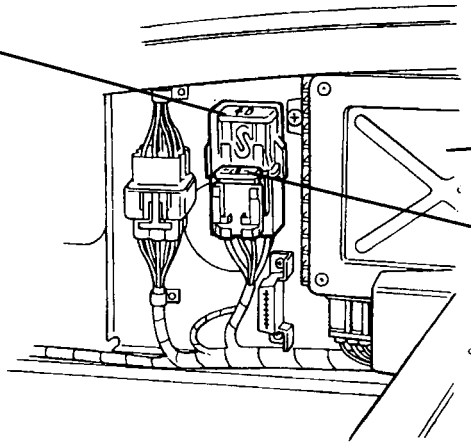

ECM

Fuel pump fuse

Front services compartment
(RHD shown)

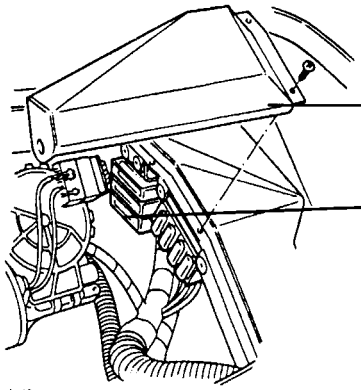

Wiper motor cover

Later cars (1.4 kW motor) engine management 40A Maxi fuse.
On LHD cars, the other fuses shown are sited on the RH side of the compartment, but the engine management fuse remains on the LH side.

MN.11 - CIRCUIT DIAGRAMS - Prior to Oct. '97

Circuit	*Sheet*
Start, Alternator & Ignition	1
Fuel Pump & Cooling Fan	2
Engine Management System	3
Alarm & Immobiliser (Lucas), Interior Lamp & Horn	4
Alarm & Immobiliser (Cobra), Interior Lamp	5
Stop & Reverse Lamps	6
Direction Indicators & Hazard Lamps	7
Headlamps	8
Sidelamps & Fog Lamps	9
Instruments	10
Windscreen Wipers	11
Interior Fan	12
Radio & Cigar Lighter	13
Power & Ground Structure	14
Inter-Harness Connectors	15
Fuses	16

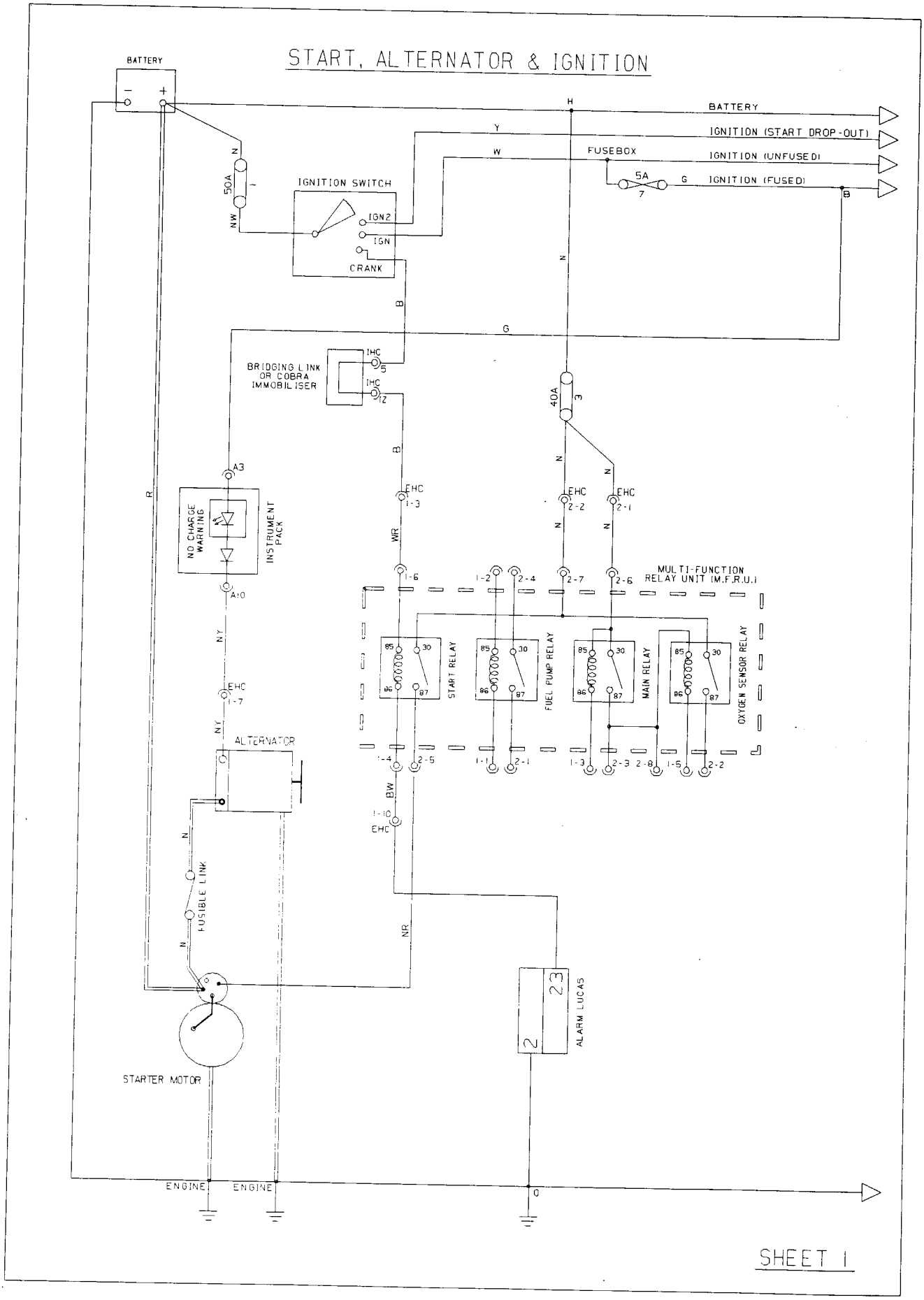
START, ALTERNATOR & IGNITION
BATTERY
BATTERY
IGNITION (START DROP-OUT)
IGNITION (UNFUSED)
IGNITION (FUSED)
FUSEBOX
5A
7
50A
IGNITION SWITCH
IGN2
IGN
CRANK
BRIDGING LINK OR COBRA IMMOBILISER
IHC
40A
3
NO CHARGE WARNING
INSTRUMENT PACK
A3
A:0
EHC
MULTI-FUNCTION RELAY UNIT (M.F.R.U.)
START RELAY
FUEL PUMP RELAY
MAIN RELAY
OXYGEN SENSOR RELAY
ALTERNATOR
FUSIBLE LINK
STARTER MOTOR
ALARM LUCAS
ENGINE
ENGINE
SHEET 1

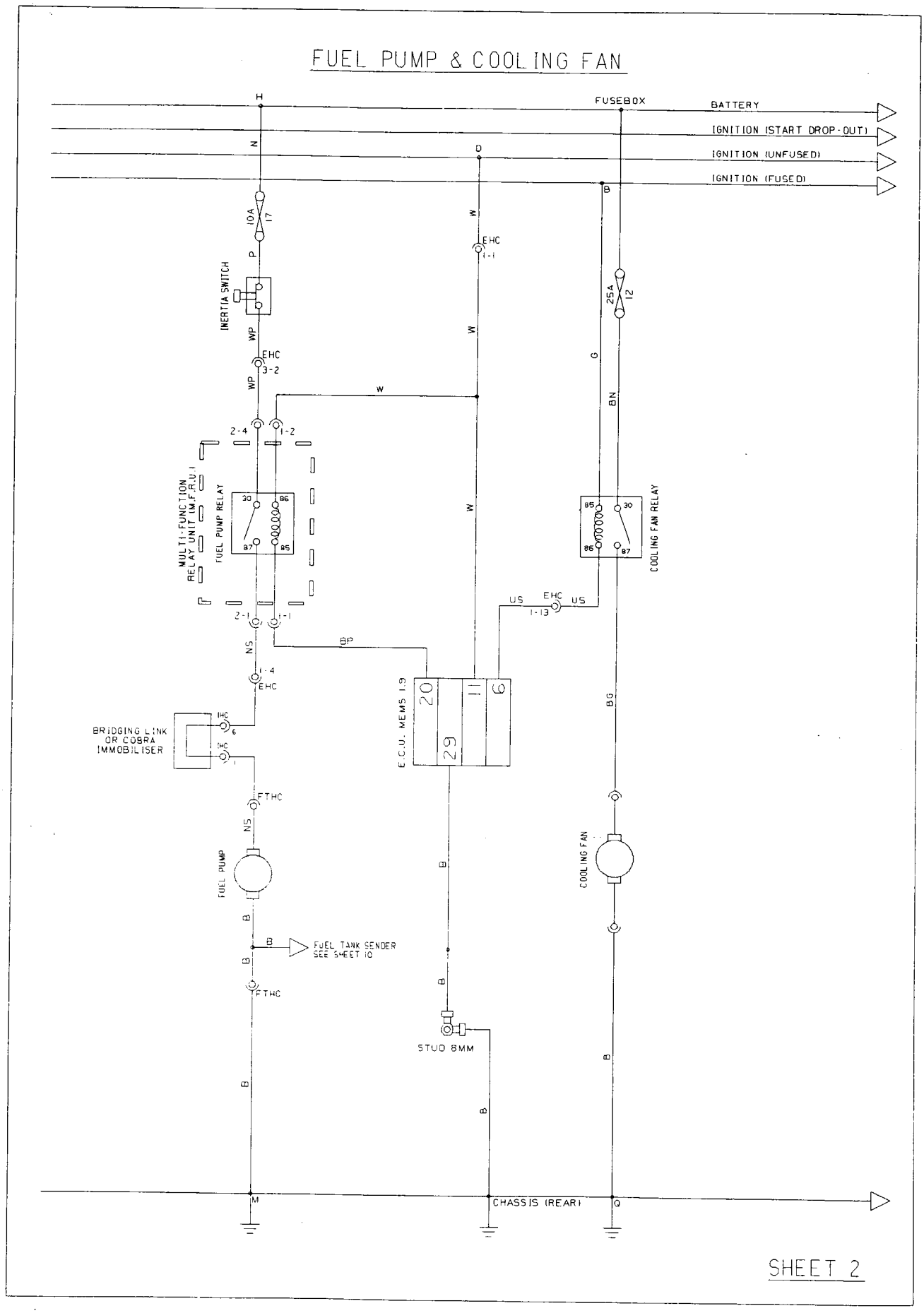
FUEL PUMP & COOLING FAN
FUSEBOX
BATTERY
IGNITION (START DROP-OUT)
IGNITION (UNFUSED)
IGNITION (FUSED)
10A 17
INERTIA SWITCH
EHC 3-2
EHC 1-1
25A 12
MULTI-FUNCTION RELAY UNIT (M.F.R.U.)
FUEL PUMP RELAY
COOLING FAN RELAY
EHC 1-13
BRIDGING LINK OR COBRA IMMOBILISER
E.C.U. MEMS 1.9
FTHC
FUEL PUMP
COOLING FAN
FUEL TANK SENDER SEE SHEET 10
STUD 8MM
CHASSIS (REAR)
SHEET 2

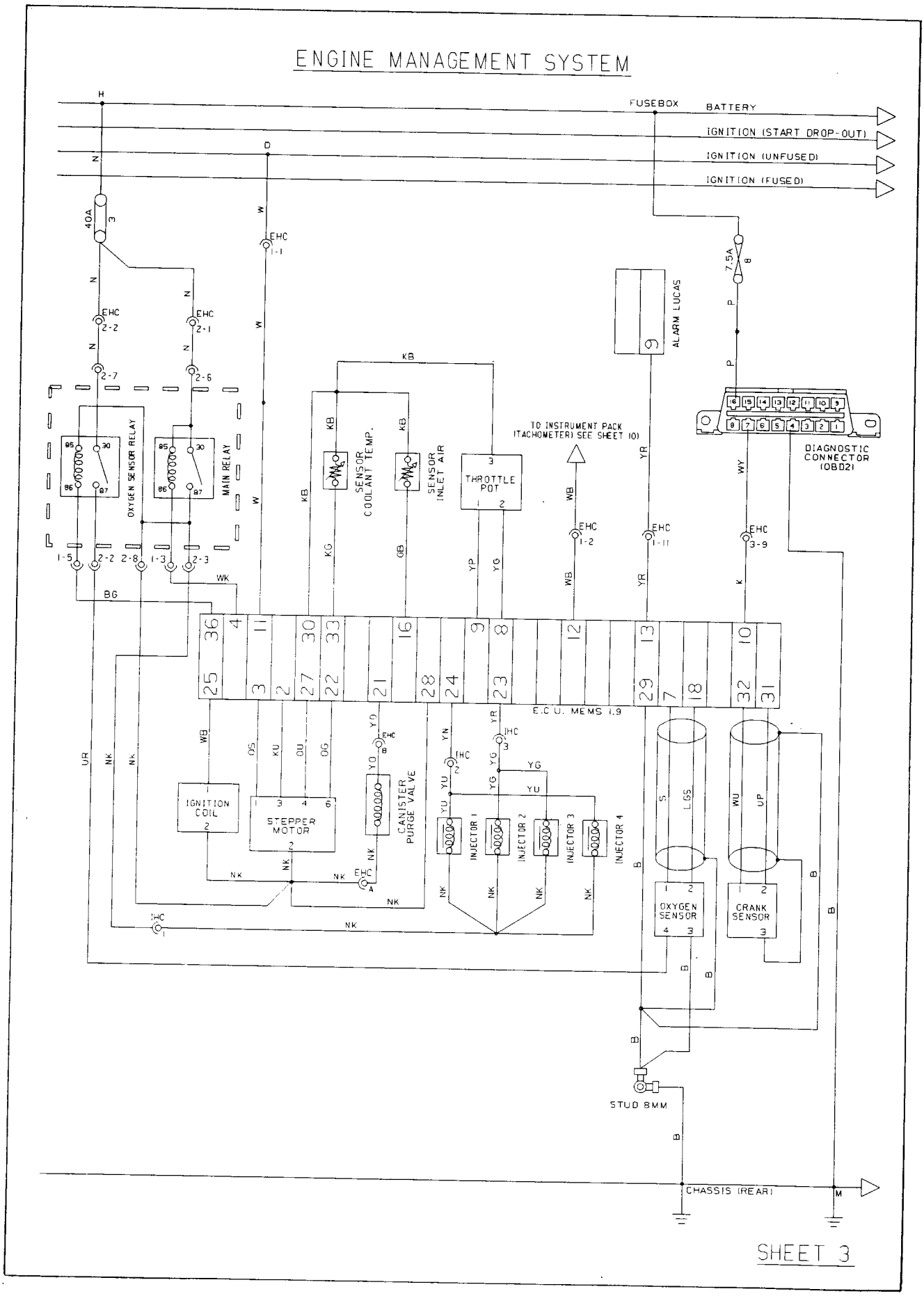
ENGINE MANAGEMENT SYSTEM
FUSEBOX
BATTERY
IGNITION (START DROP-OUT)
IGNITION (UNFUSED)
IGNITION (FUSED)
40A
7.5A
ALARM LUCAS
OXYGEN SENSOR RELAY
MAIN RELAY
SENSOR COOLANT TEMP.
SENSOR INLET AIR
THROTTLE POT
TO INSTRUMENT PACK (TACHOMETER) SEE SHEET 10)
DIAGNOSTIC CONNECTOR (OBD2)
E.C.U. MEMS 1.9
IGNITION COIL
STEPPER MOTOR
CANISTER PURGE VALVE
INJECTOR 1
INJECTOR 2
INJECTOR 3
INJECTOR 4
OXYGEN SENSOR
CRANK SENSOR
STUD 8MM
CHASSIS (REAR)
SHEET 3

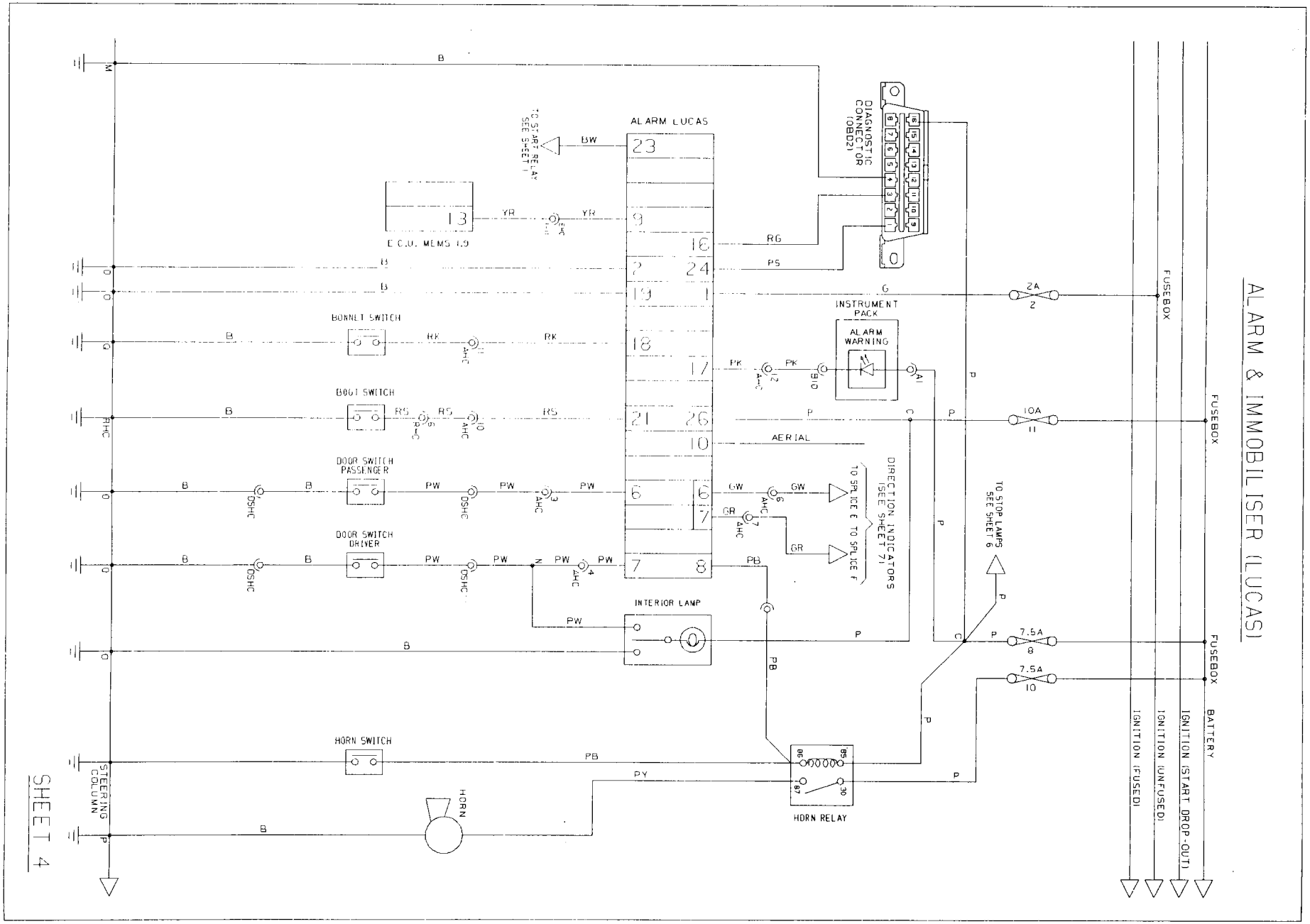
ALARM & IMMOBILISER (LUCAS)
ALARM LUCAS
DIAGNOSTIC CONNECTOR (OBD2)
TO START RELAY SEE SHEET 1
E.C.U. MEMS 1.9
BONNET SWITCH
BOOT SWITCH
DOOR SWITCH PASSENGER
DOOR SWITCH DRIVER
INTERIOR LAMP
HORN SWITCH
HORN
HORN RELAY
STEERING COLUMN
INSTRUMENT PACK
ALARM WARNING
AERIAL
DIRECTION INDICATORS SEE SHEET 7
TO SPLICE E TO SPLICE F
TO STOP LAMPS SEE SHEET 6
FUSEBOX
BATTERY
IGNITION (FUSED)
IGNITION (UNFUSED)
IGNITION (START DROP-OUT)
2A
10A
7.5A
SHEET 4

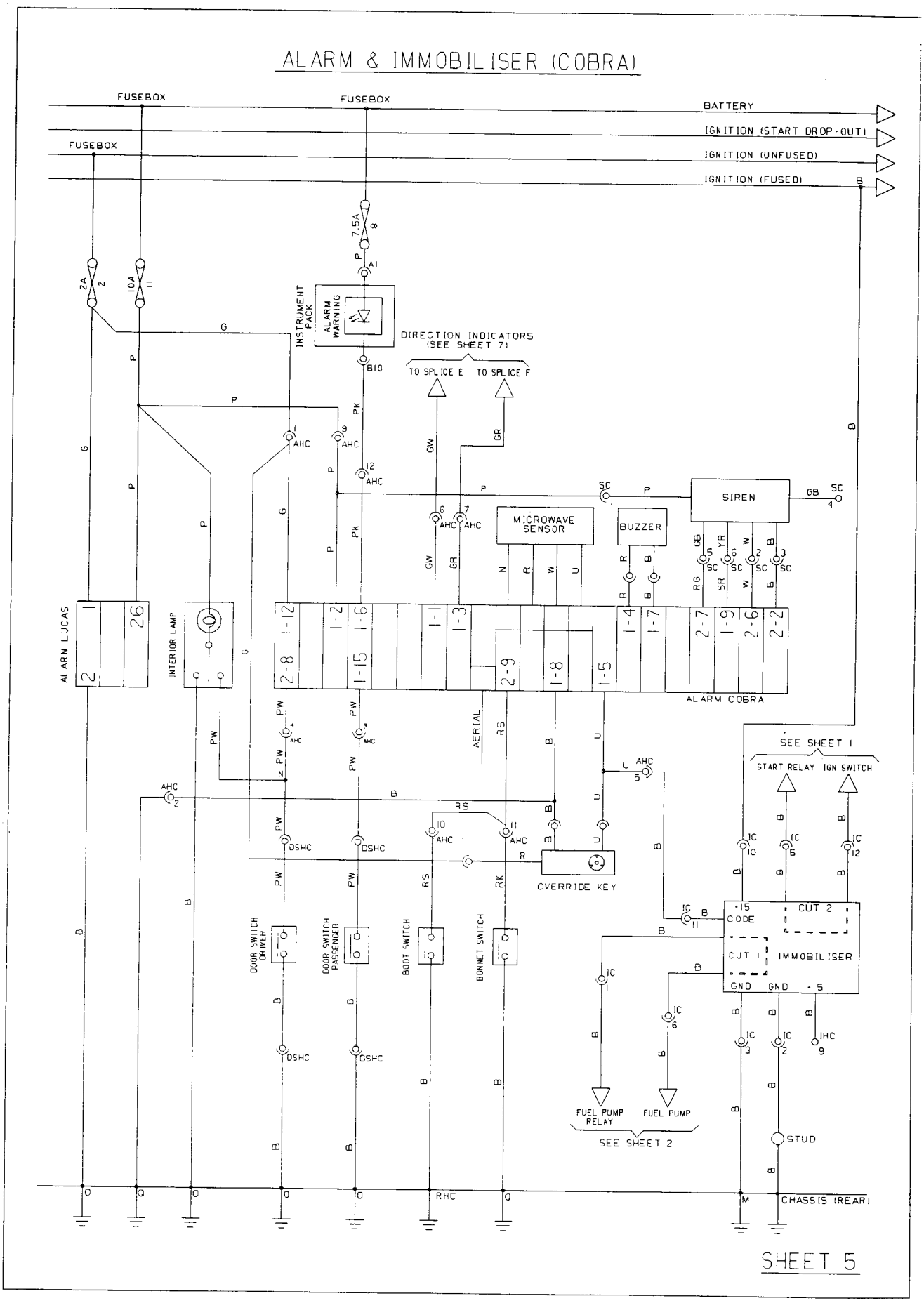
ALARM & IMMOBILISER (COBRA)
FUSEBOX
FUSEBOX
FUSEBOX
BATTERY
IGNITION (START DROP-OUT)
IGNITION (UNFUSED)
IGNITION (FUSED)
7.5A
8
2A
2
10A
11
INSTRUMENT PACK
ALARM WARNING
DIRECTION INDICATORS (SEE SHEET 7)
TO SPLICE E
TO SPLICE F
SIREN
MICROWAVE SENSOR
BUZZER
ALARM LUCAS
INTERIOR LAMP
ALARM COBRA
AERIAL
SEE SHEET 1
START RELAY
IGN SWITCH
OVERRIDE KEY
DOOR SWITCH DRIVER
DOOR SWITCH PASSENGER
BOOT SWITCH
BONNET SWITCH
CODE
CUT 2
CUT 1
IMMOBILISER
GND
GND
FUEL PUMP RELAY
FUEL PUMP
SEE SHEET 2
STUD
CHASSIS (REAR)
SHEET 5

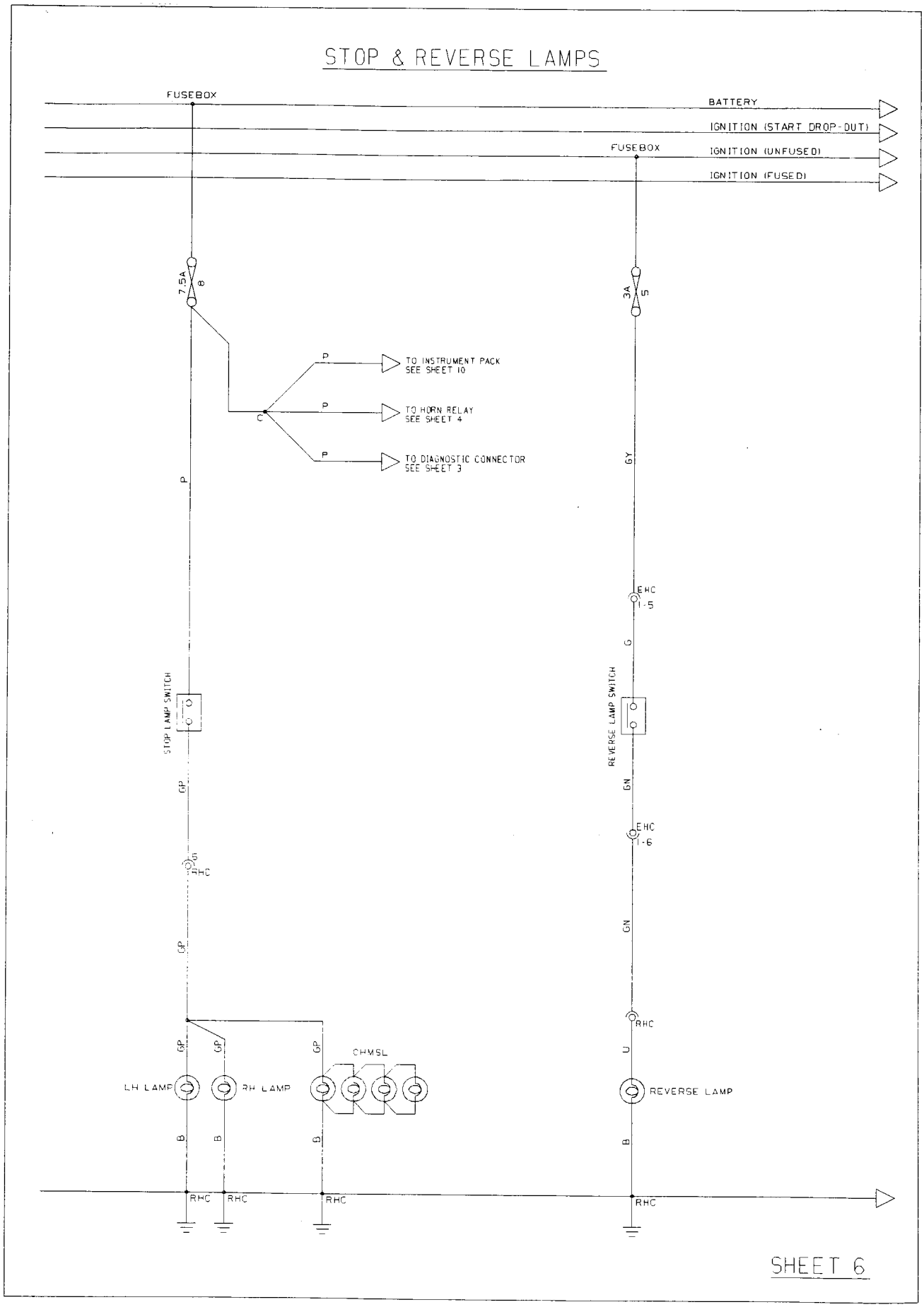
STOP & REVERSE LAMPS
FUSEBOX
BATTERY
IGNITION (START DROP-OUT)
FUSEBOX
IGNITION (UNFUSED)
IGNITION (FUSED)
7.5A
8
3A
5
P
TO INSTRUMENT PACK
SEE SHEET 10
P
TO HORN RELAY
SEE SHEET 4
C
P
TO DIAGNOSTIC CONNECTOR
SEE SHEET 3
P
GY
EHC
1-5
G
STOP LAMP SWITCH
REVERSE LAMP SWITCH
GP
GN
EHC
1-6
RHC
GP
GN
RHC
GP
GP
GP
CHMSL
U
LH LAMP
RH LAMP
REVERSE LAMP
B
B
B
B
RHC
RHC
RHC
RHC
SHEET 6

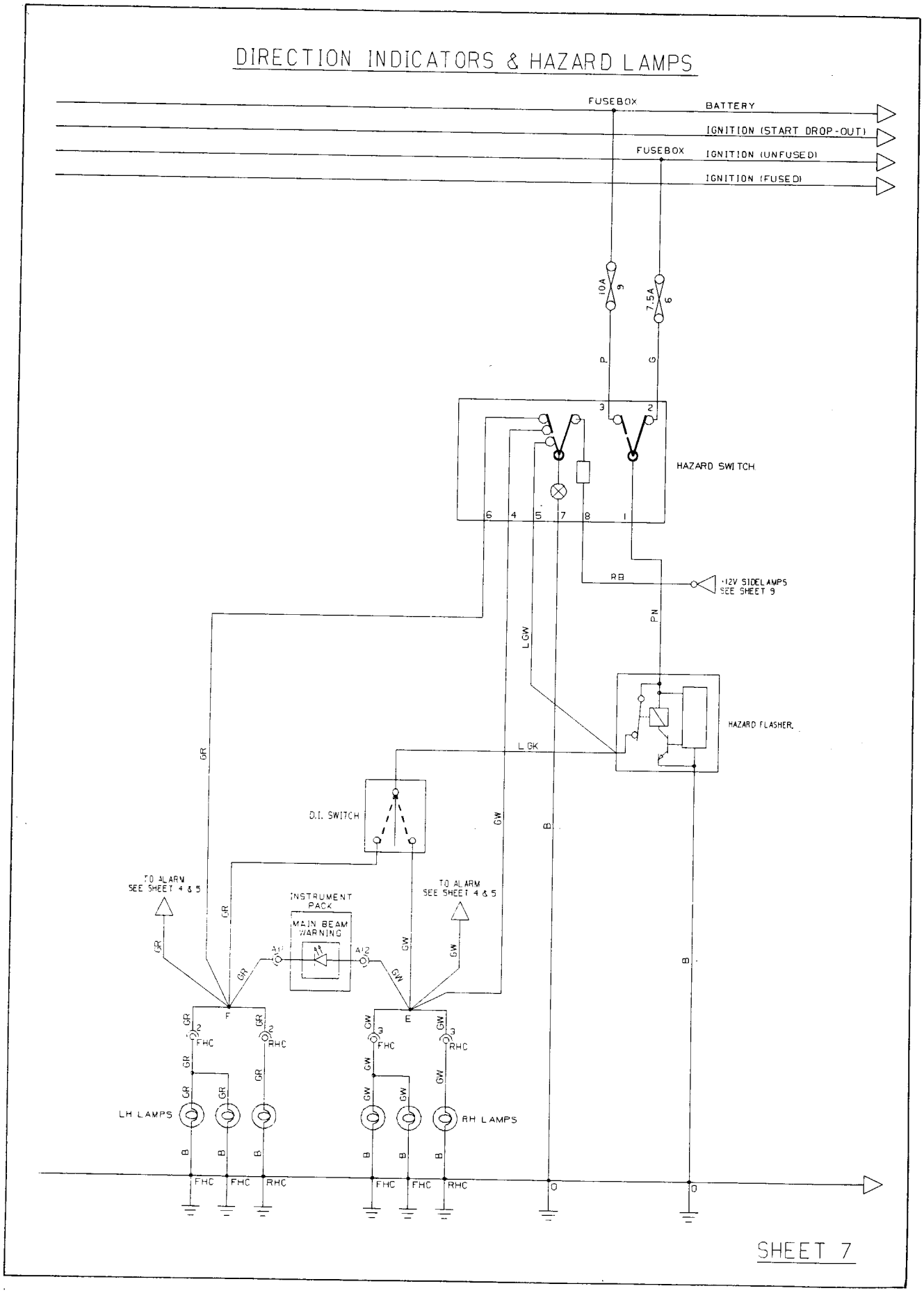
DIRECTION INDICATORS & HAZARD LAMPS
FUSEBOX
BATTERY
IGNITION (START DROP-OUT)
FUSEBOX
IGNITION (UNFUSED)
IGNITION (FUSED)
10A
7.5A
P
G
HAZARD SWITCH
RB
12V SIDELAMPS SEE SHEET 9
PN
LGW
HAZARD FLASHER
LGK
GR
D.I. SWITCH
GW
B
TO ALARM SEE SHEET 4 & 5
INSTRUMENT PACK
MAIN BEAM WARNING
TO ALARM SEE SHEET 4 & 5
F
E
FHC
RHC
LH LAMPS
RH LAMPS
SHEET 7

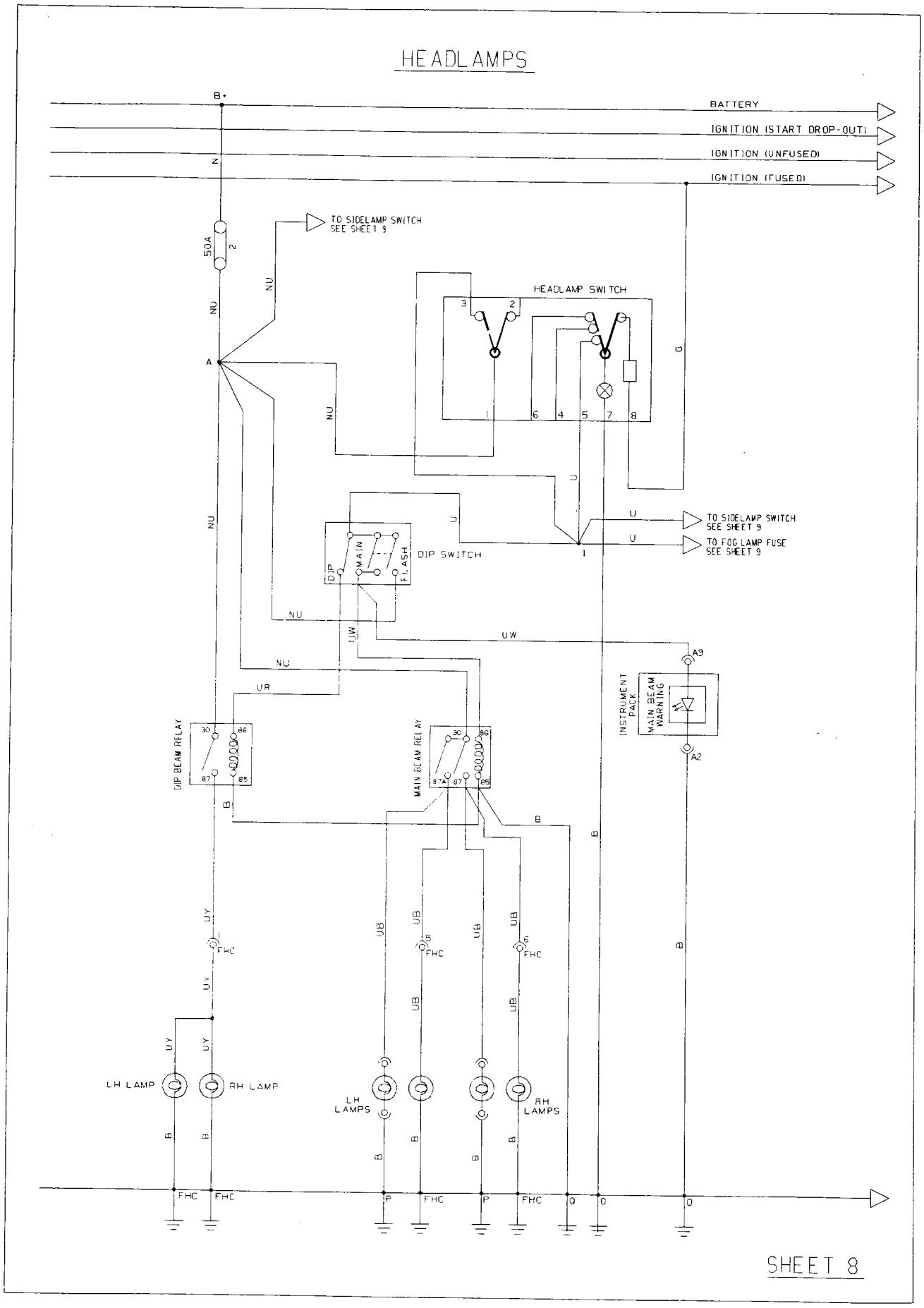
HEADLAMPS
B+
BATTERY
IGNITION (START DROP-OUT)
IGNITION (UNFUSED)
IGNITION (FUSED)
TO SIDELAMP SWITCH SEE SHEET 9
50A
2
NU
A
HEADLAMP SWITCH
3
2
1
6
4
5
7
8
G
U
TO SIDELAMP SWITCH SEE SHEET 9
TO FOG LAMP FUSE SEE SHEET 9
DIP SWITCH
DIP
MAIN
FLASH
UW
A9
A2
INSTRUMENT PACK
MAIN BEAM WARNING
DIP BEAM RELAY
MAIN BEAM RELAY
30
86
87
85
87A
UR
B
UY
UB
FHC
LH LAMP
RH LAMP
LH LAMPS
RH LAMPS
P
O
SHEET 8

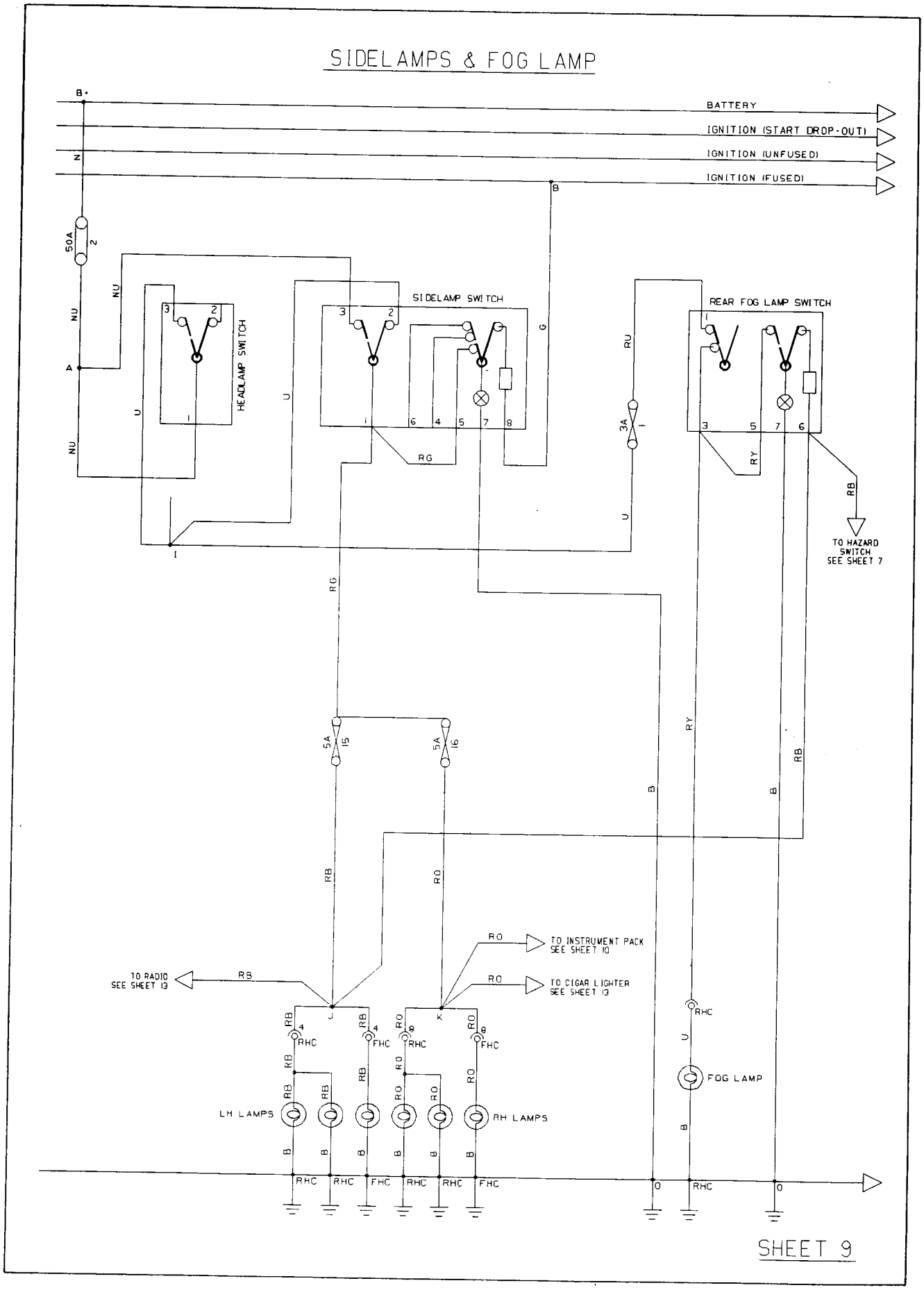
SIDELAMPS & FOG LAMP
B+
BATTERY
IGNITION (START DROP-OUT)
IGNITION (UNFUSED)
IGNITION (FUSED)
50A
HEADLAMP SWITCH
SIDELAMP SWITCH
REAR FOG LAMP SWITCH
3A
TO HAZARD SWITCH SEE SHEET 7
5A 15
5A 16
TO INSTRUMENT PACK SEE SHEET 10
TO RADIO SEE SHEET 13
TO CIGAR LIGHTER SEE SHEET 13
LH LAMPS
RH LAMPS
FOG LAMP
SHEET 9

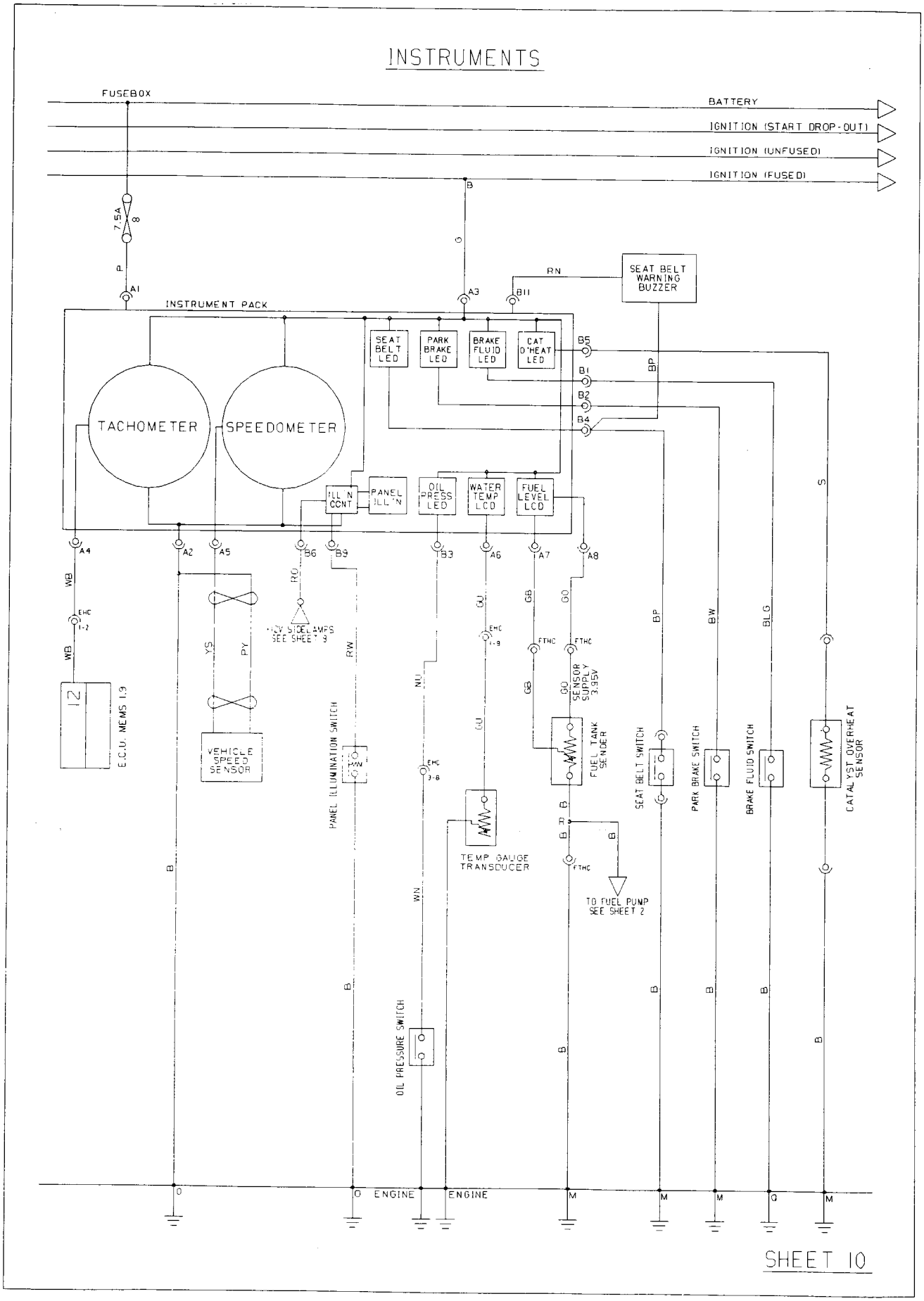
INSTRUMENTS
FUSEBOX
BATTERY
IGNITION (START DROP-OUT)
IGNITION (UNFUSED)
IGNITION (FUSED)
7.5A
8
SEAT BELT WARNING BUZZER
INSTRUMENT PACK
SEAT BELT LED
PARK BRAKE LED
BRAKE FLUID LED
CAT O'HEAT LED
TACHOMETER
SPEEDOMETER
ILL'N CONT
PANEL ILL'N
OIL PRESS LED
WATER TEMP LCD
FUEL LEVEL LCD
HOV SIDELAMPS SEE SHEET 3
E.C.U. MEMS 1.9
VEHICLE SPEED SENSOR
PANEL ILLUMINATION SWITCH
OIL PRESSURE SWITCH
TEMP GAUGE TRANSDUCER
SENSOR SUPPLY 3.35V
FUEL TANK SENDER
TO FUEL PUMP SEE SHEET 2
SEAT BELT SWITCH
PARK BRAKE SWITCH
BRAKE FLUID SWITCH
CATALYST OVERHEAT SENSOR
ENGINE
ENGINE
SHEET 10

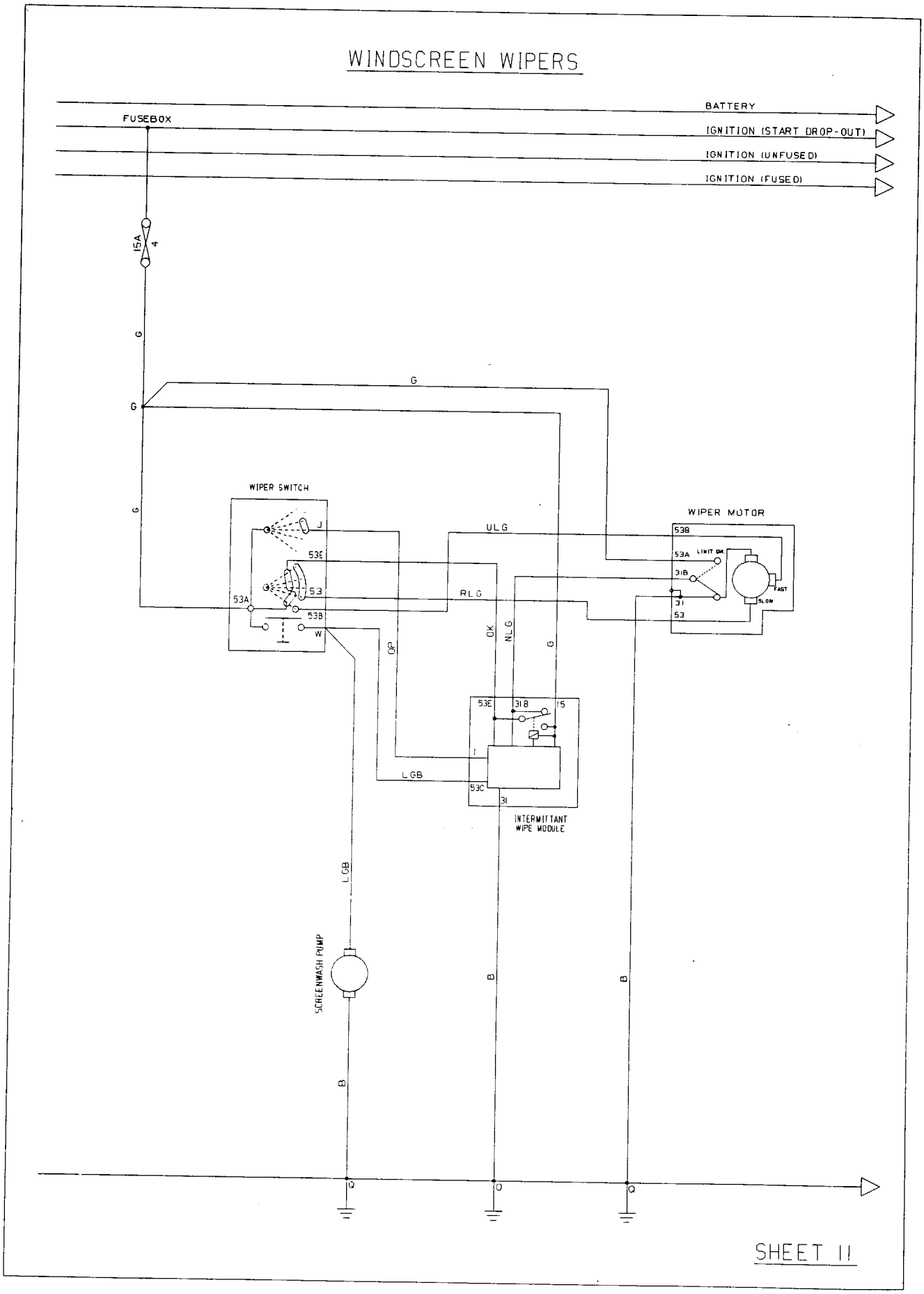
WINDSCREEN WIPERS
BATTERY
IGNITION (START DROP-OUT)
IGNITION (UNFUSED)
IGNITION (FUSED)
FUSEBOX
15A
4
G
WIPER SWITCH
J
53E
53
53A
53B
W
ULG
RLG
OP
OK
NLG
WIPER MOTOR
53B
53A
LIMIT SW.
31B
31
53
FAST
SLOW
53E
31B
15
1
LGB
53C
31
INTERMITTANT WIPE MODULE
LGB
SCREENWASH PUMP
B
Q
SHEET 11

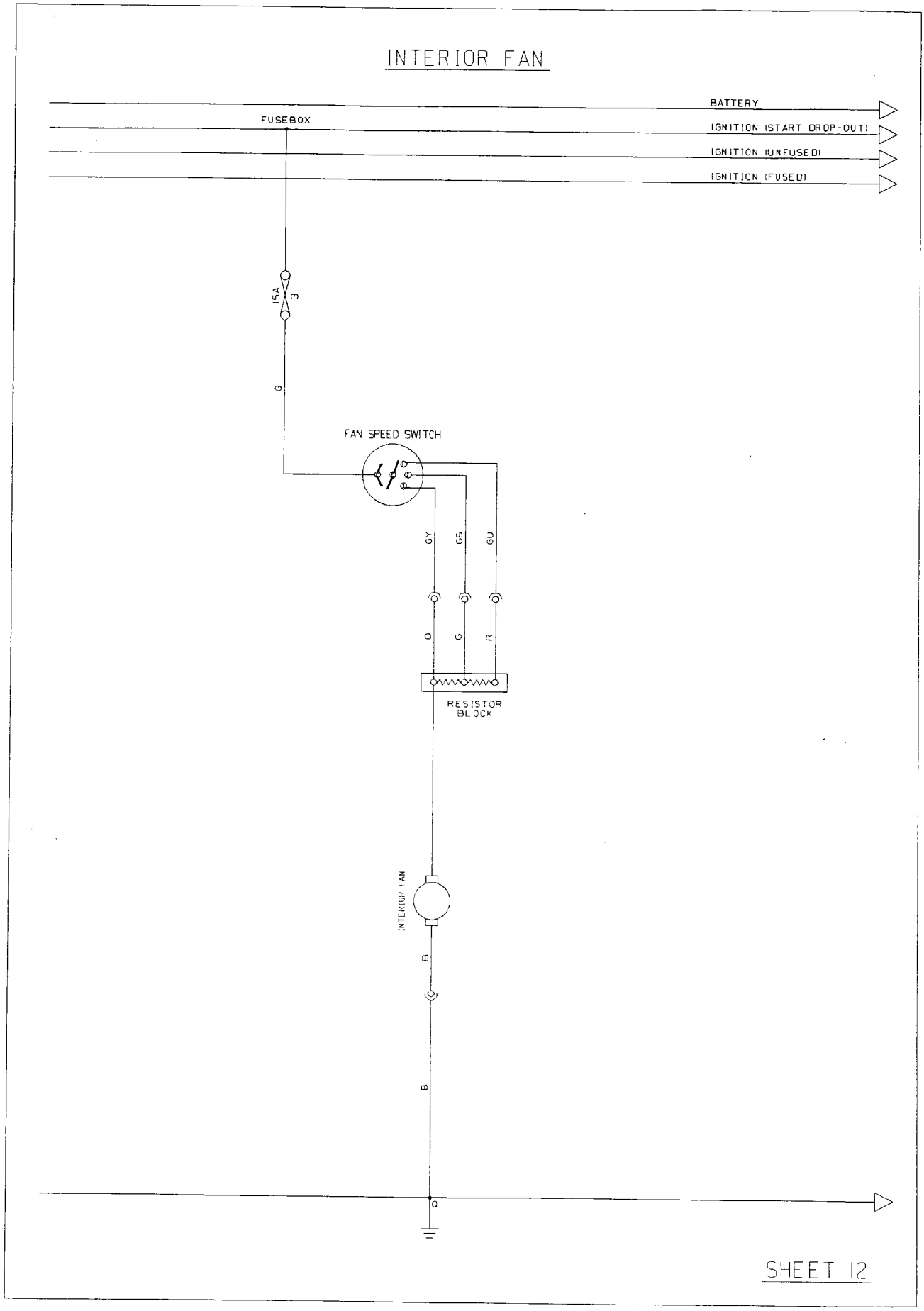
INTERIOR FAN
BATTERY
FUSEBOX
IGNITION (START DROP-OUT)
IGNITION (UNFUSED)
IGNITION (FUSED)
15A
3
G
FAN SPEED SWITCH
GY
GS
GU
O
G
R
RESISTOR BLOCK
INTERIOR FAN
B
B
O
SHEET 12

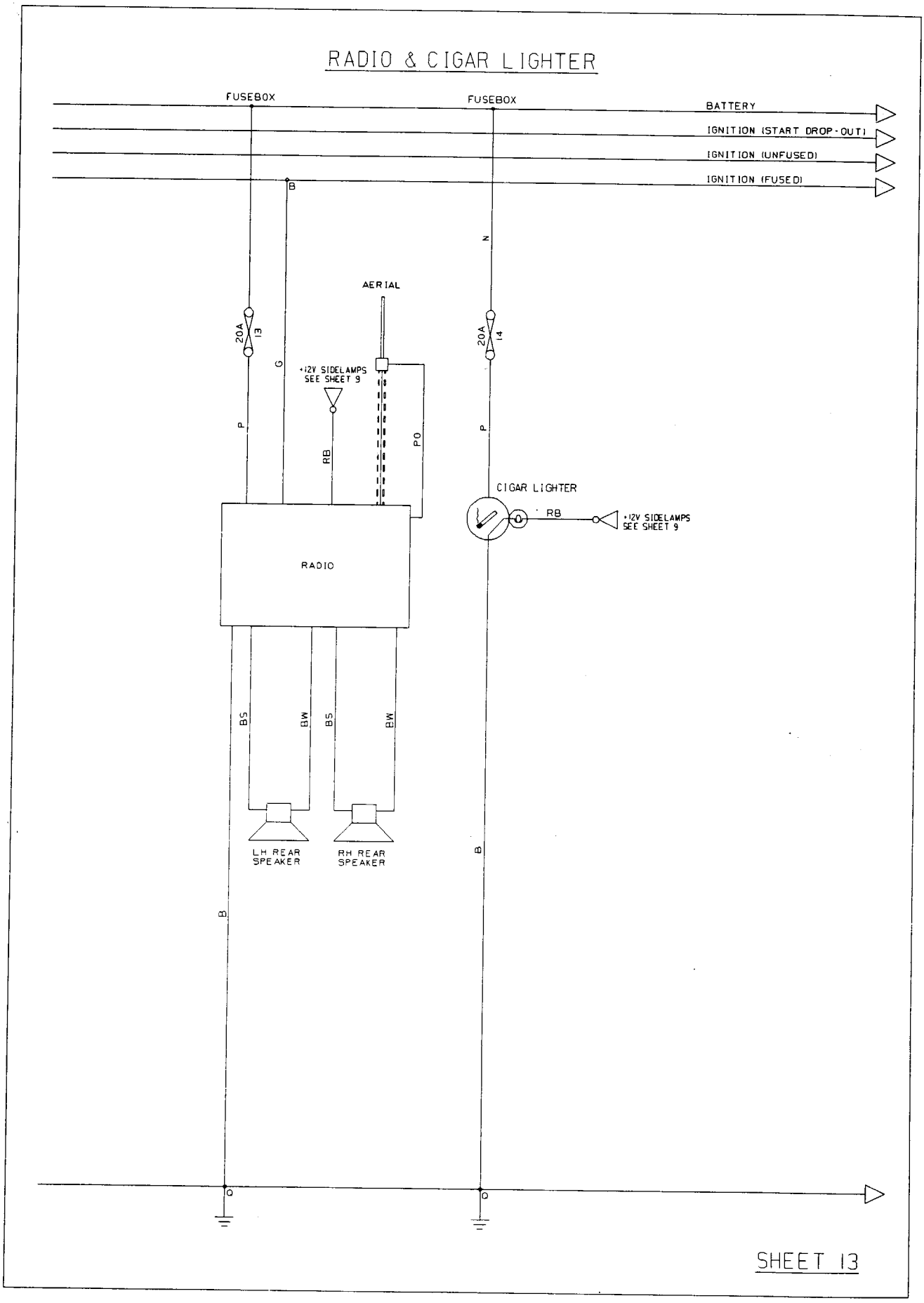
RADIO & CIGAR LIGHTER
FUSEBOX
FUSEBOX
BATTERY
IGNITION (START DROP-OUT)
IGNITION (UNFUSED)
IGNITION (FUSED)
B
N
AERIAL
20A
13
20A
14
G
+12V SIDELAMPS
SEE SHEET 9
P
RB
PO
P
CIGAR LIGHTER
RB
+12V SIDELAMPS
SEE SHEET 9
RADIO
BS
BW
BS
BW
LH REAR
SPEAKER
RH REAR
SPEAKER
B
B
SHEET 13

POWER & GROUND STRUCTURE

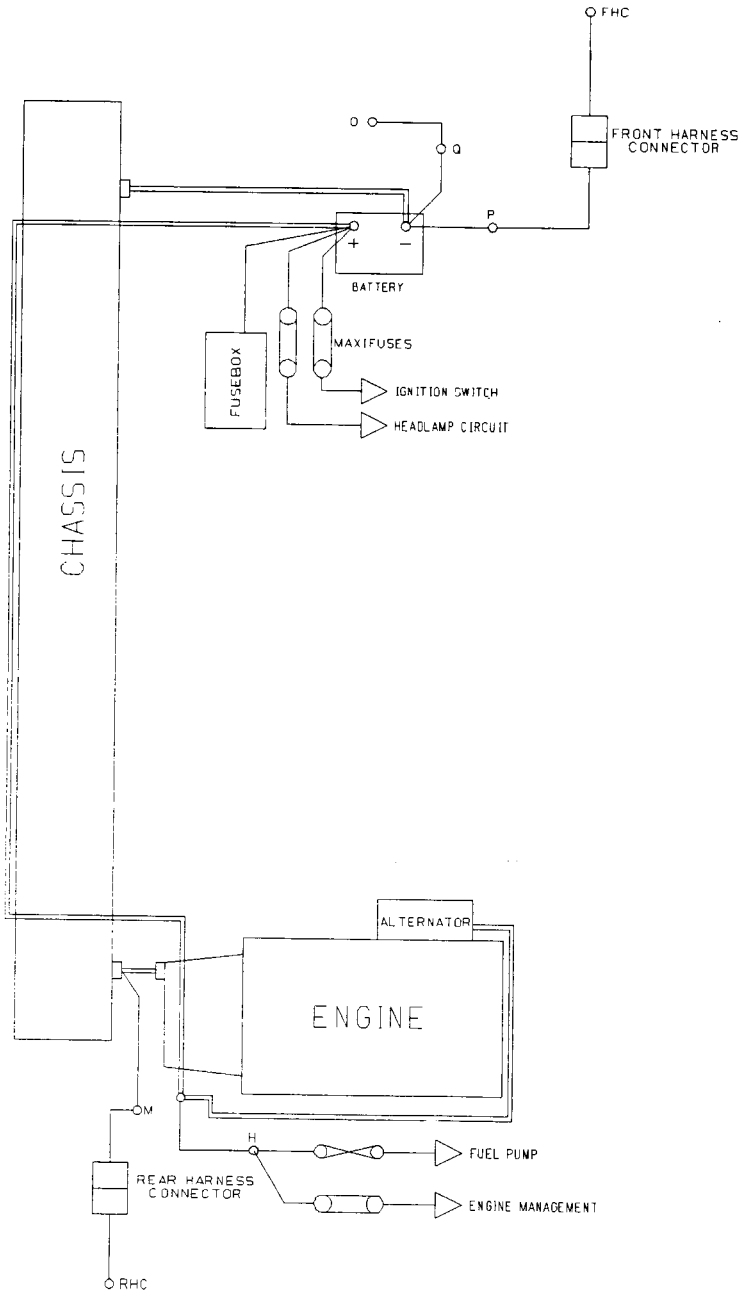

SHEET 14

INTER-HARNESS CONNECTORS

CONNECTOR ON MAIN HARNESS		CONNECTOR ON MATING HARNESS
	FRONT & REAR HARNESS CONNECTORS (FHC & RHC)	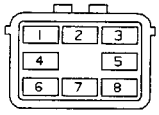
BLUE	ENGINE HARNESS CONNECTOR 1 (EHC 1)	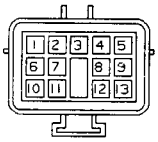 BLUE
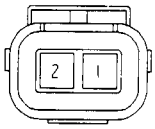	ENGINE HARNESS CONNECTOR 2 (EHC 2)	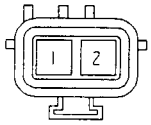
BLACK	ENGINE HARNESS CONNECTOR 3 (EHC 3)	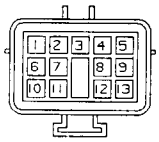 BLACK
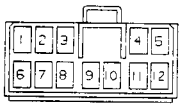	ALARM HARNESS & IMMOBILISER CONNECTORS (AHC & IC)	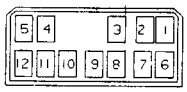

SHEET 15

FUSES

FUSEBOX A

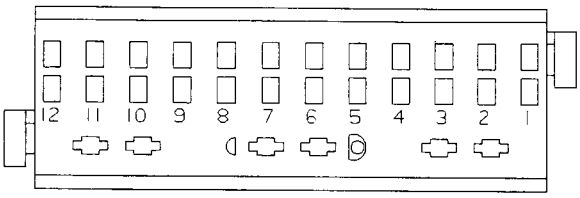

NO.	RATING	APPLICATION
01	3A	REAR FOG LAMP
02	2A	ALARM
03	15A	INTERIOR FAN
04	15A	WIPER MOTOR
05	3A	REVERSE LAMP
06	7.5A	DIRECTION INDICATORS
07	5A	IGNITION SERVICES
08	7.5A	STOP LAMPS & BATTERY SERVICES
09	10A	HAZARD LAMPS
10	7.5A	HORN
11	10A	ALARM & INTERIOR LAMP
12	25A	COOLING FAN

FUSEBOX B

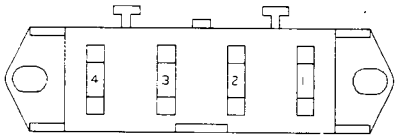

NO.	RATING	APPLICATION
13	20A	RADIO
14	20A	CIGAR LIGHTER
15	5A	SIDELAMPS LH
16	5A	SIDELAMPS RH

FUEL PUMP FUSE

NO.	RATING	APPLICATION
17	10A	FUEL PUMP

MAXI-FUSES

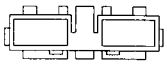

NO.	RATING	APPLICATION
01	50A	IGNITION SWITCH
02	50A	HEADLAMPS
03	40A	ENGINE MANAGEMENT SYSTEM

MN.12 - COBRA 6422 VEHICLE SECURITY ALARM (U.K. option)

The optional upgraded vehicle alarm system on U.K. market cars was updated from a Cobra 6019HF to a Cobra 6422 based system from the following change point:
VIN; W 1947 (October '97); plus W 1938

The 6422 system meets Thatcham 'Category One' standards pertinent to the U.K. insurance industry and operates in much the same way as the previous, 6019HF system (which also qualified for category one), but significant differences include:

- New, ergonomic, transmitter key;
- Deletion of override switch on siren housing;
- Facility to programme new transmitter keys. Special note should be taken of the potential for inadvertent transmitter code wiping, possible when using the touch key (which is only required in case of transmitter key loss or failure). Code wiped transmitters may be subsequently re-programmed by the owner - see later.

The following instructions for use are based on those provided in the Owner's Handbook:

Upgraded Vehicle Security Alarm (if fitted)

In order to provide an exceptional level of theft and vandal protection, the Lotus Elise may be factory fitted with a vehicle security alarm incorporating a Cobra 6422 system. Features include:

- Ingress protection using sensing switches on both doors, front bonnet and engine lid.
- Selectable cockpit intrusion sensing using a hyperfrequency radar sensor.
- Automatic (passive) engine immobilisation to prevent the engine from being started.
- Self powered siren to maintain protection if the vehicle power supply is interrupted.
- 'Dynamic coding' of the transmitter keys; Each time the transmitters are used, the operating frequency is randomly changed to guard against the possibility of code copying.

Transmitter Keys

Two transmitter keys are provided with the car, together with two electronic touch keys. The transmitter key is used to arm and disarm the alarm and to deselect the intrusion sensor. The touch key is provided as a safety back up in case of transmitter key failure (e.g. flat battery), and should be kept separate (i.e. ***not*** on the same keyring), but readily available. Note that misunderstood use of the touch key can result in the transmitter key codes being wiped (see later).

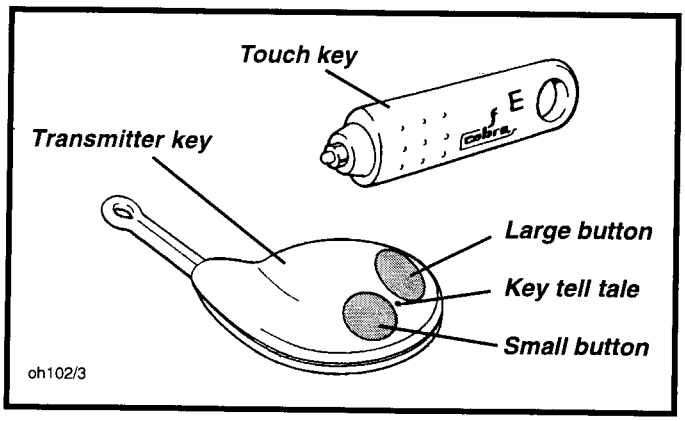

Arming the Alarm

Remove the ignition key, close and lock both doors, and check that the engine lid and front bonnet are shut. The roof may be either raised or stowed. Press once, the larger of the two buttons on the transmitter key. This command will be acknowledged by:

- Two flashes of the hazard warning lamps;
- Flashing of the alarm tell tale in the instrument pod.

Check that these indications occur. If not, press the button a second time, as the first press may have switched off the passive immobilisation (see later).

Note that if the system is armed when a door, engine lid or front bonnet is not fully closed, a buzzer will sound continuously until the opening is secured. **If still open after 40 seconds, the siren will sound.**

After arming the system, a period of at least 40 seconds must elapse before all functions and sensors become fully active. After this time, the alarm will be triggered by any of the following actions:

- Opening a door, engine lid or front bonnet;
- Movement detected within the cockpit;
- Energising the ignition circuit ('hot wiring').

When triggered, the electronic siren will sound and the hazard warning lamps will flash for a period of approximately 30 seconds before closing down and resetting, ready for any further triggering input. If the engine lid or front bonnet are left open, the alarm will repeat after a short delay, and continue in this sequence for a total of ten cycles.

To silence the siren when the alarm has been triggered, press once the larger of the two buttons on the transmitter key. The siren will reset and the system will remain armed.

Disarming the Alarm

To disarm the alarm prior to entering the vehicle, press once the larger of the two buttons on the transmitter key. This command will be acknowledged by:

- One flash of the hazard warning lamps;
- Extinguishing of the alarm tell tale in the instrument panel. (If the tell tale is flashing intermittently, the alarm has been triggered during the armed period - see 'Trouble Shooting')

Passive Immobilisation

In order to provide a measure of automatic vehicle security, independent of any driver initiative, the system will 'passively' immobilise the engine's cranking and running circuits either;

- four minutes after switching off the ignition;
- or one minute after switching off and opening and closing a door.

Immobilisation will be indicated by:

- the alarm tell tale flashing.
- and if initiated by the door being opened and closed: two flashes of the hazard warning lamps.

Note that these indications are the same as those for the arming of the alarm, but in this instance it is only engine immobilisation which is activated.

To start the car after immobilisation has been activated, it is necessary to switch ***OFF*** the ignition and press once the large button on the transmitter key. The alarm tell tale will be extinguished.

Intrusion Sensing

A hyperfrequency radar detector, mounted at the rear of the centre tunnel, is able to detect substantial movement within the cockpit and trigger the alarm in the event of unauthorised intrusion. The range and sensitivity of the intrusion sensor may be adjusted if necessary - see page 6.

If an animal is to be left in the vehicle when the alarm is armed, it is necessary temporarily to switch off the intrusion sensing by the following procedure:

- Arm the system in the usual way by pressing once the large button on the transmitter.
- Within 40 seconds, press once the smaller button on the transmitter. This action will be acknowledged by a single buzz of the buzzer.

Note:

Intrusion sensing will automatically be reinstated the next time the alarm is armed.
Do not inhibit operation of the radar detector by placing bags or large objects against the sensor.

Summary of Alarm Normal Operation

In normal use, whenever leaving the car, close both lids, lock the doors using the key, and press once the transmitter large button to arm the alarm - acknowledged by two hazard lamp flashes, and the alarm tell tale flashing. **Check that two hazard flashes occur** and not one (see below).

On return to the car, whether or not the alarm is armed, again press once the transmitter large button. This will either disarm the alarm, or, if the alarm was not armed, the passive immobilisation will be switched off. In both cases, this will be acknowledged by **one hazard lamps flash** and the alarm tell tale going out.

Emergency Disarming

In the event of lost or failed transmitter keys, an electronic touch key may be used to mobilise the engine: Enter the vehicle (causing the alarm to be triggered if it is armed), and with the ignition ***OFF***, insert the touch key into the receptacle on the right hand side of the steering column shroud. This will disarm the alarm and mobilise the engine. Note that if this operation is performed with the ignition ***ON***, the transmitter key codes will be wiped, and must be reprogrammed (see below).

Passive immobilisation will still function after the appropriate delay (see above), requiring another insertion of the touch key, with ignition OFF, to overcome.

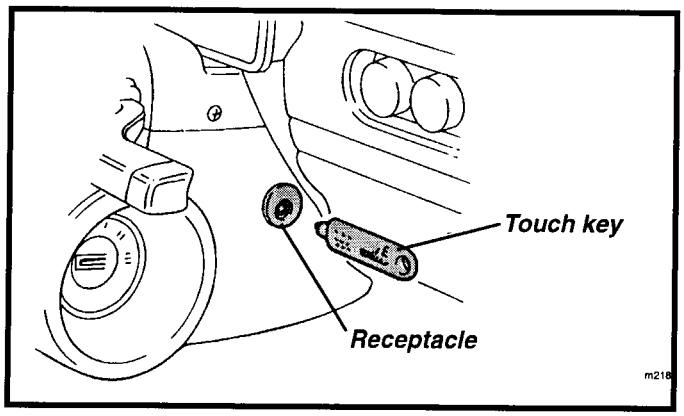

New Transmitter Programming

If a transmitter key is lost or damaged, a new uncoded key may be ordered, and then programmed to a particular car using the following procedure:

1. With the alarm system disarmed ***and mobilised***, switch on the ignition. Note that if the transmitter key codes have been wiped, the alarm must be disarmed using the touch key (see above).
2. Insert a touch key into the receptacle on the steering column shroud. The alarm tell tale will light steady.
3. Press, simultaneously, both buttons on the new transmitter key for about ten seconds, until the tell tale in the ***key*** stops flashing and goes out. When the buttons are released, the key tell tale will light steady.
4. Press either one of the transmitter key buttons; the transmitter key tell tale will blink, and the alarm tell tale in the instrument pod will go out for one second.
5. Repeat 3 and 4 for all other transmitter keys to be used, up to a maximum of four. When all keys have been programmed, switch off the ignition (alarm tell tale will go out).

Note that this programming procedure erases all existing transmitter codes, so that all keys to be used must be reprogrammed at the same time.

Checking the Alarm System

To ensure that optimum vehicle protection is maintained, the alarm system function should be checked periodically:

1. Arm the alarm and wait for 40 seconds;
2. Open either door; The siren should sound and the hazard lamps flash for 30 seconds. To turn off the siren before the 30 seconds have elapsed, press the large button on the transmitter key - this will not disarm the alarm.
3. Repeat step (2) testing the opposite door, the engine lid and the front bonnet (Manually operate the sensor switches to test the engine lid and front bonnet).
4. If the engine lid or front bonnet are left open, the alarm will stop after approximately 30 seconds, and then repeat after a short delay, and continue in this sequence for ten cycles.
5. To test the intrusion sensing, arm the system and within the 30 sec. arming period, check that substantial body movement within the cockpit triggers the alarm, as indicated by the sounding of the buzzer. Disarm the alarm before the 30 seconds elapses, or the siren will be activated. If adjustment is required, refer to page 6.

If the alarm system does not operate as described, refer to the 'Trouble Shooting' guide below.

Alarm Trouble Shooting

Symptom: Vehicle was left for a few minutes without setting the alarm, and now the engine won't start.
Possible cause: Passive immobilisation has taken effect (indicated by the tell tale flashing), as designed - see above.

Symptom: The transmitter key will not arm or disarm system.
Possible cause: Transmitter key battery low. When the key battery becomes low, the transmitter key L.E.D. will blink in an irregular manner, or once only instead of remaining lit until the button is released.

To replace transmitter battery:

a). Open the transmitter key body by levering in the zone marked 'OPEN', and withdraw the battery.
b). The keys are powered by a 3v long life lithium battery type CR2032. With normal use, this should last between 3 and 5 years. After opening the new battery packaging, touch only the sides of the battery, and fit the battery into the key case with the positive side (+) upwards as shown.
c). Press the battery case together.

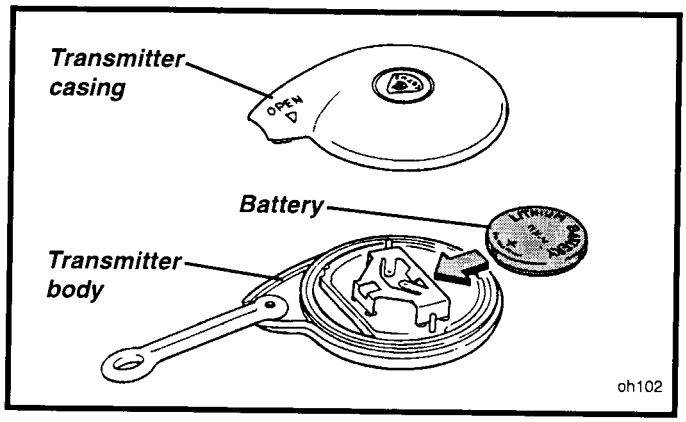

Symptom: Both transmitters fail to operate with good batteries.
Possible cause: Transmitter programming has been inadvertently wiped during use of touch key - reprogramme keys (see above).

Symptom: The alarm triggers for no apparent reason.
Possible cause: When the transmitter key is used to disarm the system, if the alarm had been triggered during the armed period, a 'diagnostic code' will be displayed by the alarm tell tale until the ignition is next switched on. The flash codes are interpreted as follows:
Single flash followed by 2 second break: Caused by a door, engine lid or front bonnet sensor. A sensing switch may require attention.
Three flashes followed by 2 second break: Caused by the intrusion sensor. If there are no loose or moving objects or animals in the vehicle, the sensitivity of the sensor may need adjustment by your dealer.
Four flashes followed by a 2 second break: Caused by the ignition circuit being energised.

Note that, as previously, the security function of the 'Lotus Check' scanner tool, is for use only on vehicles with the base Lucas alarm, unless matching a replacement MEMS 1.9 engine management ECM, or Lucas 5AS security ECM.

Technical Helpline

In case of diffilculties with alarm system diagnosis, a Cobra Technical Helpline is available on 01923 479206.

Disconnecting the Vehicle Battery

If the battery is to be disconnected, note the following precaution: Immediately before disconnection, mobilise the engine using the transmitter or touch key with ignition ***off***, and disconnect the battery within one minute. If disconnected after this time, or when immobilisation is in effect, the siren will sound for 30 seconds.

Location of Alarm Components

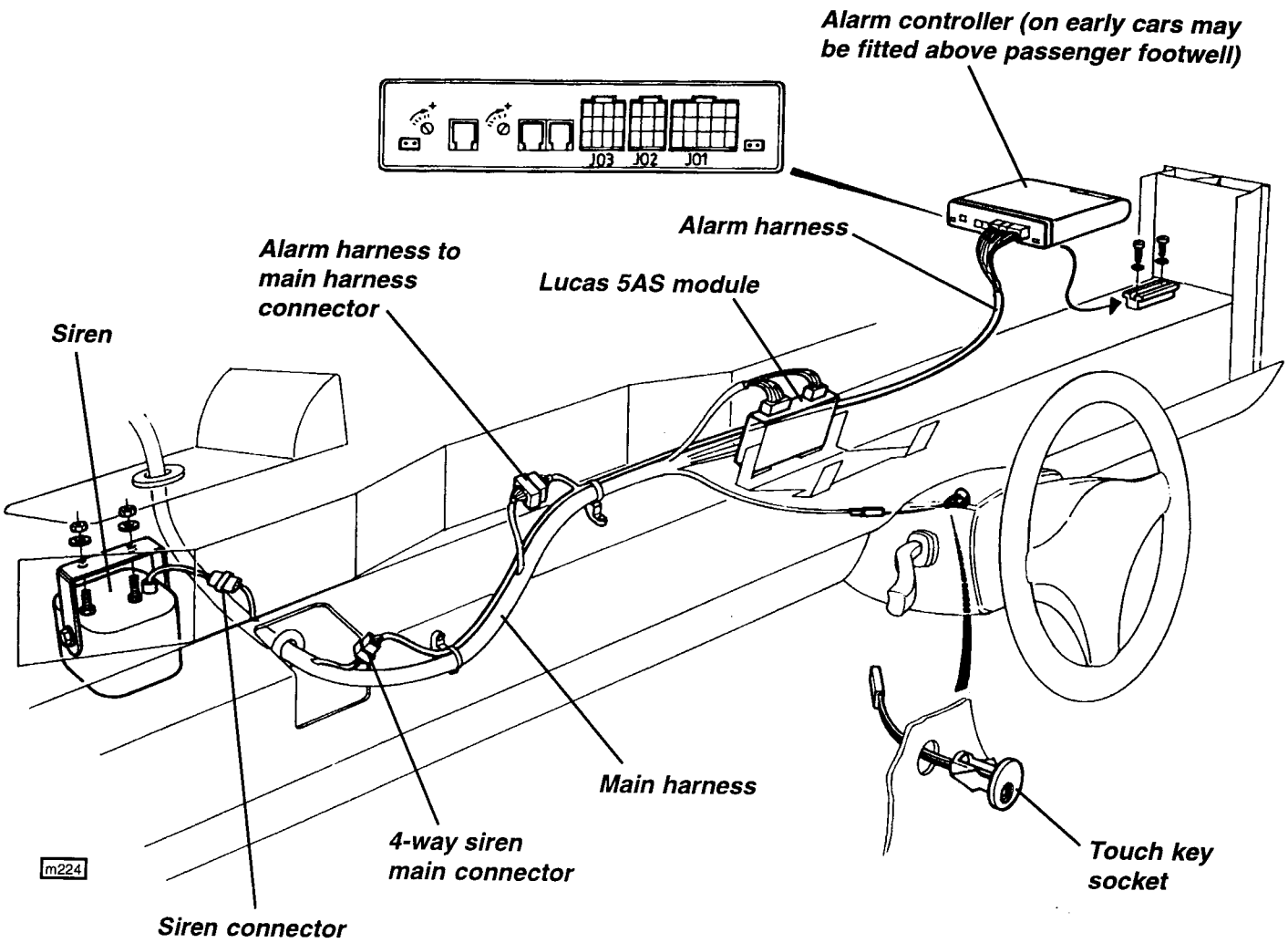

LH side of rear luggage compartment

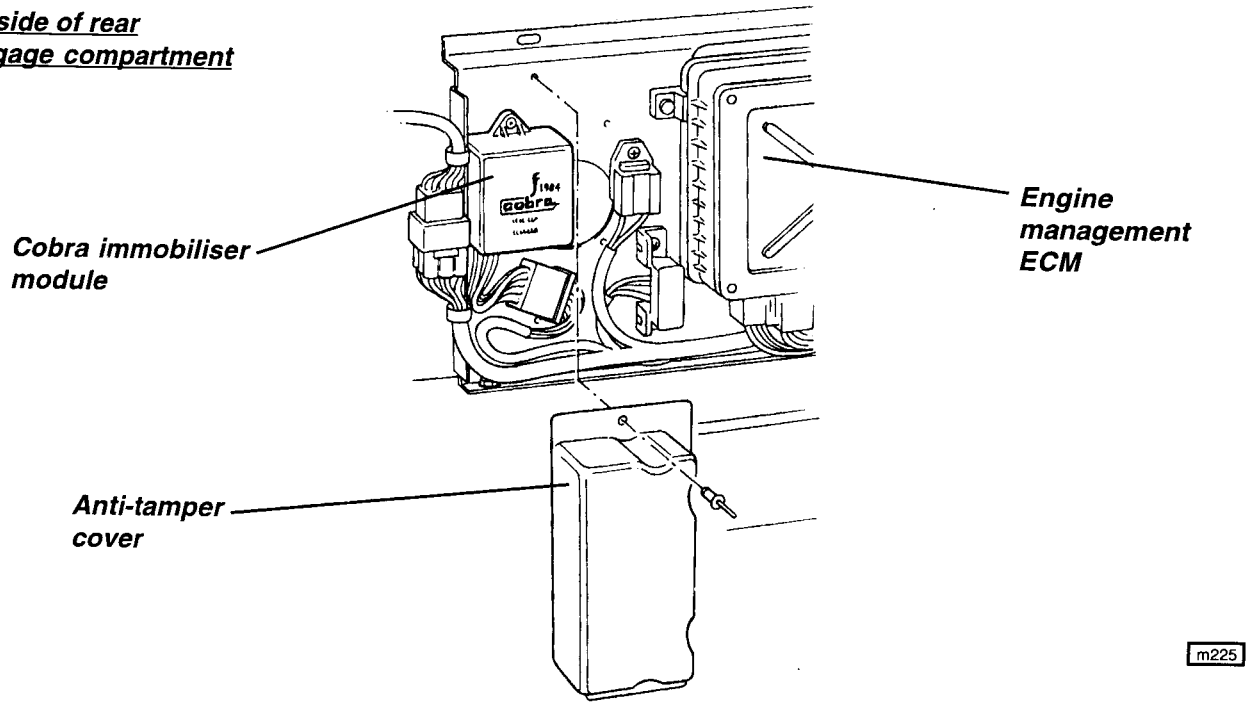

MN.13 - FUSES & RELAYS (Oct. '97 onwards)

A new main fusebox and wiring harness was introduced in October 1997 at the following changepoint:

VIN: W 1941 onwards
plus; 1920, 1926, 1937, 1938
less; 1965, 2002

The passenger side of the front services compartment houses the main fusebox with provision for 22 'Littel' type fuses, plus some spares. A fuse extractor tool is clipped to the fusebox lid. A separate relay block adjacent to the fusebox houses four relays, protected by a clip-on cover.

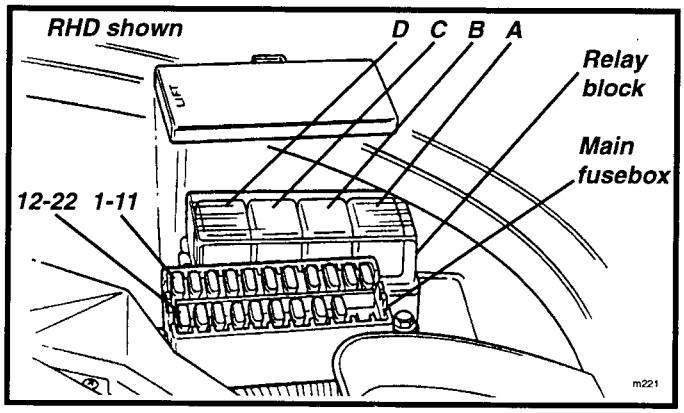

Fuses

Slot	*Rating*	*Circuit*	*Slot*	*Rating*	*Circuit*
1	3A	Rear fog lamp	12	25A	Cooling fan #1
2	2A	Alarm ignition	13	25A	Cooling fan #2 (air con. only)
3	20A	Interior fan	14	20A	Audio
4	15A	Wiper motor	15	20A	Cigar lighter
5	3A	Reverse lamp	16	5A	Sidelamp LH
6	7.5A	Direction ind.	17	5A	Sidelamp RH
7	10A	Ignition services	18	10A	A.C. clutch (air con. only)
8	7.5A	Stop lamps & battery services	19	5A	Re-circ. pump (air con. only)
			20	20A	Fast fan speed relay
9	10A	Hazard lamps	21		-
10	7.5A	Horn	22		-
11	10A	Alarm & Int. lamp			

Relays

A	Horn	C	Dip beam
B	Cooling fan	D	Main beam

MN.14 - CIRCUIT DIAGRAMS - Oct. '97 onwards

Circuit	*Sheet*
Start, Alternator & Ignition	1
Fuel Pump & Cooling Fan	2
Engine Management System	3
Alarm & Immobiliser (Lucas)	4
Alarm & Immobiliser (Cobra 6422)	5A
Stop & Reverse Lamps	6
Direction Indicators & Hazard Lamps	7
Headlamps	8
Sidelamps & Fog Lamps	9
Instruments	10
Windscreen Wipers	11
Interior Fan	12
Radio & Cigar Lighter	13
Power & Ground Structure	14
Inter-Harness Connectors	15
Fuses	16
Hot Soak Pump (A.C. Cars)	17
Cooling Fan Relay 2 (A.C. Cars)	18
Interior Fan (A.C. Cars)	19
Solenoid Valve Control (A.C. Cars)	20
A.C. Request & Control (Non-Heater)	22

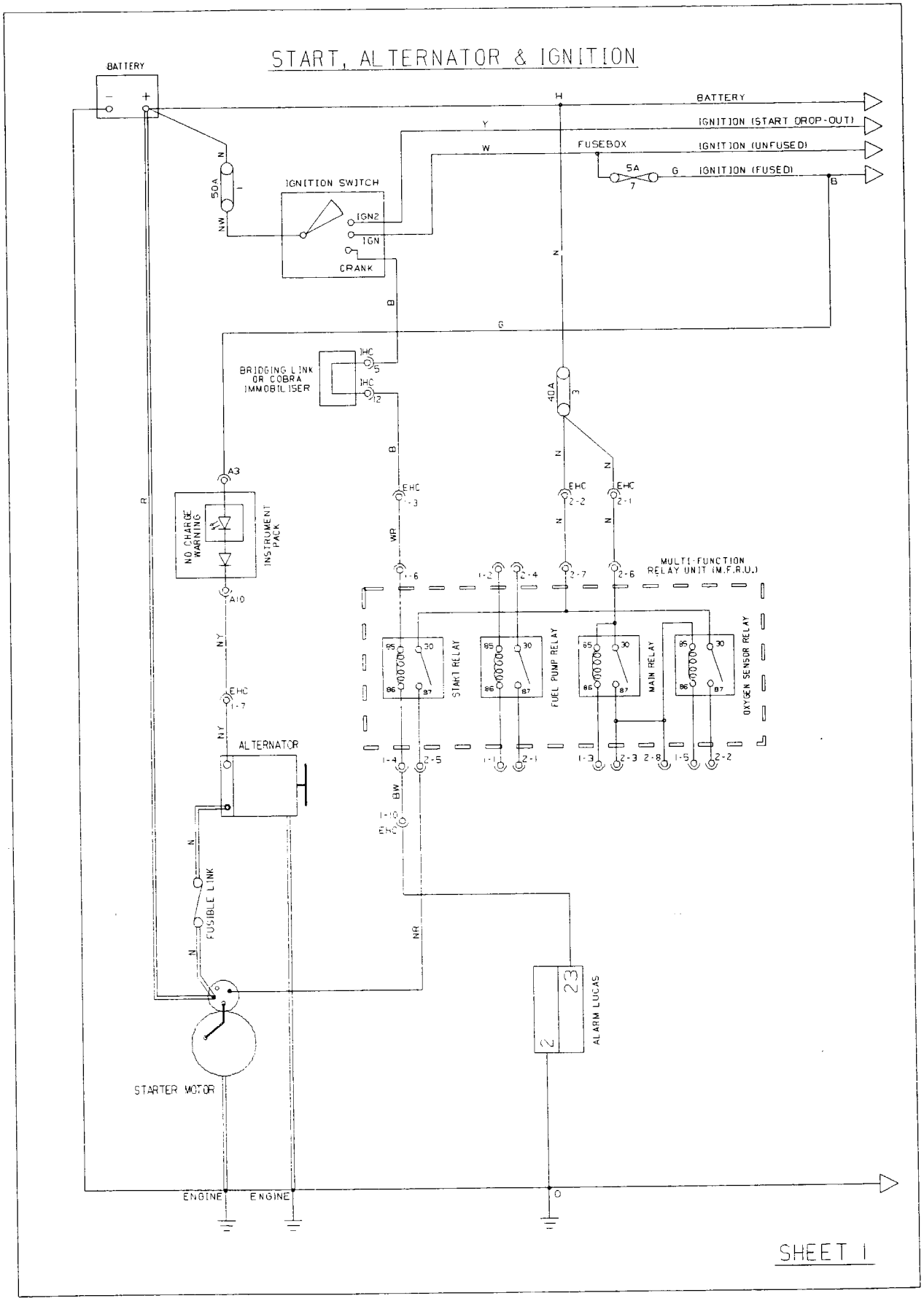
START, ALTERNATOR & IGNITION
BATTERY
BATTERY
IGNITION (START DROP-OUT)
IGNITION (UNFUSED)
IGNITION (FUSED)
FUSEBOX
5A
IGNITION SWITCH
IGN2
IGN
CRANK
50A
BRIDGING LINK OR COBRA IMMOBILISER
40A
NO CHARGE WARNING
INSTRUMENT PACK
MULTI-FUNCTION RELAY UNIT (M.F.R.U.)
START RELAY
FUEL PUMP RELAY
MAIN RELAY
OXYGEN SENSOR RELAY
ALTERNATOR
FUSIBLE LINK
STARTER MOTOR
ALARM LUCAS
ENGINE
ENGINE
SHEET 1

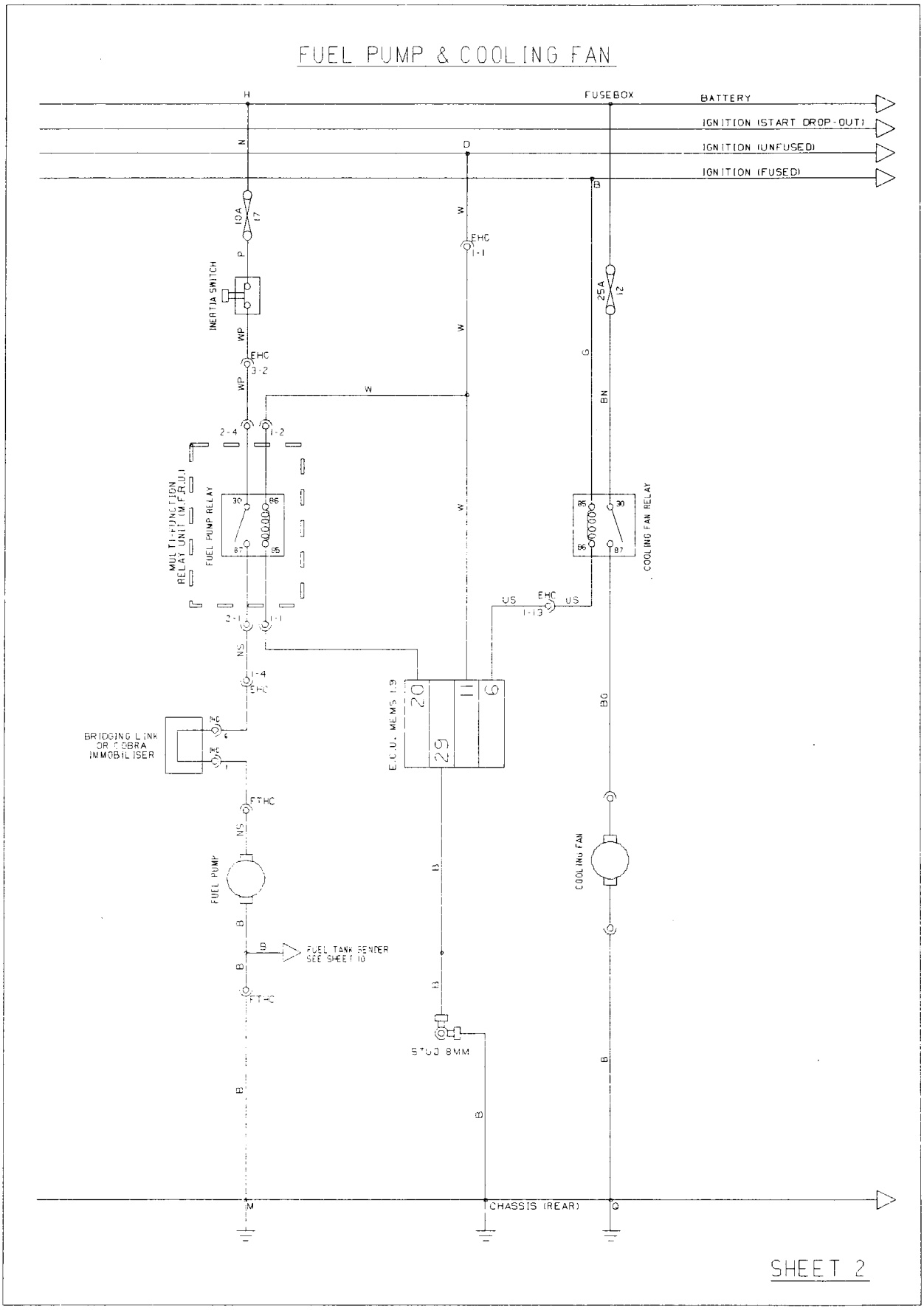
FUEL PUMP & COOLING FAN
FUSEBOX
BATTERY
IGNITION (START DROP-OUT)
IGNITION (UNFUSED)
IGNITION (FUSED)
10A
17
INERTIA SWITCH
EHC
3-2
2-4
1-2
MULTI-FUNCTION RELAY UNIT (M.F.R.U.)
FUEL PUMP RELAY
30
86
87
85
3-1
1-1
1-4
BRIDGING LINK OR COBRA IMMOBILISER
FTHC
FUEL PUMP
FUEL TANK SENDER SEE SHEET 10
1-1
1-13
25A
12
COOLING FAN RELAY
E.C.U. MEMS 1.9
20
29
11
6
COOLING FAN
STUD 8MM
CHASSIS (REAR)
SHEET 2

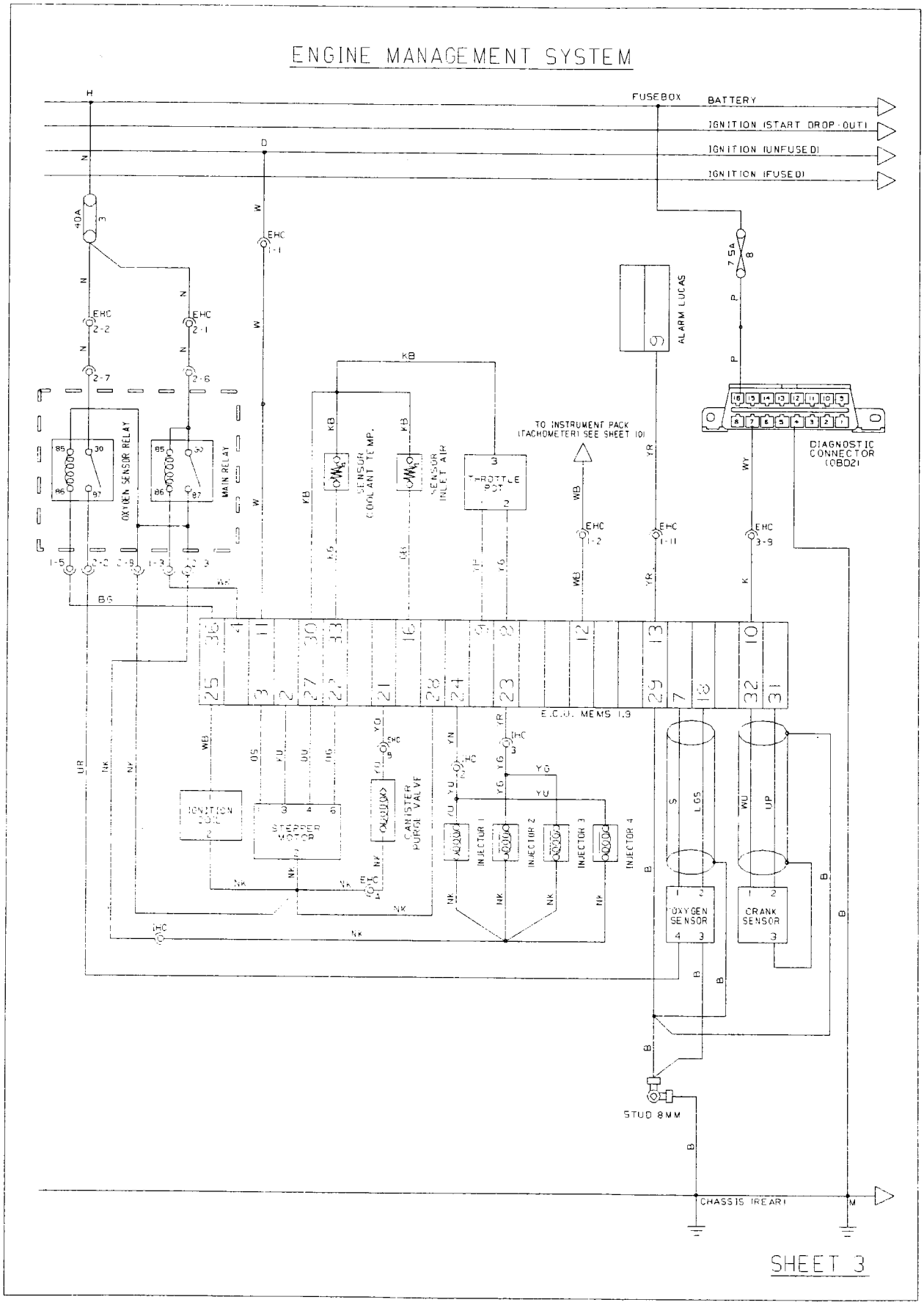
ENGINE MANAGEMENT SYSTEM
FUSEBOX
BATTERY
IGNITION (START DROP-OUT)
IGNITION (UNFUSED)
IGNITION (FUSED)
40A
7.5A
ALARM LUCAS
OXYGEN SENSOR RELAY
MAIN RELAY
SENSOR COOLANT TEMP.
SENSOR INLET AIR
THROTTLE POT
TO INSTRUMENT PACK (TACHOMETER) SEE SHEET 10
DIAGNOSTIC CONNECTOR (OBD2)
E.C.U. MEMS 1.9
IGNITION COIL
CANISTER PURGE VALVE
INJECTOR 1
INJECTOR 2
INJECTOR 3
INJECTOR 4
OXYGEN SENSOR
CRANK SENSOR
STUD 8MM
CHASSIS (REAR)
SHEET 3

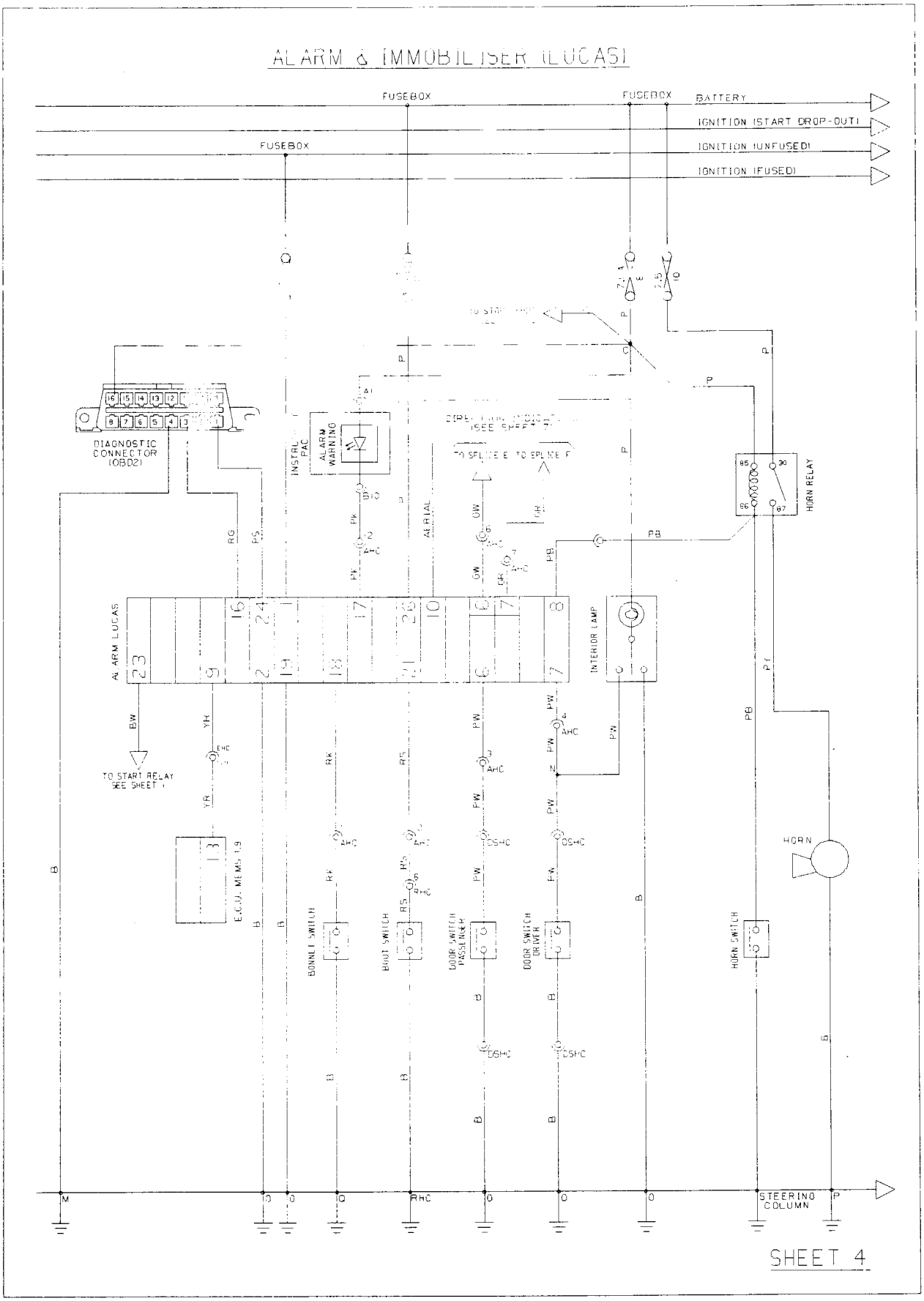
ALARM & IMMOBILISER (LUCAS)
FUSEBOX
FUSEBOX
FUSEBOX
BATTERY
IGNITION (START DROP-OUT)
IGNITION (UNFUSED)
IGNITION (FUSED)
DIAGNOSTIC CONNECTOR (OBD2)
INSTRU PAC
ALARM WARNING
AERIAL
HORN RELAY
ALARM LUCAS
INTERIOR LAMP
TO START RELAY SEE SHEET 1
E.C.U. MEMS 1.9
BONNET SWITCH
BOOT SWITCH
DOOR SWITCH PASSENGER
DOOR SWITCH DRIVER
HORN SWITCH
HORN
STEERING COLUMN
SHEET 4

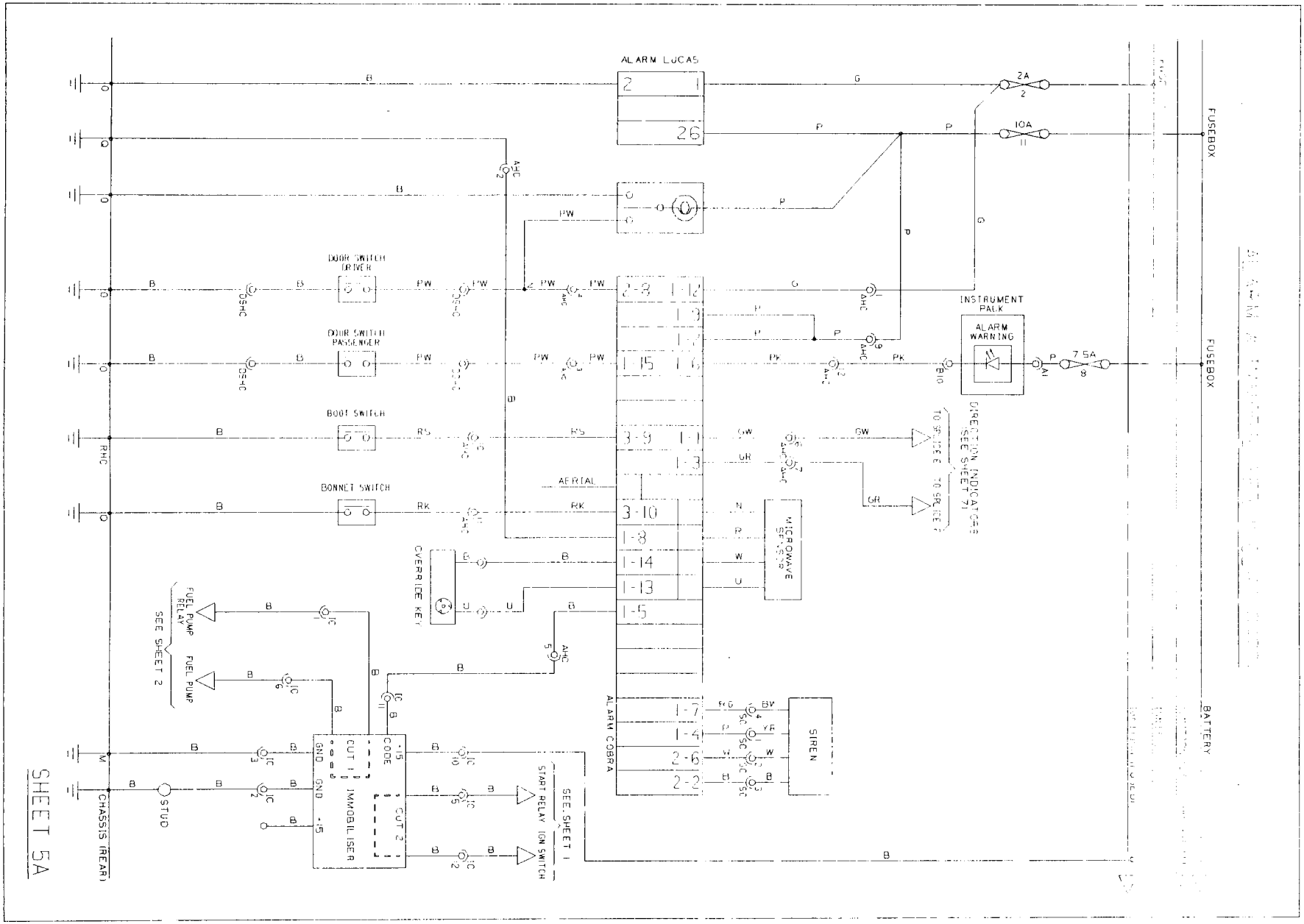
ALARM LUCAS
2
1
26
2A
10A
FUSEBOX
FUSEBOX
BATTERY
DOOR SWITCH DRIVER
DOOR SWITCH PASSENGER
BOOT SWITCH
BONNET SWITCH
INSTRUMENT PACK
ALARM WARNING
7.5A
DIRECTION INDICATOR SEE SHEET 7
TO SPEAKER
TO SPEAKER
AERIAL
MICROWAVE SENSOR
OVERRIDE KEY
FUEL PUMP RELAY
FUEL PUMP
SEE SHEET 2
ALARM COBRA
SIREN
CODE
IMMOBILISER
CUT 1
CUT 2
GND
+15
START RELAY IGN SWITCH
SEE SHEET 1
STUD
CHASSIS (REAR)
SHEET 5A

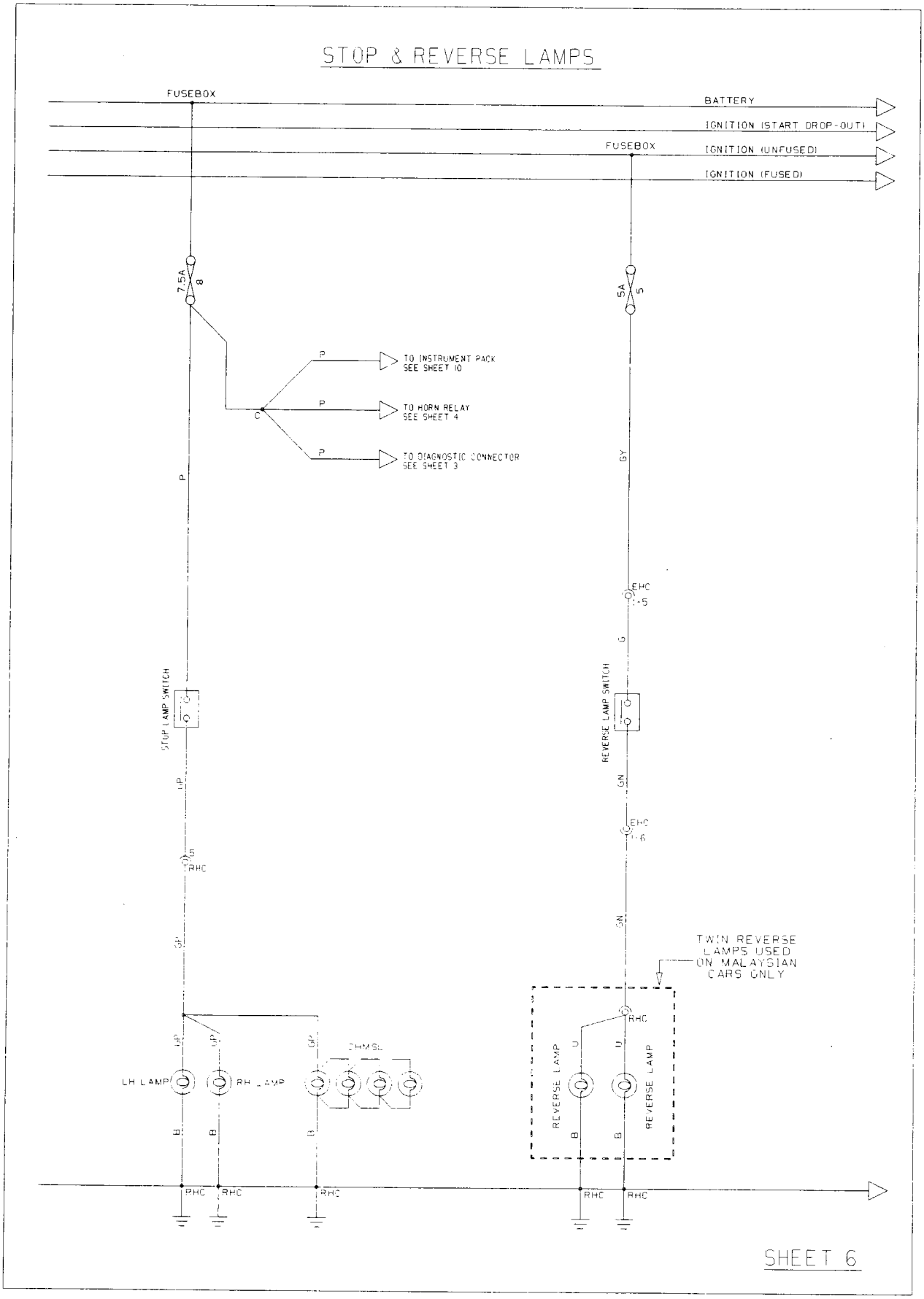
STOP & REVERSE LAMPS
FUSEBOX
BATTERY
IGNITION (START DROP-OUT)
FUSEBOX
IGNITION (UNFUSED)
IGNITION (FUSED)
7.5A
8
5A
5
TO INSTRUMENT PACK
SEE SHEET 10
TO HORN RELAY
SEE SHEET 4
TO DIAGNOSTIC CONNECTOR
SEE SHEET 3
P
C
GY
EHC
1-5
G
STOP LAMP SWITCH
REVERSE LAMP SWITCH
GN
EHC
1-6
RHC
TWIN REVERSE
LAMPS USED
ON MALAYSIAN
CARS ONLY
LH LAMP
RH LAMP
CHMSL
REVERSE LAMP
REVERSE LAMP
U
B
RHC
SHEET 6

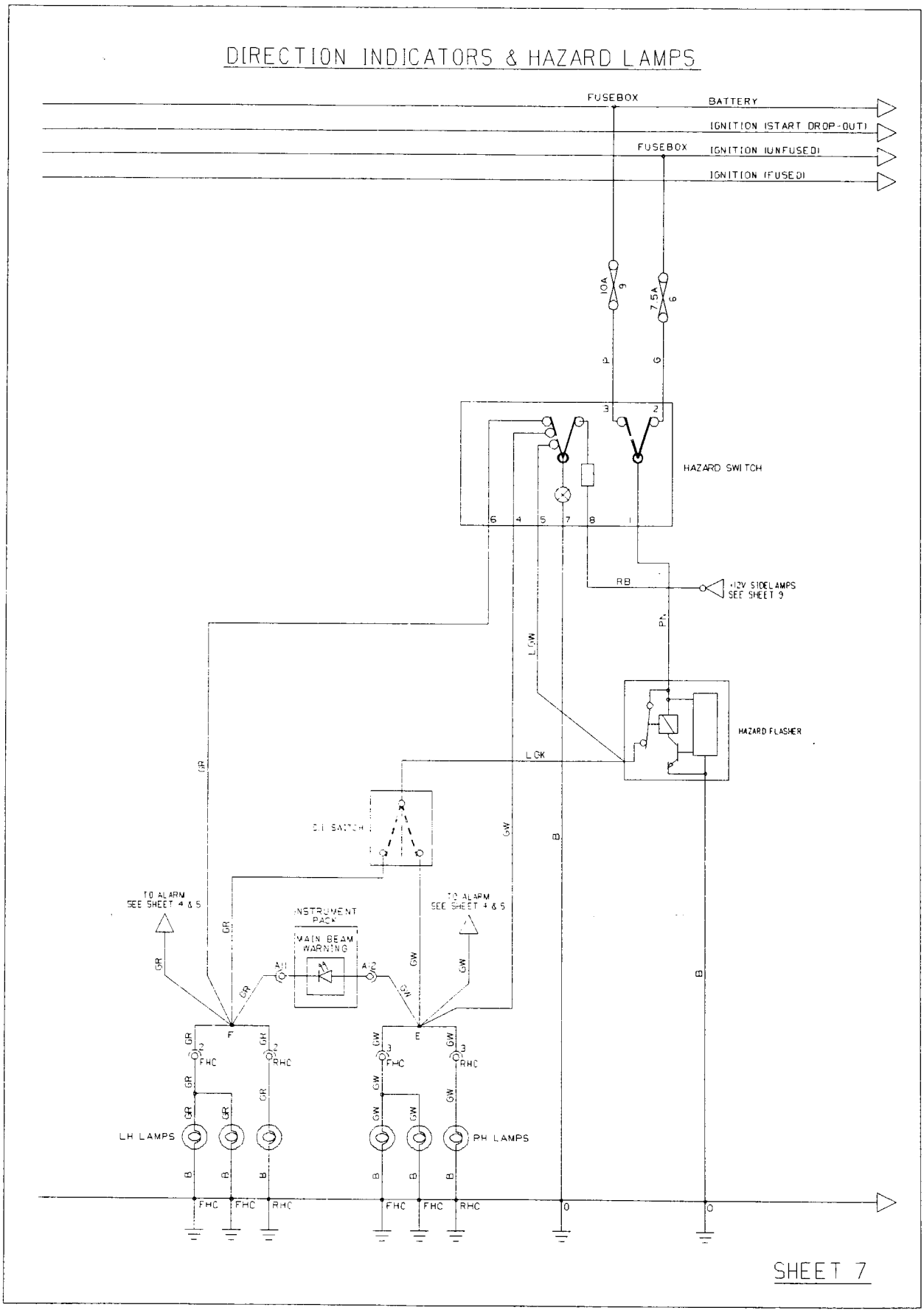
DIRECTION INDICATORS & HAZARD LAMPS
FUSEBOX
BATTERY
IGNITION (START DROP-OUT)
FUSEBOX
IGNITION (UNFUSED)
IGNITION (FUSED)
10A
7.5A
HAZARD SWITCH
RB
+12V SIDELAMPS SEE SHEET 9
HAZARD FLASHER
LGK
D.I. SWITCH
TO ALARM SEE SHEET 4 & 5
INSTRUMENT PACK
MAIN BEAM WARNING
TO ALARM SEE SHEET 4 & 5
LH LAMPS
RH LAMPS
FHC
RHC
SHEET 7

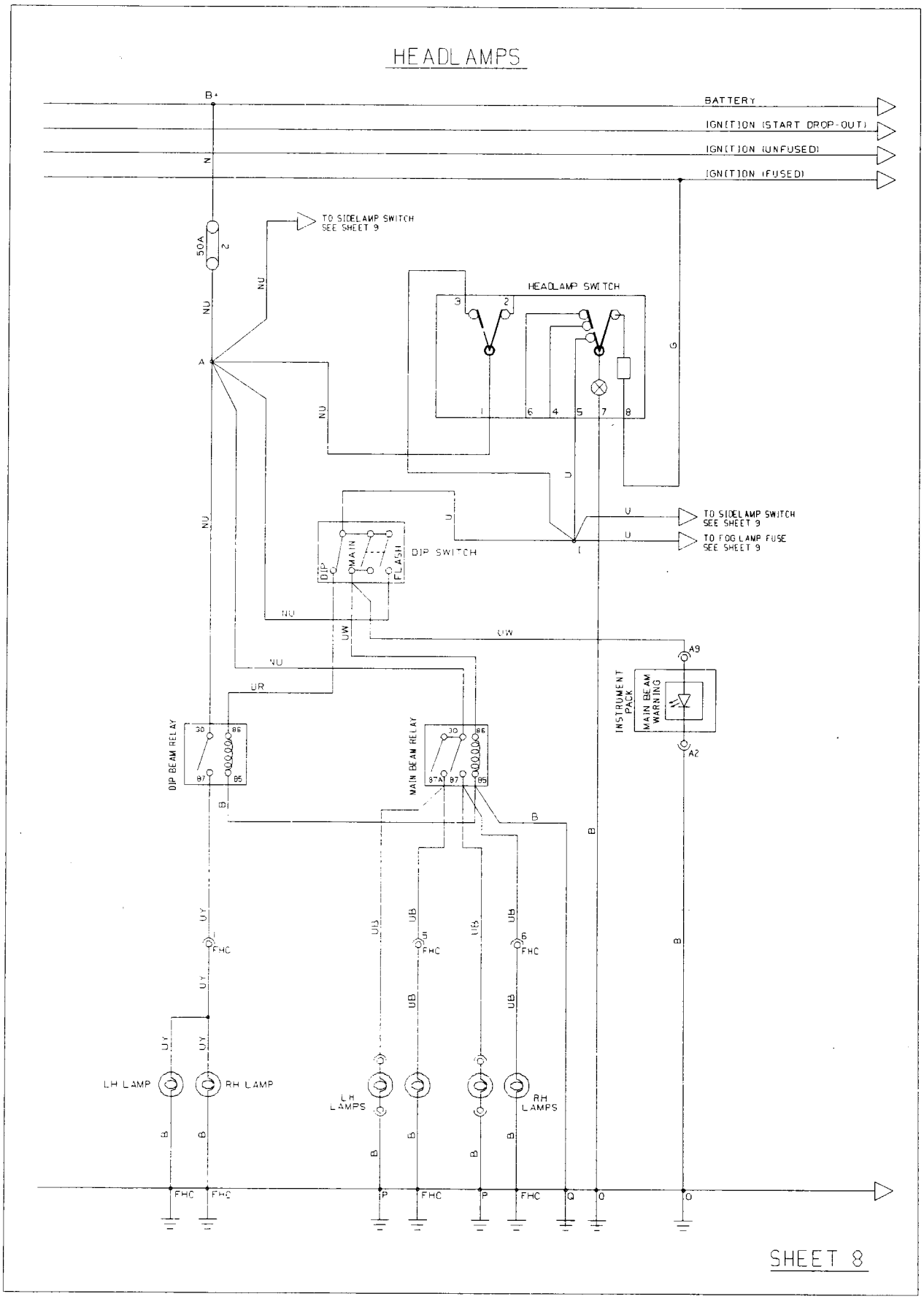
HEADLAMPS
B+
BATTERY
IGNITION (START DROP-OUT)
IGNITION (UNFUSED)
IGNITION (FUSED)
TO SIDELAMP SWITCH SEE SHEET 9
50A
HEADLAMP SWITCH
DIP SWITCH
DIP
MAIN
FLASH
TO SIDELAMP SWITCH SEE SHEET 9
TO FOG LAMP FUSE SEE SHEET 9
INSTRUMENT PACK
MAIN BEAM WARNING
A9
A2
DIP BEAM RELAY
MAIN BEAM RELAY
FHC
LH LAMP
RH LAMP
LH LAMPS
RH LAMPS
SHEET 8

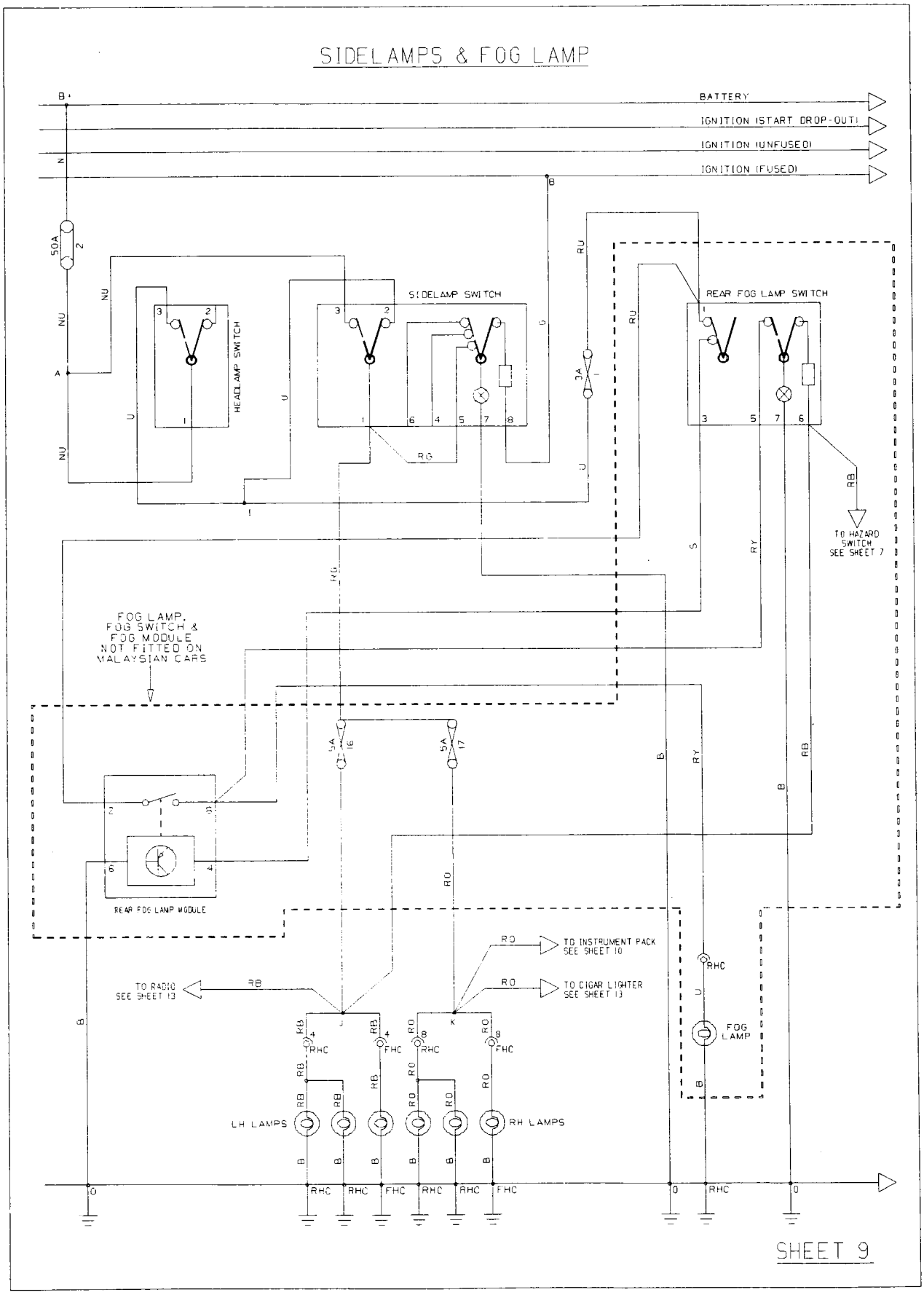
SIDELAMPS & FOG LAMP
BATTERY
IGNITION (START DROP-OUT)
IGNITION (UNFUSED)
IGNITION (FUSED)
50A
HEADLAMP SWITCH
SIDELAMP SWITCH
REAR FOG LAMP SWITCH
TO HAZARD SWITCH SEE SHEET 7
FOG LAMP, FOG SWITCH & FOG MODULE NOT FITTED ON MALAYSIAN CARS
REAR FOG LAMP MODULE
TO INSTRUMENT PACK SEE SHEET 10
TO RADIO SEE SHEET 13
TO CIGAR LIGHTER SEE SHEET 13
FOG LAMP
LH LAMPS
RH LAMPS
SHEET 9

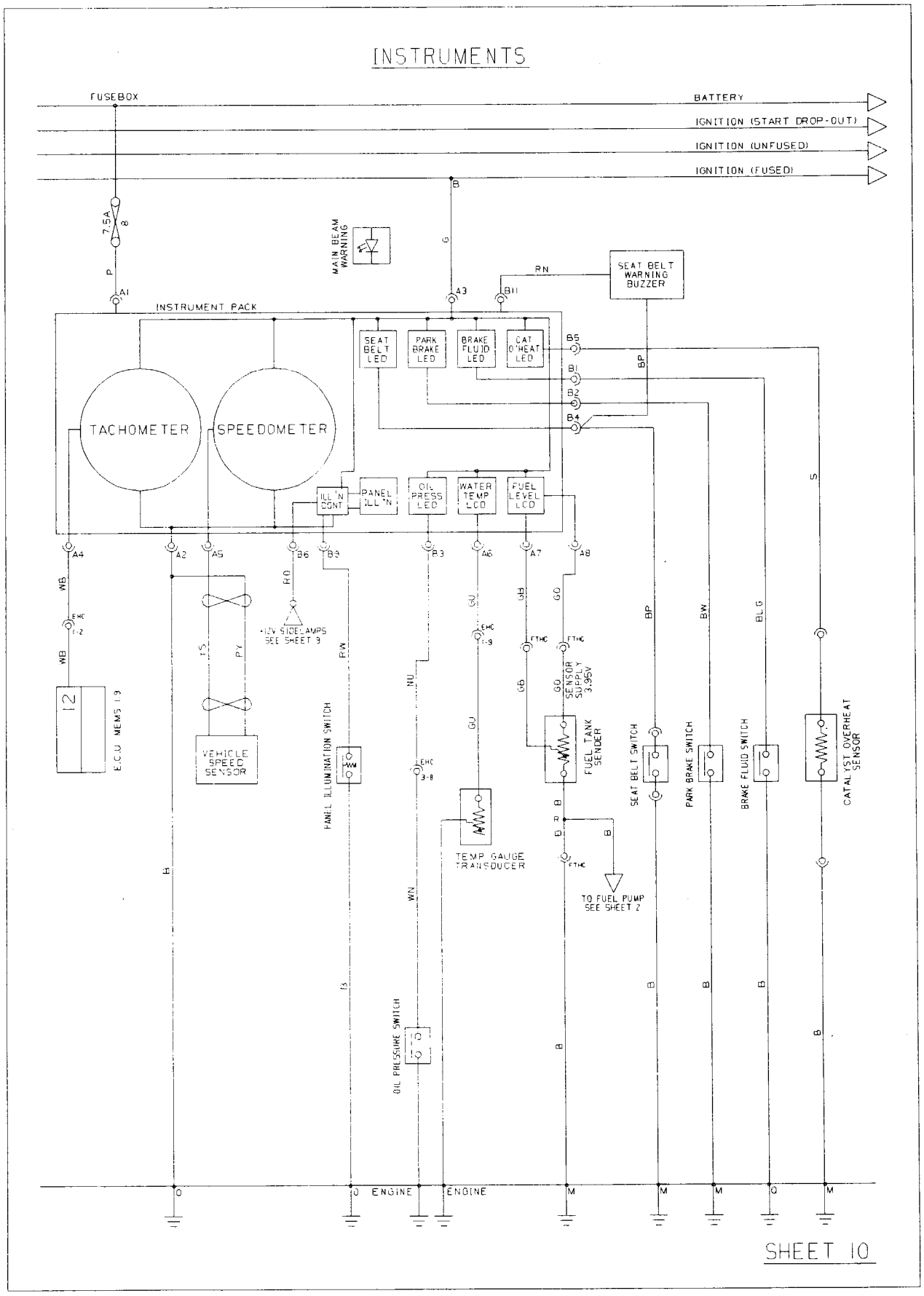
INSTRUMENTS
FUSEBOX
BATTERY
IGNITION (START DROP-OUT)
IGNITION (UNFUSED)
IGNITION (FUSED)
7.5A
MAIN BEAM WARNING
SEAT BELT WARNING BUZZER
INSTRUMENT PACK
SEAT BELT LED
PARK BRAKE LED
BRAKE FLUID LED
CAT O'HEAT LED
TACHOMETER
SPEEDOMETER
ILL'N CONT
PANEL ILL'N
OIL PRESS LED
WATER TEMP LED
FUEL LEVEL LED
+12V SIDELAMPS SEE SHEET 3
E.C.U. MEMS 1.9
VEHICLE SPEED SENSOR
PANEL ILLUMINATION SWITCH
OIL PRESSURE SWITCH
TEMP GAUGE TRANSDUCER
SENSOR SUPPLY 3.95V
FUEL TANK SENDER
TO FUEL PUMP SEE SHEET 2
SEAT BELT SWITCH
PARK BRAKE SWITCH
BRAKE FLUID SWITCH
CATALYST OVERHEAT SENSOR
ENGINE
ENGINE
SHEET 10

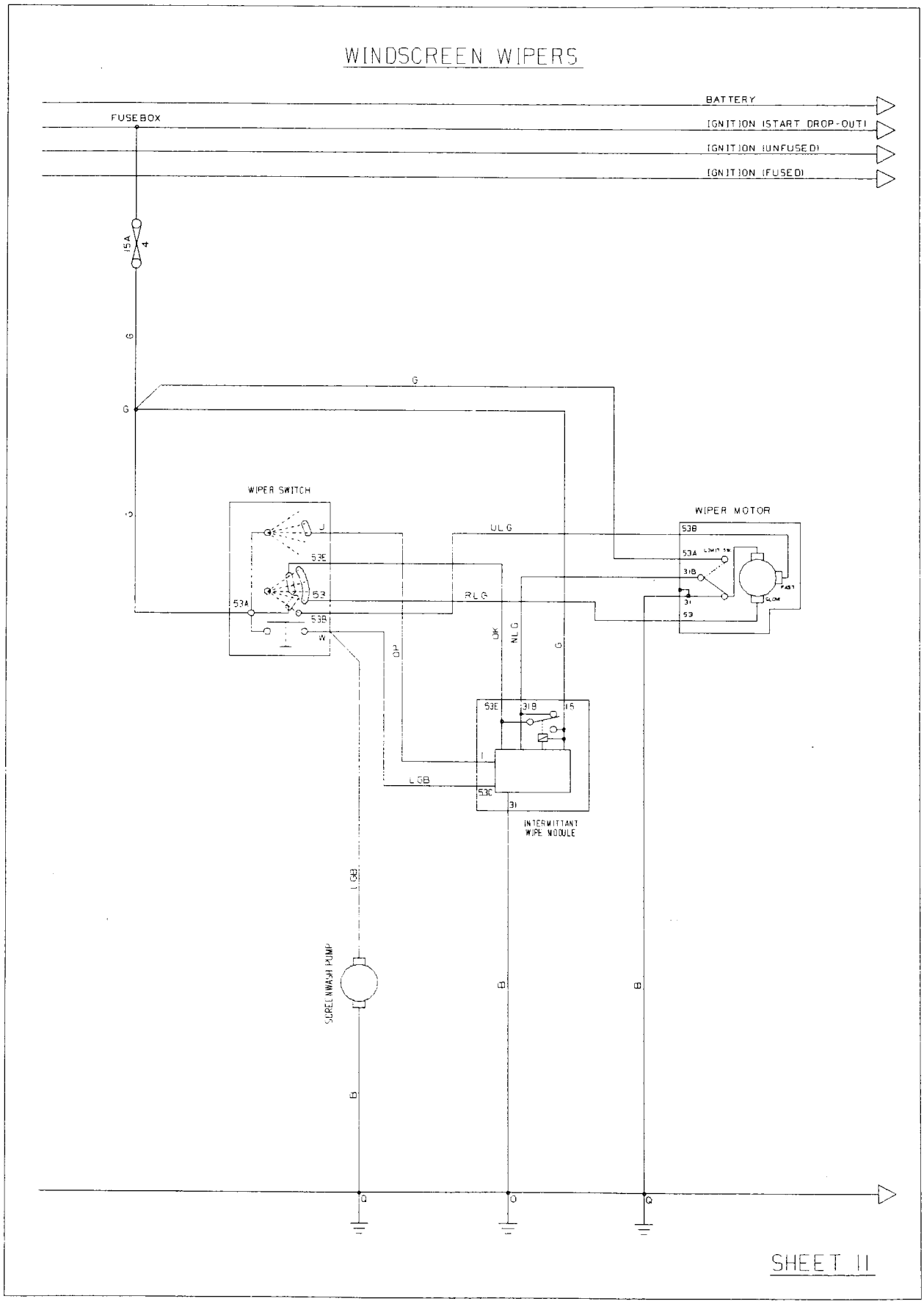
WINDSCREEN WIPERS
BATTERY
FUSEBOX
IGNITION (START DROP-OUT)
IGNITION (UNFUSED)
IGNITION (FUSED)
15A
4
G
WIPER SWITCH
WIPER MOTOR
53E
53
53A
53B
UL G
RL G
OP
OK
NL G
LGB
31B
15
53C
31
INTERMITTANT WIPE MODULE
SCREENWASH PUMP
B
SHEET 11

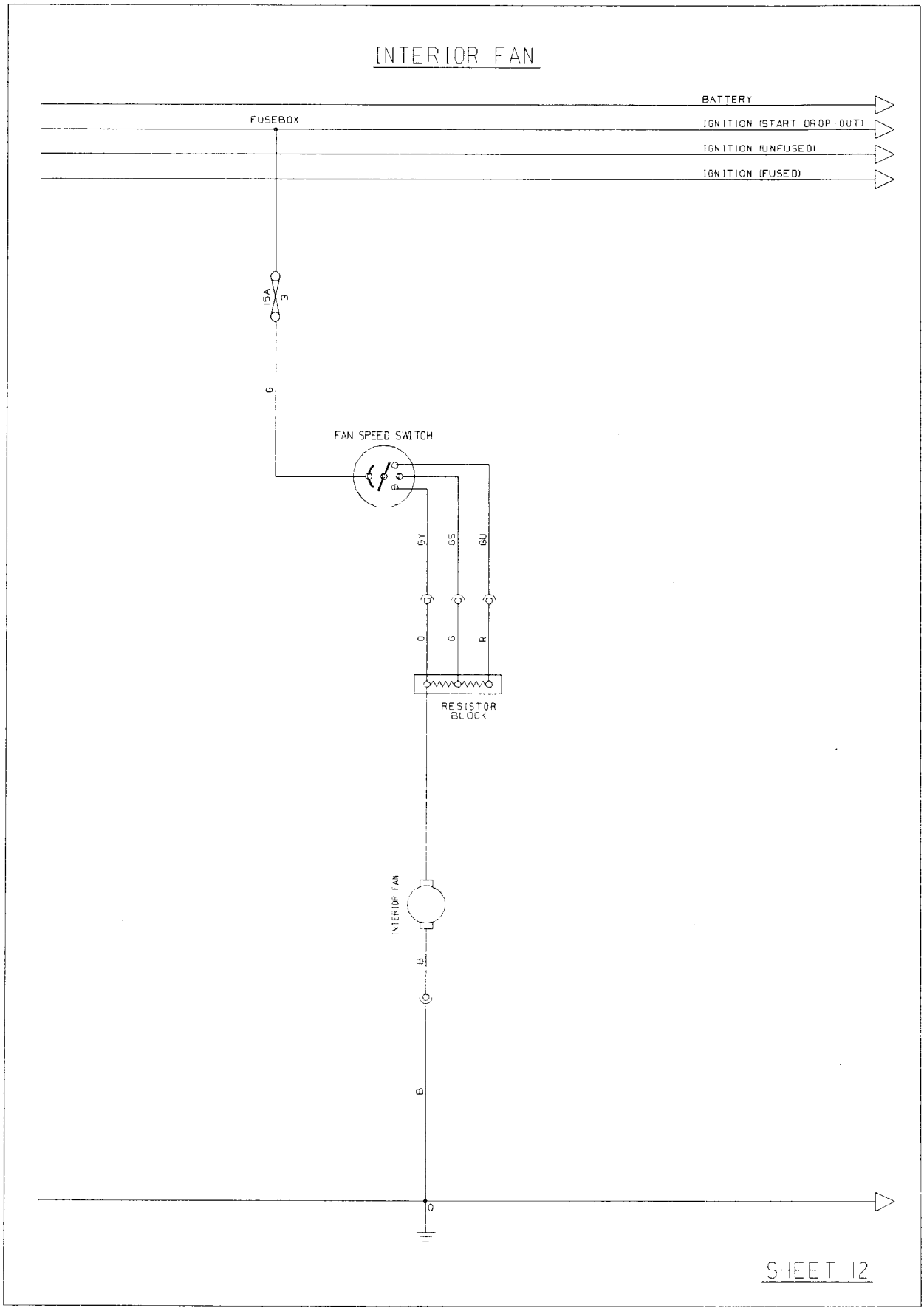
INTERIOR FAN
BATTERY
FUSEBOX
IGNITION (START DROP-OUT)
IGNITION (UNFUSED)
IGNITION (FUSED)
15A
3
G
FAN SPEED SWITCH
GY
GS
GU
O
G
R
RESISTOR BLOCK
INTERIOR FAN
B
B
O
SHEET 12

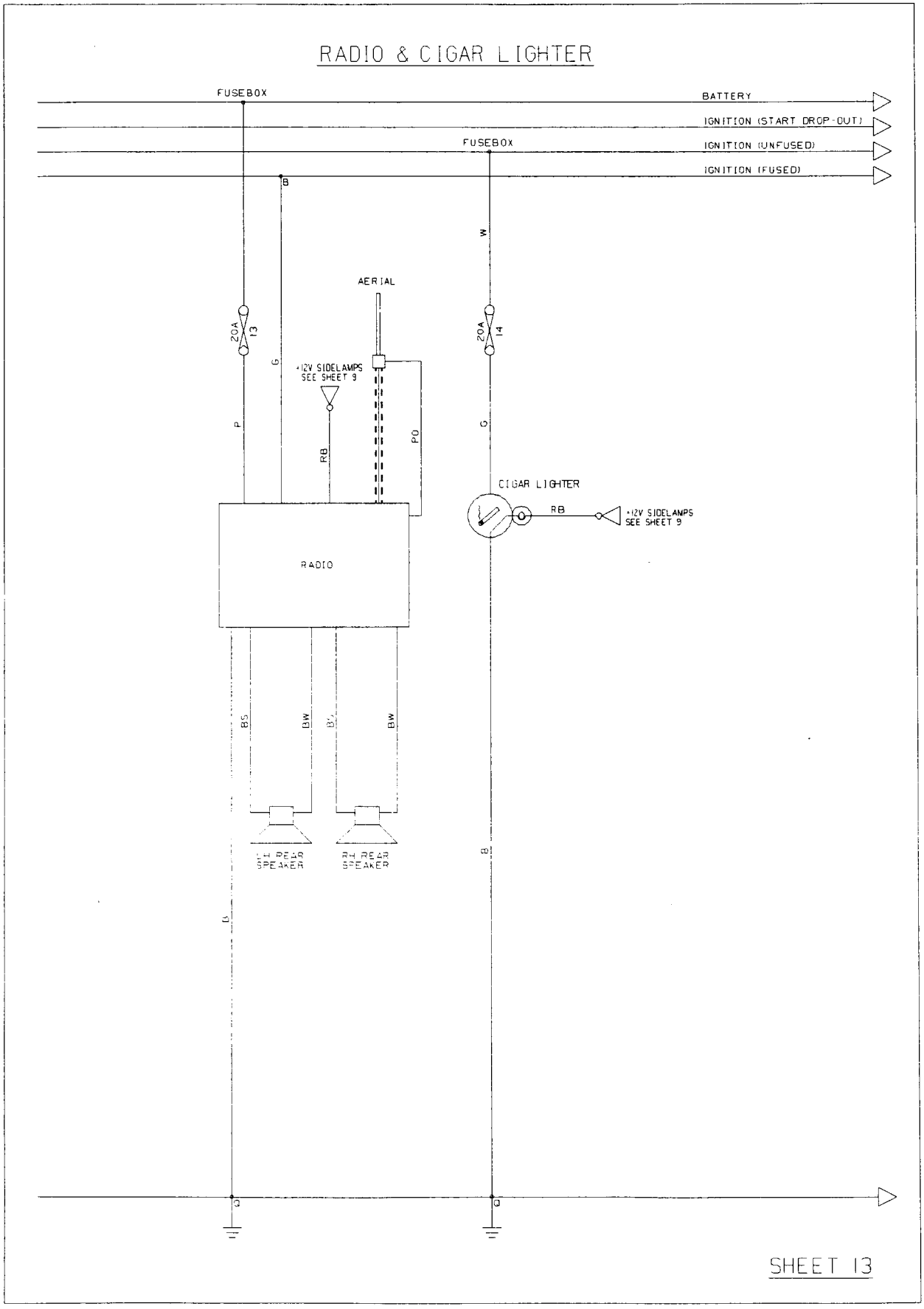
RADIO & CIGAR LIGHTER
FUSEBOX
BATTERY
IGNITION (START DROP-OUT)
FUSEBOX
IGNITION (UNFUSED)
IGNITION (FUSED)
B
W
AERIAL
20A
13
20A
14
G
+12V SIDELAMPS
SEE SHEET 9
P
RB
PO
G
CIGAR LIGHTER
RB
+12V SIDELAMPS
SEE SHEET 9
RADIO
BS
BW
BW
LH REAR
SPEAKER
RH REAR
SPEAKER
B
B
B
SHEET 13

POWER & GROUND STRUCTURE

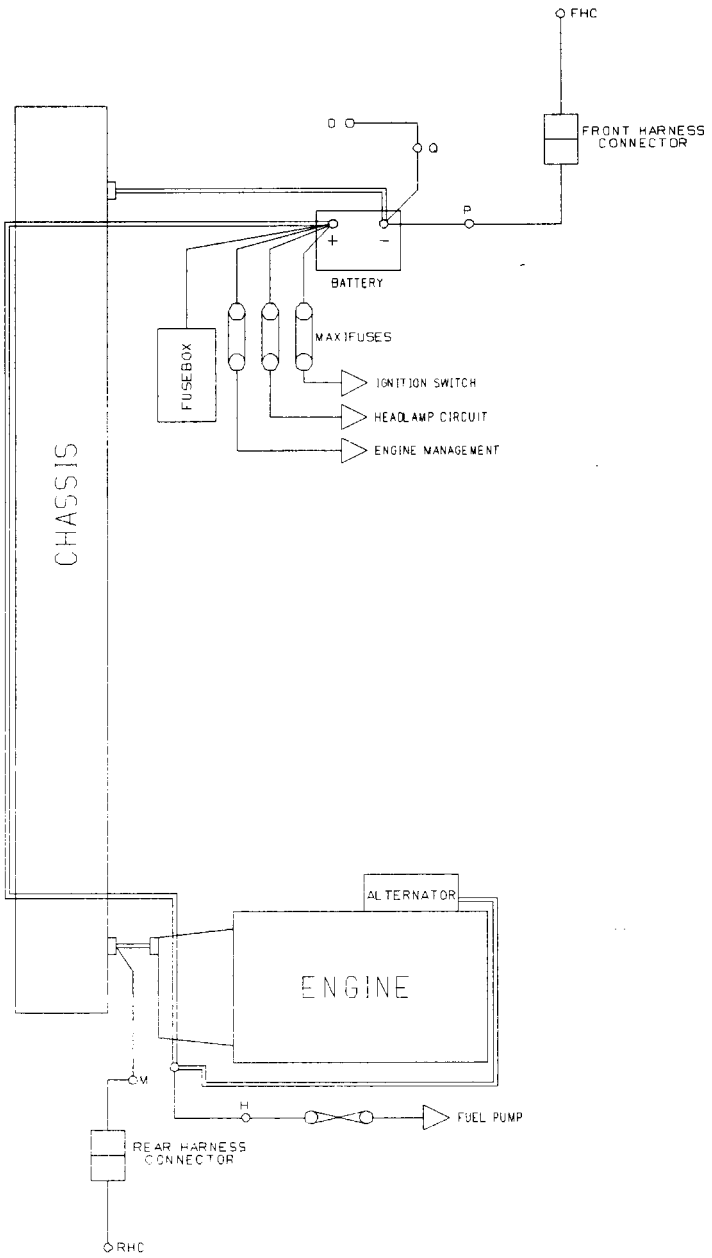

SHEET 14

INTER-HARNESS CONNECTORS

CONNECTOR ON MAIN HARNESS		CONNECTOR ON MATING HARNESS
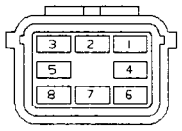	FRONT & REAR HARNESS CONNECTORS (FHC & RHC)	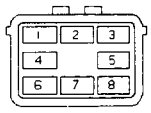
BLUE	ENGINE HARNESS CONNECTOR 1 (EHC 1)	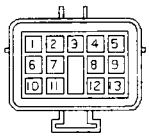 BLUE
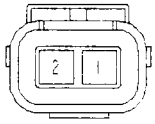	ENGINE HARNESS CONNECTOR 2 (EHC 2)	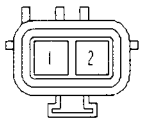
BLACK	ENGINE HARNESS CONNECTOR 3 (EHC 3)	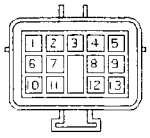 BLACK
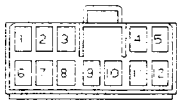	ALARM HARNESS & IMMOBILISER CONNECTORS (AHC & IC)	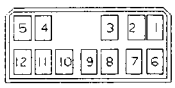

SHEET 15

FUSEBOX A

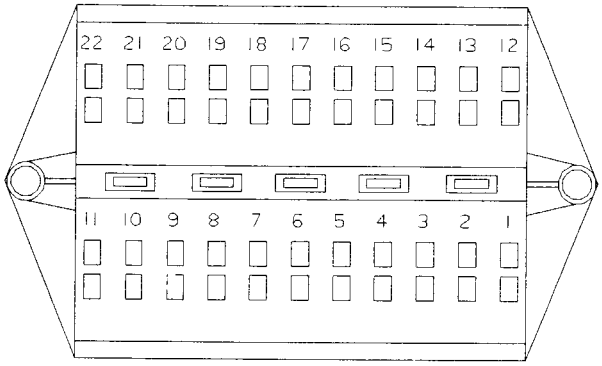

NO.	RATING	APPLICATION	
01	3A	REAR FOG LAMP	
02	2A	ALARM	
03	15A	INTERIOR FAN	
04	15A	WIPER MOTOR	
05	5A	REVERSE LAMP	
06	7.5A	DIRECTION INDICATORS	
07	5A	IGNITION SERVICES	
08	7.5A	STOP LAMPS & BATTERY SERVICES	
09	10A	HAZARD LAMPS	
10	7.5A	HORN	
11	10A	ALARM & INTERIOR LAMP	
12	25A	COOLING FAN	
13	25A	COOLING FAN 2	A/C EQUIPED VEHICLES ONLY
14	20A	RADIO	
15	20A	CIGAR LIGHTER	
16	5A	SIDELAMP LH	
17	5A	SIDELAMP RH	
18	10A	A/C CLUTCH	A/C EQUIPED VEHICLES ONLY
19	5A	HOT SOAK MODULE	A/C EQUIPED VEHICLES ONLY
20	20A	FAST FAN SPEED RELAY	A/C EQUIPED VEHICLES ONLY
21			
22			

FUEL PUMP FUSE

NO.	RATING	APPLICATION
23	20A	FUEL PUMP

MAXI-FUSES

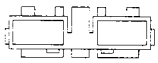

NO.	RATING	APPLICATION
01	50A	IGNITION SWITCH
02	50A	HEADLAMPS

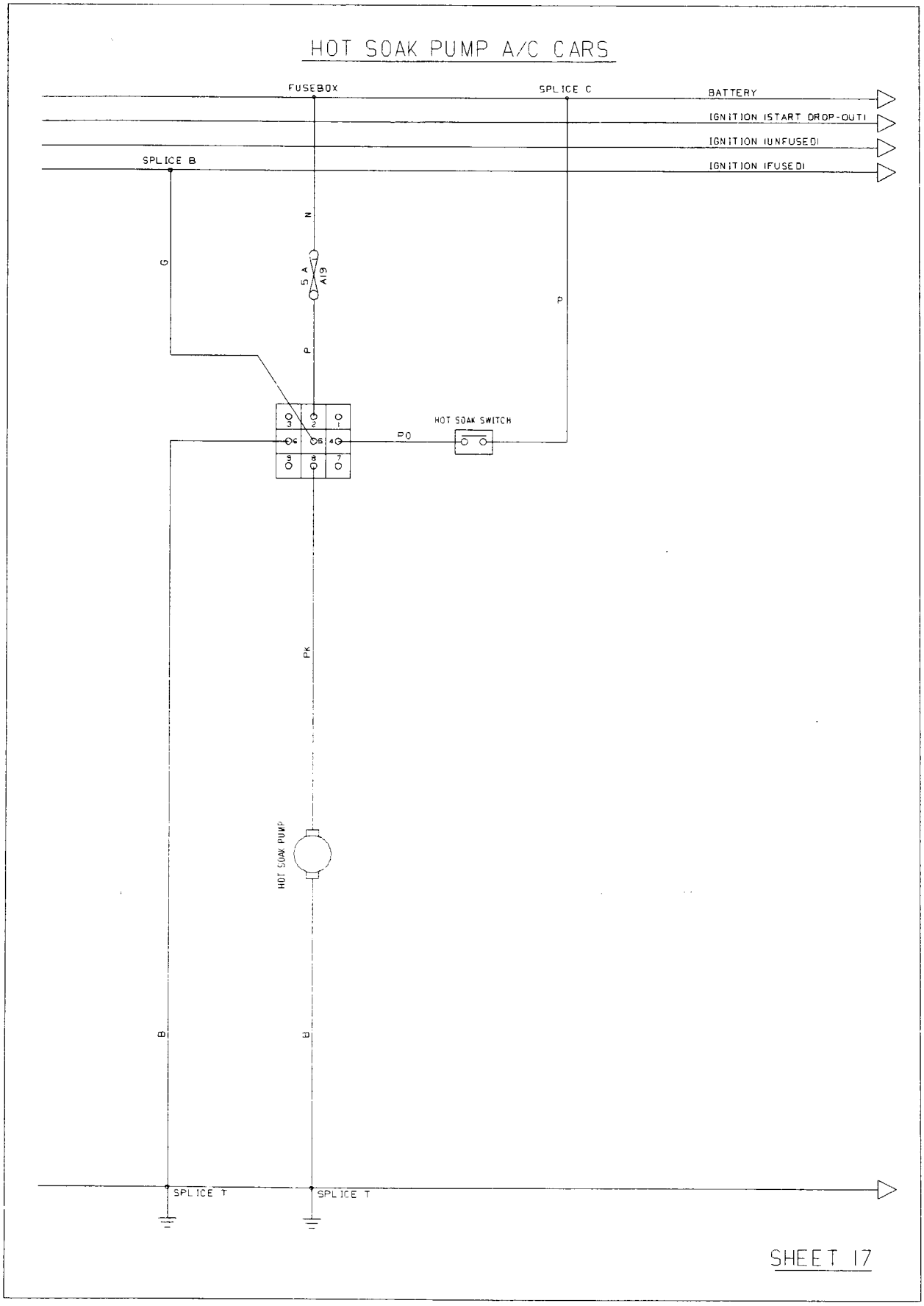
HOT SOAK PUMP A/C CARS
FUSEBOX
SPLICE C
BATTERY
IGNITION (START DROP-OUT)
IGNITION (UNFUSED)
IGNITION (FUSED)
SPLICE B
N
G
5 A
A19
P
HOT SOAK SWITCH
PO
PK
HOT SOAK PUMP
B
SPLICE T
SPLICE T
SHEET 17

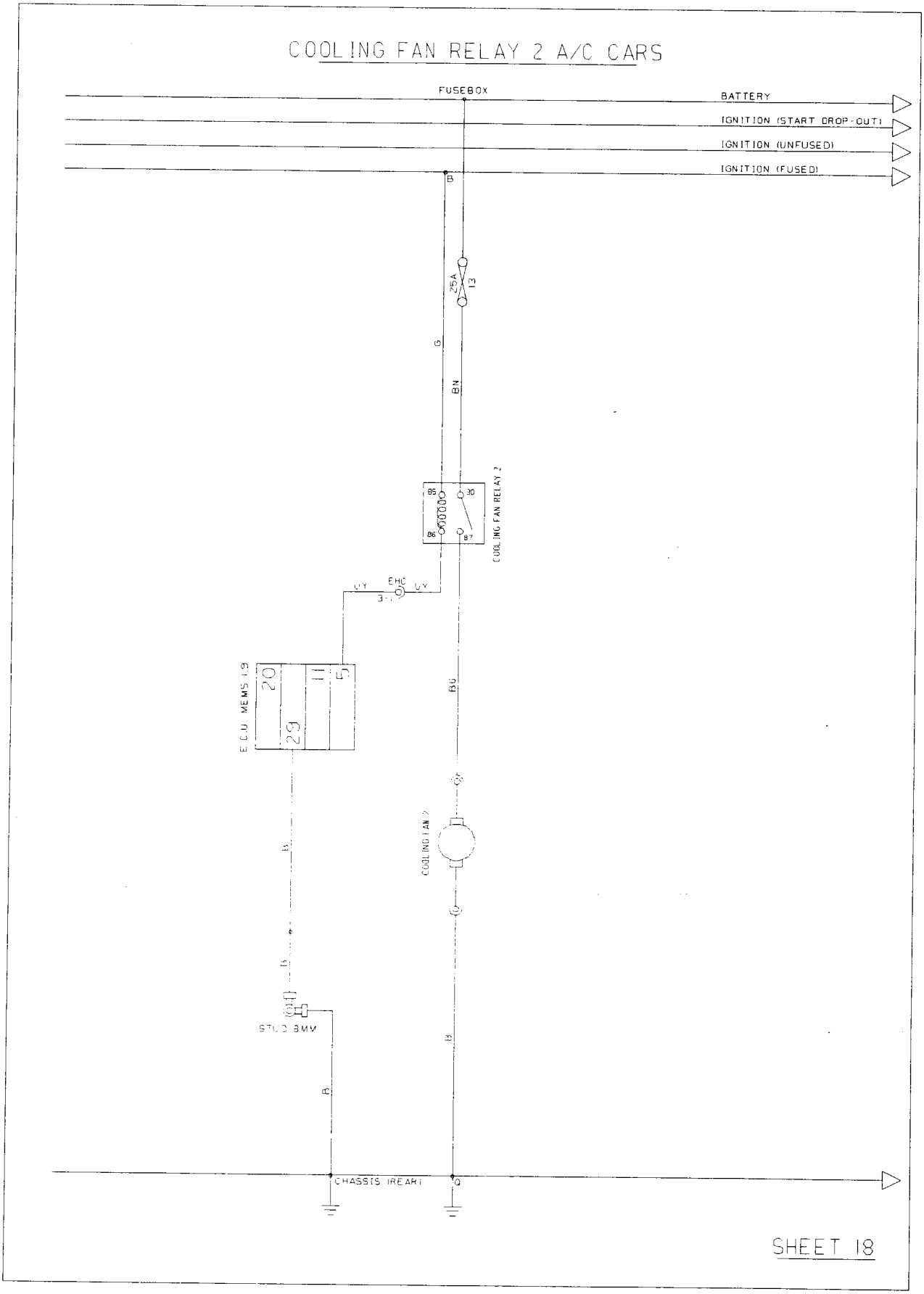
COOLING FAN RELAY 2 A/C CARS
FUSEBOX
BATTERY
IGNITION (START DROP-OUT)
IGNITION (UNFUSED)
IGNITION (FUSED)
25A
13
G
BN
85
30
86
87
COOLING FAN RELAY 2
EHC
UY
UY
ECU MEMS 1.9
20
11
5
29
BG
COOLING FAN 2
B
B
STUD BMW
B
B
CHASSIS (REAR)
SHEET 18

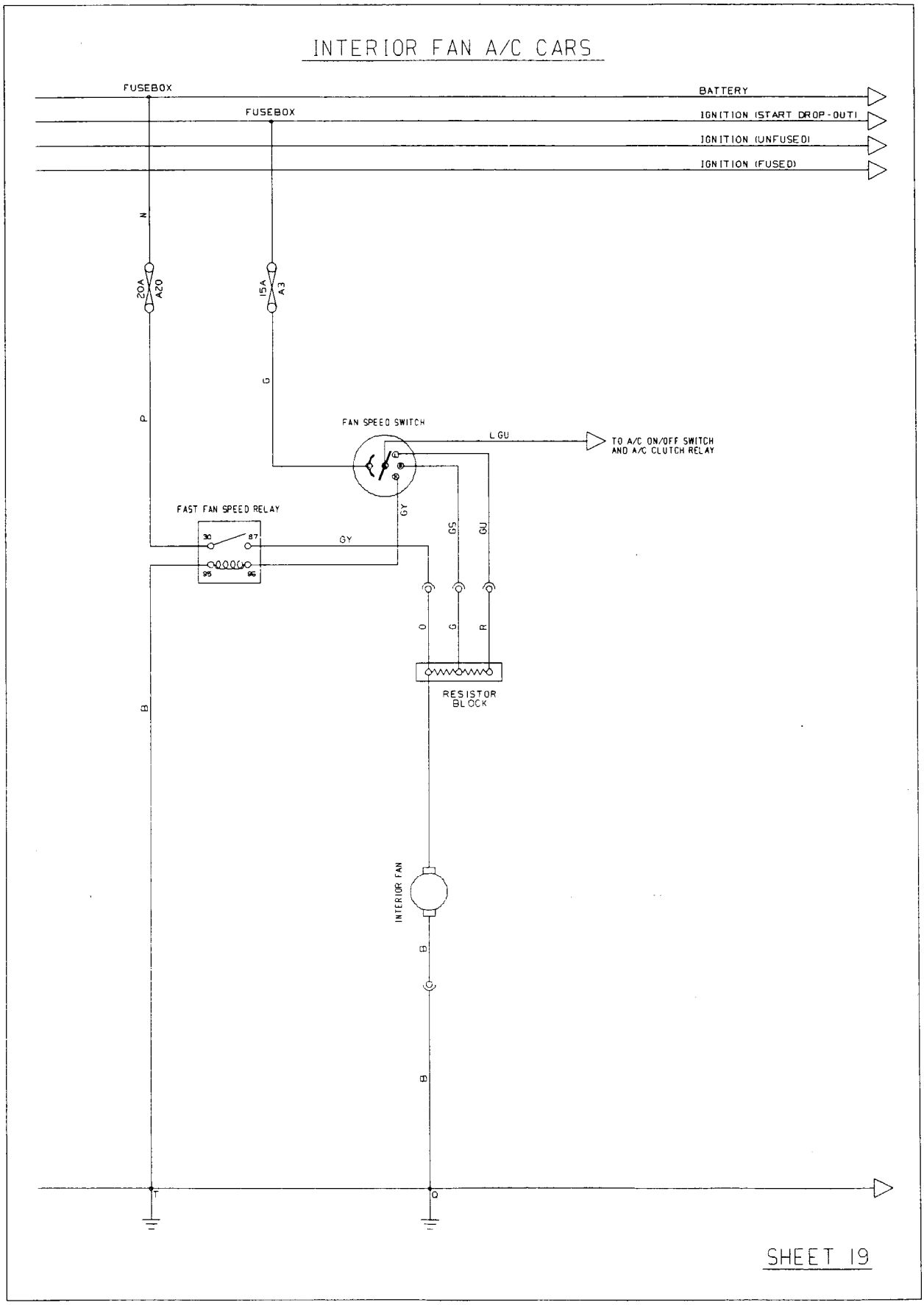
INTERIOR FAN A/C CARS
FUSEBOX
BATTERY
FUSEBOX
IGNITION (START DROP-OUT)
IGNITION (UNFUSED)
IGNITION (FUSED)
N
20A
A20
15A
A3
G
P
FAN SPEED SWITCH
LGU
TO A/C ON/OFF SWITCH
AND A/C CLUTCH RELAY
FAST FAN SPEED RELAY
30
87
85
86
GY
GY
GS
GU
O
G
R
RESISTOR
BLOCK
B
INTERIOR FAN
B
B
T
O
SHEET 19

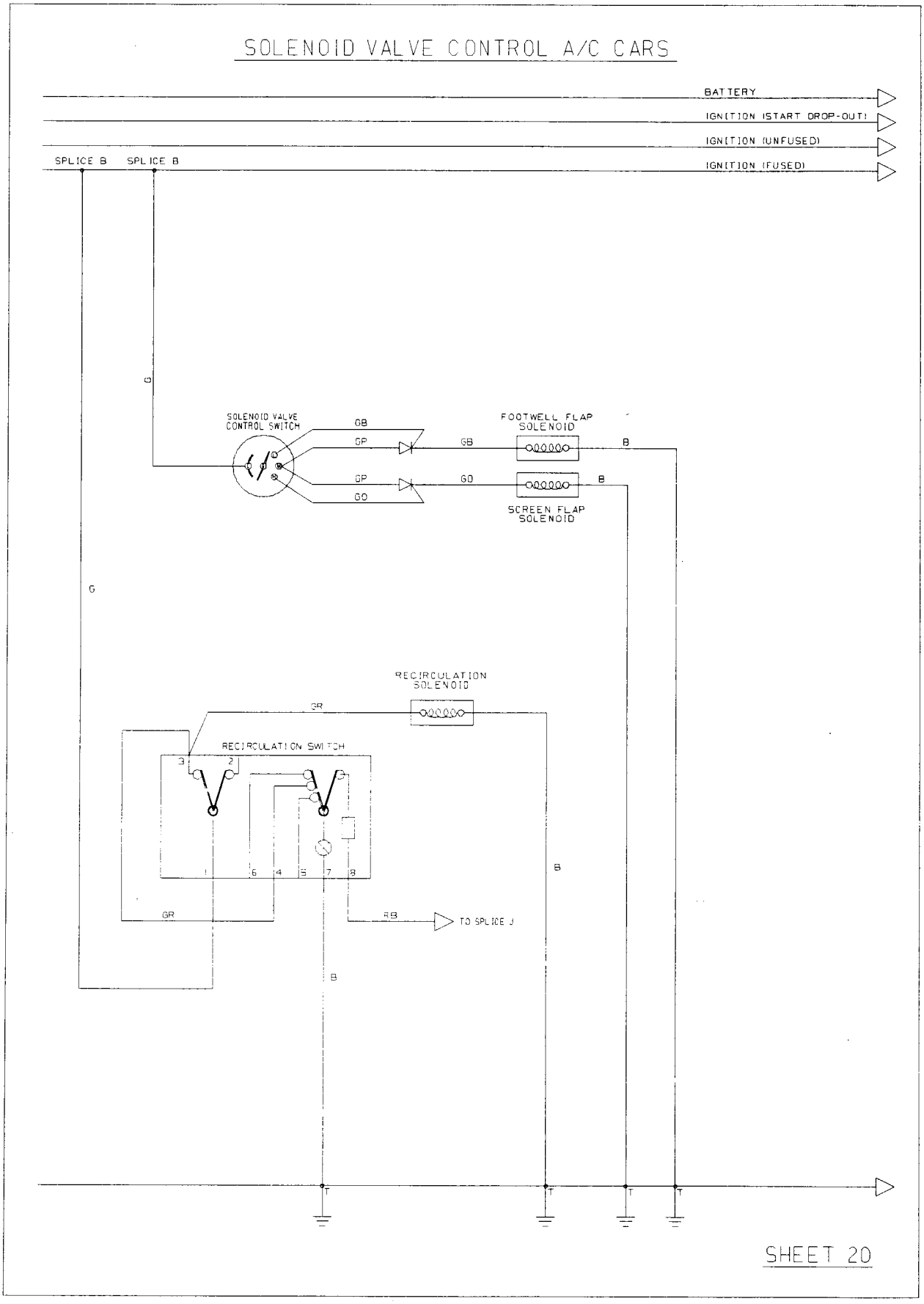
SOLENOID VALVE CONTROL A/C CARS
BATTERY
IGNITION (START DROP-OUT)
IGNITION (UNFUSED)
IGNITION (FUSED)
SPLICE B
SPLICE B
G
SOLENOID VALVE CONTROL SWITCH
GB
GP
GP
GO
GO
GB
GO
FOOTWELL FLAP SOLENOID
SCREEN FLAP SOLENOID
B
B
G
RECIRCULATION SOLENOID
GR
RECIRCULATION SWITCH
3
2
1
6
4
5
7
8
B
GR
RB
TO SPLICE J
B
T
T
T
T
SHEET 20

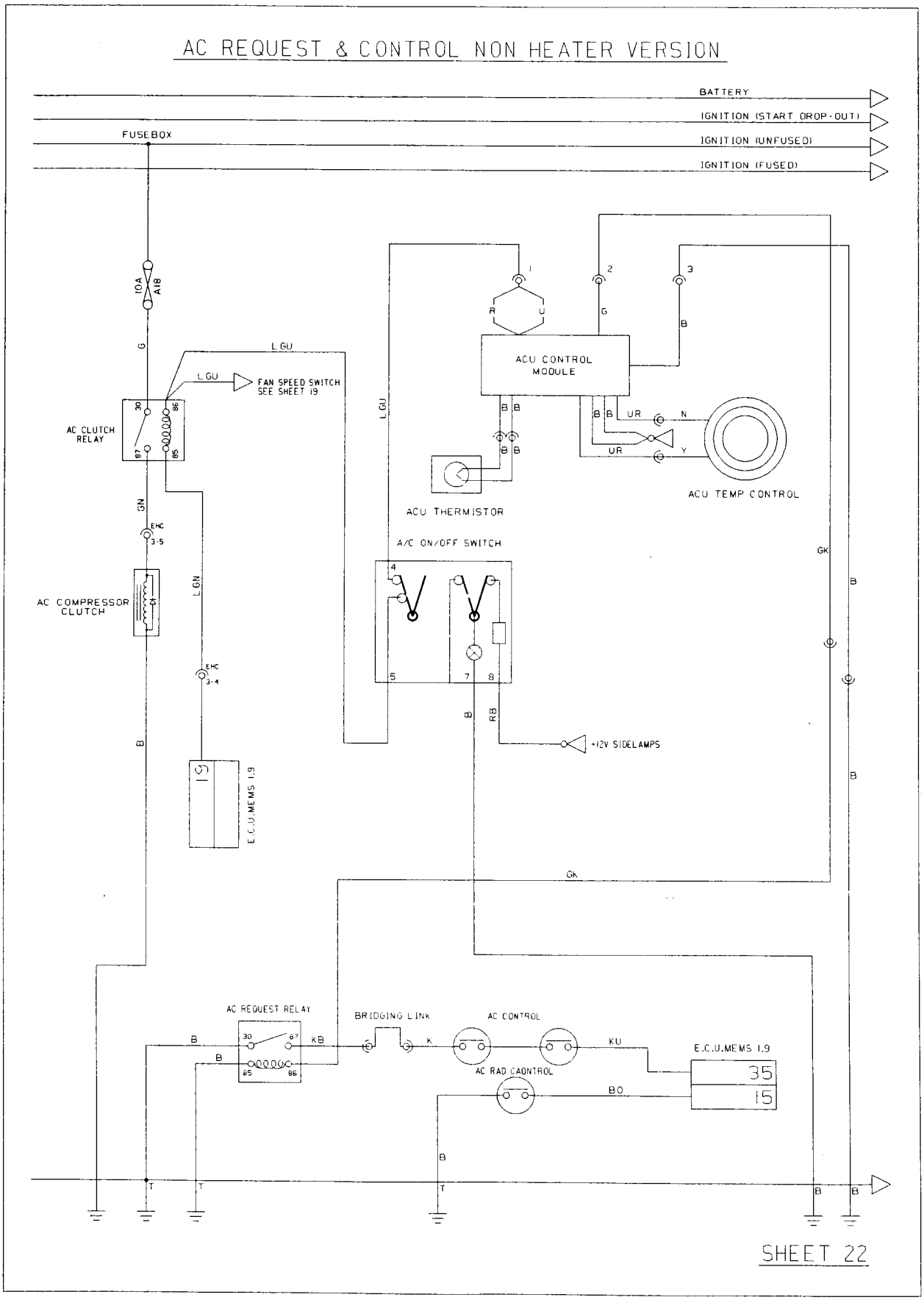
AC REQUEST & CONTROL NON HEATER VERSION
BATTERY
IGNITION (START DROP-OUT)
IGNITION (UNFUSED)
IGNITION (FUSED)
FUSEBOX
10A
A18
G
LGU
LGU
FAN SPEED SWITCH
SEE SHEET 19
AC CLUTCH
RELAY
30
86
87
85
GN
EHC
3-5
AC COMPRESSOR
CLUTCH
LGN
EHC
3-4
B
E.C.U.MEMS 1.9
ACU CONTROL
MODULE
1
2
3
R
U
G
B
LGU
B
B
B
B
B
B
UR
N
UR
Y
ACU THERMISTOR
ACU TEMP CONTROL
A/C ON/OFF SWITCH
4
5
7
8
GK
B
B
RB
+12V SIDELAMPS
B
GK
AC REQUEST RELAY
30
87
85
86
B
B
KB
BRIDGING LINK
K
AC CONTROL
KU
AC RAD CAONTROL
BO
E.C.U.MEMS 1.9
35
15
B
T
T
T
B
B
SHEET 22

MAINTENANCE & LUBRICATION

SECTION OG - M111 ELISE

	Page
Recommended Lubricants	2
Maintenance Schedule	4
Pre-Delivery Inspection	7

RECOMMENDED LUBRICANTS

Engine

In order to ensure the longevity and reliability of the vehicle, it is most important that only the specified lubricants are used. It is an entirely false economy to try to save money by using lower quality oils, which may break down before the next change interval and provide inadequate protection before the end of the term. High oil consumption may also result.

Engine oil should meet Rover specification RES.22.OL.G4 or the European specification CCMC G4, and have a viscosity band recommended for the local ambient temperature range, as shown in the following chart. Where oils to these standards are not available, reputable brands meeting American specification API SG or SH should be used.

Note that the viscosity rating is made up of two numbers; the first, identified by a 'W' suffix is the winter (or low temperature) viscosity grade, and the second number the summer or high temperature viscosity grade. i.e. a 20W/50 oil performs like an SAE 20 oil at low temperature and an SAE 50 oil at high temperature.

Engine Oil Viscosity Chart

Viscosity	Ambient Temperature Range							
5W/20								
5W/30								
5W/40								
5W/50								
10W/30								
10W/40								
10W/50								
15W/40								
15W/50								
20W/40								
20W/50								
°C	-30	-20	-10	+10	+20	+30	+40	+50
°F	-20	-5	+5	+30	+50	+70	+85	+120

Capacity - refill inc. filter	4.5 litre (7.9 imp.pt)
- dry inc. filter	5.0 litre (8.8 imp.pt)
Difference between high & low dipstick marks	1.0 litre (1.8 imp.pt)
Oil change interval	9,000 miles (15,000 km)

Transmission (gearbox & final drive)

Only specified lubricant	Texaco MTF 94 (A111F6017V)
Capacity - refill	2.1 litre (3.7 imp.pt)
- dry	2.4 litre (4.2 imp.pt)
Oil change interval	Filled for life

Brake & Clutch System

Type	Non-mineral (non-petroleum) hydraulic fluid
Specification	DOT 4
Capacity - brake	1.5 litre
- clutch	0.5 litre
Fluid change interval	12 months

Engine Coolant Additive

Type	Unipart Super Plus Anti-Freeze & Summer Coolant
Concentration	50%
System capacity	8.0 litre
Coolant change interval	24 months

MAINTENANCE SCHEDULE - M111 ELISE

LSL348B

Date: ..... Owner's Name: ..... Vehicle: .....

Vehicle Registration No.: ..... V.I.N.: .....

Recorded Mileage: ..... Months Since Last Service: ..... Job No.: .....

EXPLANATORY NOTES:

Required Maintenance

In order to maintain warranty validation and help ensure proper safety, emissions performance and dependability of the vehicle, Lotus Cars Ltd. requires that the vehicle be serviced in accordance with this schedule. Each service should be performed either within 1,000 miles (1,600 km) of the distances stipulated, or within one month of the anniversary of the previous service. whichever first occurs. Any necessary repairs should be completed without delay.

A cross (X) in the following table indicates an operation to be performed. The corresponding box should be ticked (✓) when the operation has been satisfactorily performed, or the X circled if extra work and time is required. The approval of the customer should be obtained before any extra work is undertaken, details of which should be recorded in the space provided at the end of the schedule.

After Sales Service

There is no charge to the vehicle owner for the labour content of the After Sales Service. Only materials used will be charged.

'Inspect' means assess condition and test for correct operation. Extra time is required to adjust or repair - advise customer beforehand if necessary.

'Check' means test and adjust/fill or tighten as necessary. Labour time is included.

Odometer Reading	*Time Period*	*Service Type*
1,000 to 1,500 miles (1,500 to 2,500 km)	To be performed within 12 months of vehicle date of sale.	After Sales Service.
9,000 miles (15,000 km)	Or 12 months since last service.	A
18,000 miles (30,000 km)	" " " " " "	A
27,000 miles (45,000 km)	" " " " " "	B
36,000 miles (60,000 km)	" " " " " "	A
45,000 miles (75,000 km)	" " " " " "	A
54,000 miles (90,000 km)	" " " " " "	C
63,000 miles (105,000 km)	" " " " " "	A
72,000 miles (120,000 km)	" " " " " "	A
81,000 miles (135,000 km)	" " " " " "	B
90,000 miles (150,000 km)	" " " " " "	A
99,000 miles (165,000 km)	" " " " " "	A
108,000 miles (180,000 km)	" " " " " "	C

Op No.	OPERATION DESCRIPTION	SERVICE TYPE				
		After Sales	A	B	C	Other Intervals
1	Fit protective covers to seats, footwells, steering wheel & rear body	X	X	X	X	
	Lubrication					
2	Renew engine oil & filter*	X	X	X	X	
3	Inspect engine & transmission for oil leaks	X	X	X	X	
4	Check transmission oil level		X	X	X	
	* In 'severe service' conditions (dusty areas, or cold, stop/start driving), change twice as frequently or as required.					
	Engine					
5	Renew air cleaner element* (refer above)			X	X	
6	Renew spark plugs			X	X	
7	Inspect auxiliary drive belt condition		X	X	X	
8	Renew cam belt				X	
9	Renew fuel filter				X	
10	Connect 'Lotus Check' scanner tool and run Pre-Test	X	X	X	X	
11	Inspect & record tailpipe CO		X	X	X	
	Cooling System					
12	Inspect radiator, hoses & pipework for damage or leaks. Clean radiator finning		X	X	X	
13	Check coolant level	X	X	X	X	
14	Renew coolant					12 months
	Braking System					
15	Inspect parking brake adjustment	X	X	X	X	
16	Inspect operation of brake tell tales	X	X	X	X	
17	Inspect brake pad thickness & disc condition ^		X	X	X	
	^ In conditions where the brakes are subject to heavy use, inspection may be required more frequently					
18	Inspect brake hoses, pipes & hydraulic units		X	X	X	
19	Check brake fluid level	X	X	X	X	
20	Renew brake/clutch fluid					12 months
	Steering & Suspension					
21	Check security and condition of front & rear suspension		X	X	X	
22	Inspect dampers for leaks & performance		X	X	X	
23	Inspect front & rear wheel bearings for play		X	X	X	
22	Inspect condition of driveshaft gaiters		X	X	X	
23	Inspect steering ball joints & gaiters		X	X	X	
25	Inspect free play at steering wheel		X	X	X	

Continued.....

i:\service\table\sn_og_t2.eps

Op No.	OPERATION DESCRIPTION	SERVICE TYPE				
		After Sales	A	B	C	Other Intervals
	Wheels & Tyres					
27	Inspect tyre condition & set pressures	X	X	X	X	
	Electrical					
28	Check battery terminals for security & condition		X	X	X	
29	Inspect operation of all lights		X	X	X	
30	Inspect operation of all electrical equipment		X	X	X	
	Body					
31	Check adjustment of hinges & latches. Lubricate door check plate	X	X	X	X	
32	Inspect operation & condition of seat belts		X	X	X	
33	Top up screenwash reservoir	X	X	X	X	
34	Renew alarm transmitter batteries (check with customer)					24 months

Road Test Performance

Engine performance ..... Tailpipe CO .....

Clutch operation ..... Gearbox operation .....

Brake performance ..... Steering performance .....

Driveline & suspension noise/vibration ..... Wheel balance .....

General comments.....

Additional work required .....

.....

.....

.....

.....

Work completed by .....

Recommended Service Times

After Sales Service: 1.3 hr
A Service: 2.3 hr
B Service: 2.7 hr
C Service: 6.2 hr
(Add 0.5 hr to all if undershield fitted)

Dealer stamp:

Date:

i:\service\table\sn_og_t3.eps

PRE-DELIVERY INSPECTION - ESPRIT V8 & ELISE

LSL345

Model: ..... Colour: ..... V.I.N.: ***S C C*** _ _ _ _ _ _ _ _ _ _ _ _ _ _ _

OPERATION	Esprit	Elise
Fit protective covers to seats, footwells & steering wheel	X	X
Engine Bay		
Check engine & transmission oil levels	X	X
Check security of engine oil filter	X	X
Check coolant level	X	X
Check power steering fluid levels	X	
Start Engine		
Check engine & transmission for oil leaks	X	X
Check cooling system for leaks	X	X
Check power steering system for leaks	X	
Use 'Tech 1' tool to check data list & for stored codes	X	
Fuel Tank		
Completely fill fuel tank and check for leaks	X	X
Wheels & Tyres		
Check cold tyre pressures, inc. spare (if fitted)	X	X
Check torque of wheel bolts	X	X
Electrical		
Check security of battery terminals	X	X
Check operation of all exterior & interior lamps	X	X
Check operation of headlamp pods	X	
Check headlamp alignment	X	X
Check operation of horn(s) & hazard switch	X	X
Check wiper operation at all speeds & park position	X	X
Check washer operation, jet alignment & reservoir level	X	X
Check operation of all instruments & set time clock	X	X
Reprogramme door window switches	X	
Check operation of heater/air conditioning and blower fan	X	X
Check operation of door mirror controls & heaters	X	
Check operation of audio equipment	X	X
Body		
Check brake & clutch fluid levels	X	X
Check operation of doors, door locks & central locking (if fitted)	X	X
Check adjustment & operation of tailgate & fuel filler flap release	X	
Check adjustment of front bonnet & release mechanism	X	
Check soft top roof erection & stowage		X
Check operation of seat belts	X	X
Check interior trim for damage and cleanliness	X	X
Check all paintwork for damage	X	X
Check presence of jack, wheelbrace, toolkit & literature pack (as applicable)	X	X
Road Test & Valet		
Carry out road test report overleaf	X	X
Carry out full vehicle valet	X	X

i:\service\table\sn_pdi.eps

Esprit Front Spoiler Lip
The two part front spoiler lip is supplied in the luggage compartment complete with fixings. The lip is fitted between the oil cooler undershields and the spoiler: Remove the 4 fixings from each undershield and insert the spoiler lip. Refit the M6 fixings and secure the remainder of each lip with the 4 Scrivets supplied, using the pre-drilled holes in the spoiler.

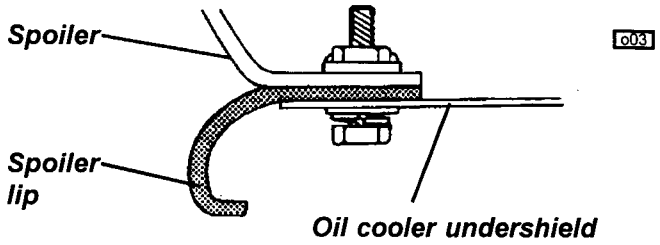

Front Licence Plate
When fitting the front licence plate, in order to ensure that airflow to the radiator is not unduly restricted, the bottom edge of the plate should be aligned with the plinth on both Esprit and Elise models.

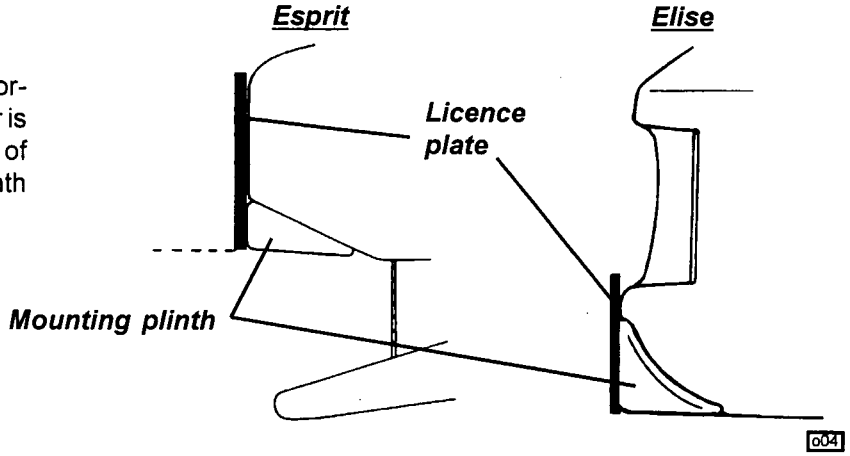

Road Test Performance

Engine performance ..... Brake performance .....

Clutch operation ..... Gearbox operation .....

Steering performance ..... Wheel balance .....

Driveline & suspension noise/vibration .....

General comments.....

Additional work required .....

.....

Work completed by .....

Notes

The PDI is subject to the following conditions:

a) It is the responsibility of the supplying dealer to ensure that the car is delivered to the customer in the best possible condition.

b) All costs incurred during the inspection are the responsibility of the supplying dealer.

c) Failure to return a signed copy of this inspection to Lotus Cars Ltd. by the dealer, may result in warranty claims on the particular car being rejected.

Dealer stamp:

Dealer signature: .....

Date: .....

HEATING & VENTILATION

SECTION PF - M111 ELISE

	Sub-Section	Page
General Description	PF.1	2
Control Cables	PF.2	4
Heater Matrix & Blower Fan Unit	PF.3	7

PF.1 - GENERAL DESCRIPTION

The principal components of the heater/ventilation system comprise a heater matrix unit, incorporating an air blend flap, a blower fan, a diverter flap assembly, and four fascia outlet vents. The system provides heated or ambient air to the fascia vents or footwells, via a simple 2-slider control on the fascia, together with a four speed blower fan selector switch. Airflow from each of the fascia outlet vents may be individually adjusted for volume and direction by direct manipulation of the vent, and may be optimised for either windscreen demisting or face level ventilation.

Air for the ventilation system is taken from the radiator air intake duct, via open ends in two of the 'crush tubes' in the composite crash structure bonded to the front of the chassis. A pair of holes in the chassis front crossmember mate with these tubes and admit air into the heater unit on either side of the heater matrix. The heater matrix is a water/air heat exchanger mounted vertically in a plastic moulding housed in the space between the front ends of the chassis rails in the front services compartment, and is fed with engine coolant at all times (no water valve is used) from the cylinder head outlet pipe. Water returns to the engine via a water rail running around the back and left hand sides of the engine. Water is carried from and to the engine bay, by aluminium pipes clipped to the outboard sides of the chassis side rails.

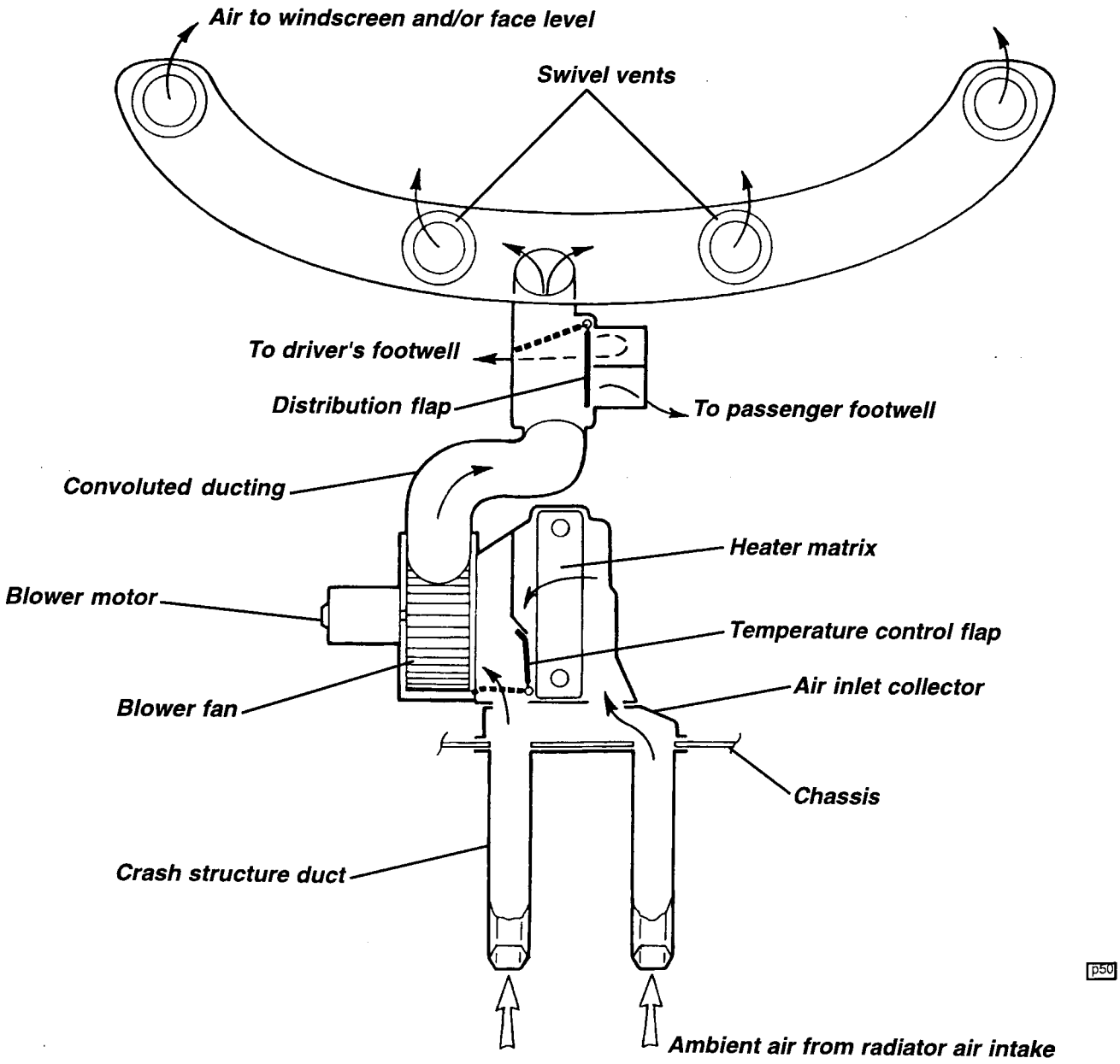

Heater Circuit

k59

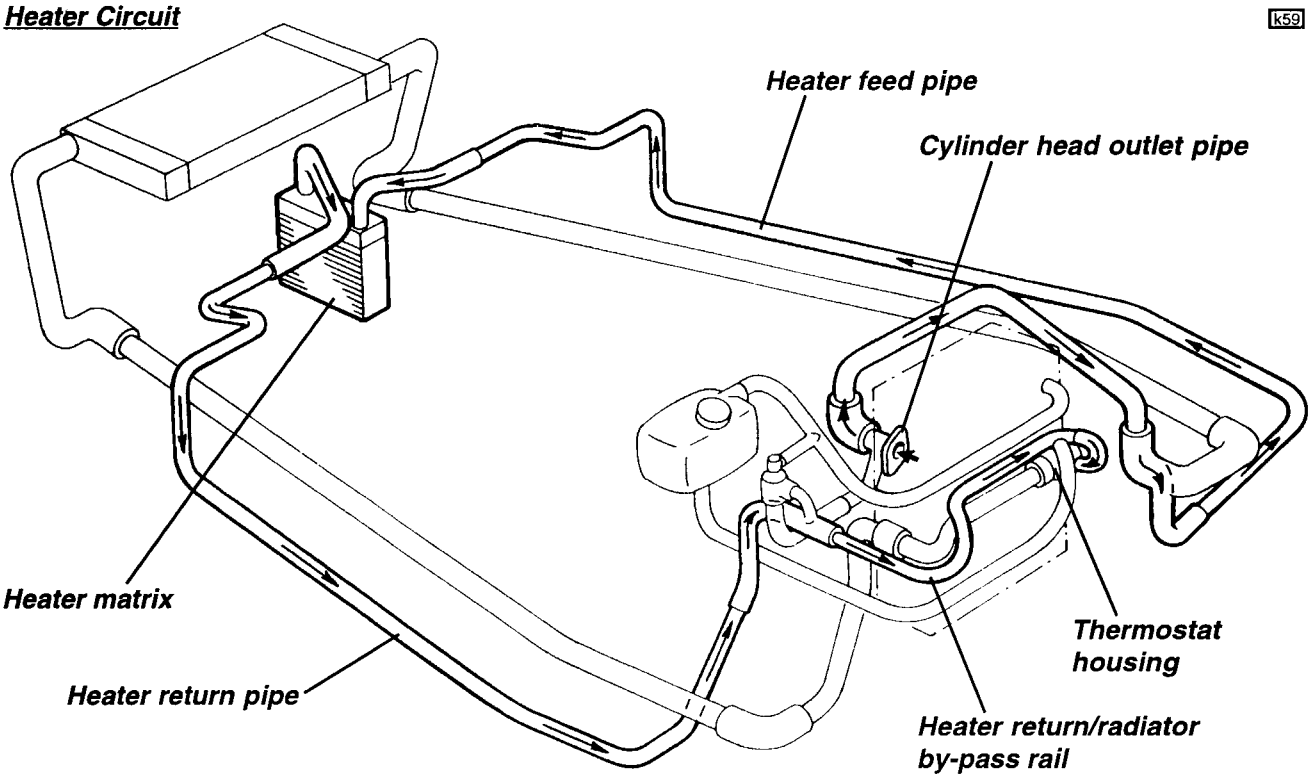

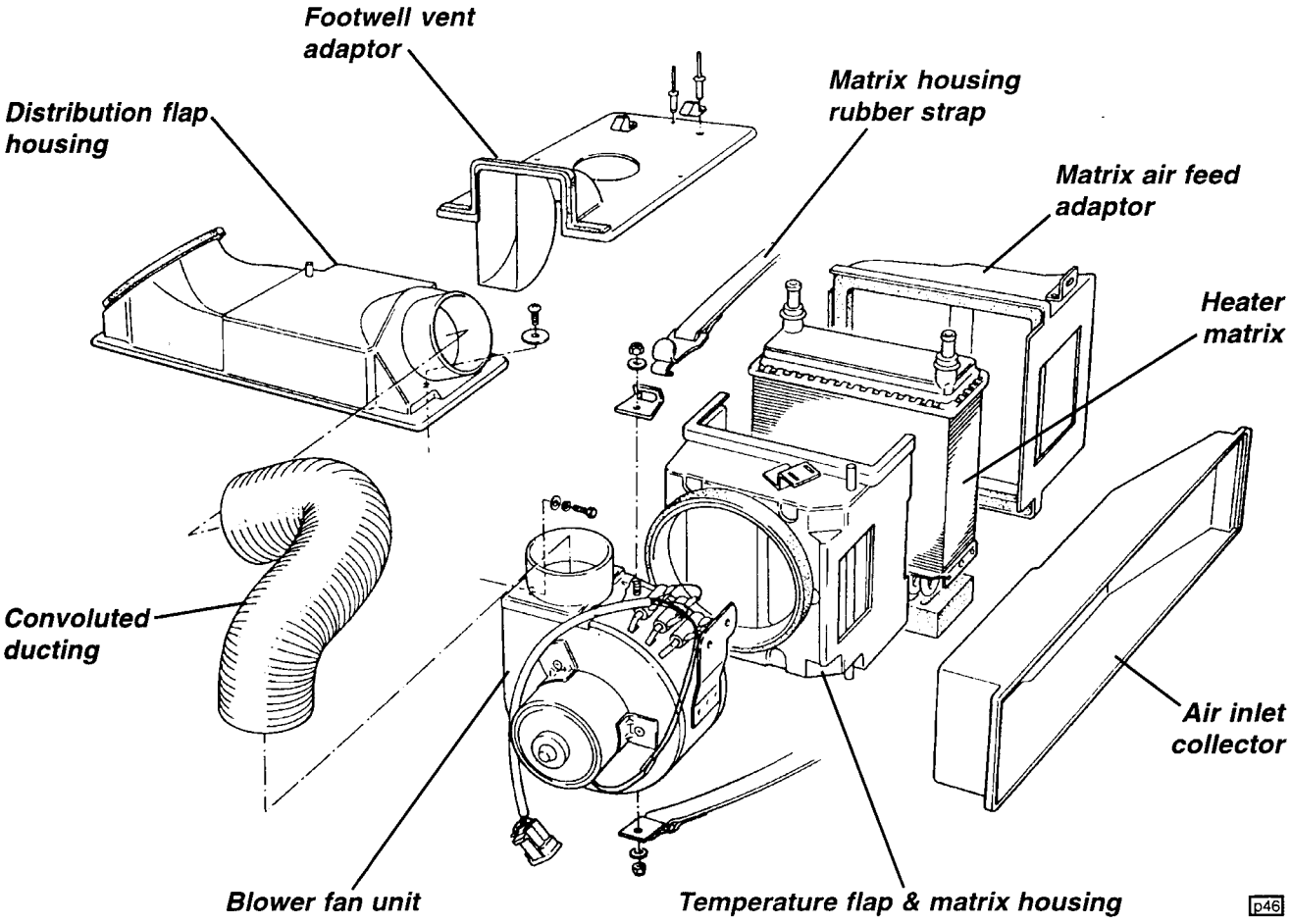

p46

A cable operated 'air blend' temperature control flap, operates between a heater matrix outlet doorway, and a matrix by-pass port, and controls the proportion of hot and cold air supplied to the blower fan unit. The blower fan is mounted alongside the heater, and centrifuges air admitted into the inside of the 'drum' fan, into a convoluted air duct leading to the diverter flap assembly mounted on the scuttle. The diverter flap has a vertical pivot and is cable operated to control the proportion of air flowing to the footwells and fascia vents, via a divided aperture in the scuttle (footwell vents), and a duct moulded into the underside of the fascia top which supplies all four fascia vents.

PF.2 - CONTROL CABLES

For access to the heater controls and input end of the cables, the dash panels must be dismantled:

1. Release the four screws securing the steering column shroud upper section, turning the steering wheel as necessary to permit access.

2. Pull out the grommet from around the ignition switch, and remove the three screws securing the lower shroud to the column.

3. Squeeze the dash panel centre plastic moulding, top to bottom, and pull out from the dash centre extrusion.

4. Release the three screws securing the dash top and centre extrusions to support legs on the fascia top, and unclip the panel from the fascia. Note the two spring steel clips used along the top edge of the dash top extrusion to inhibit rattles.

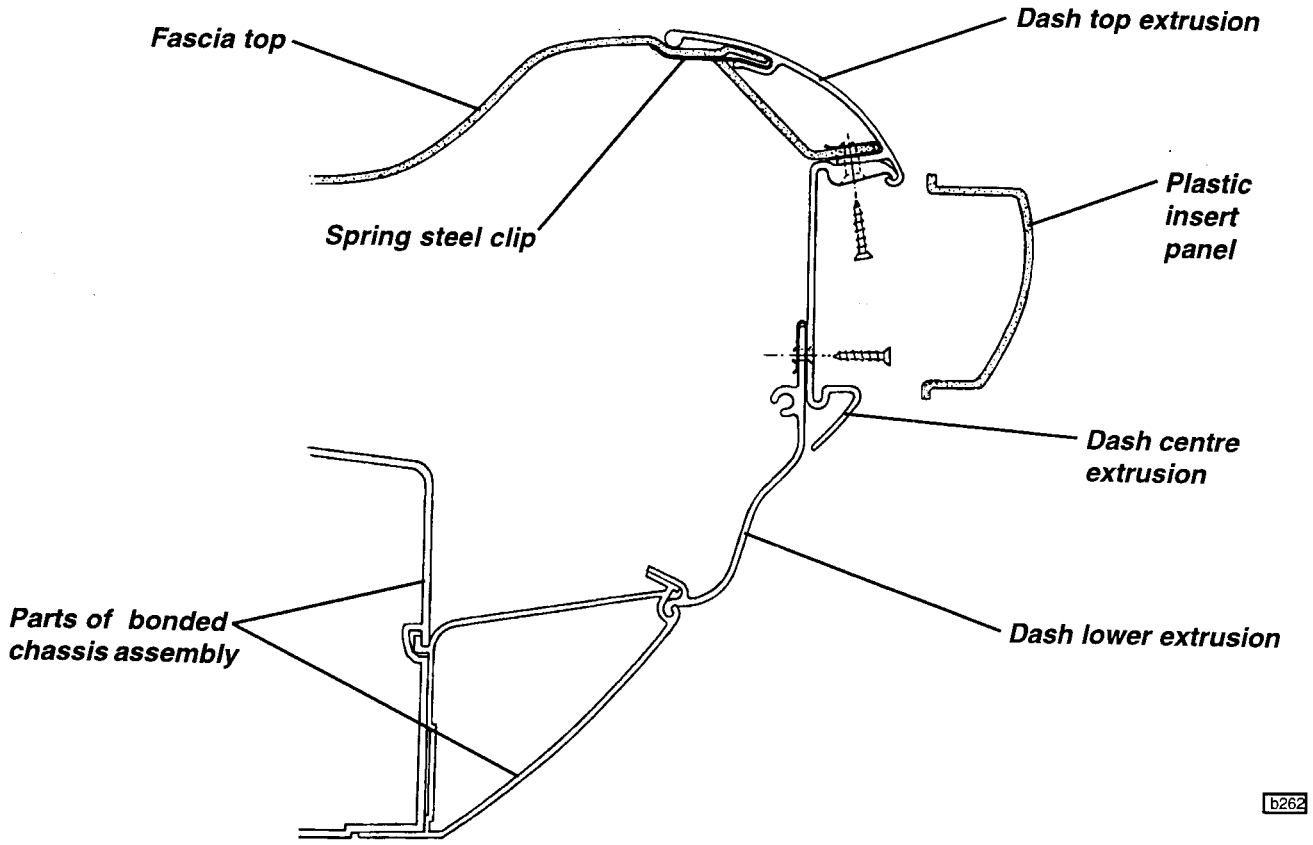

5. Two identical slider control lever assemblies are used for the heat and distribution functions, each being secured to the dash with two countersunk screws and nuts, with the screw heads concealed by a graphic strip. The ends of the solid wire inner control cables are joggled, and are hooked into a hole in the control lever, with the outer cable clamped to the baseplate with a barbed spring steel clip. A similar arrangement is used at the output end of the cable, which connects to the heater or distribution flap spindle via a lever with a boss and grub screw. The lever is equipped with three holes for use in different applications.

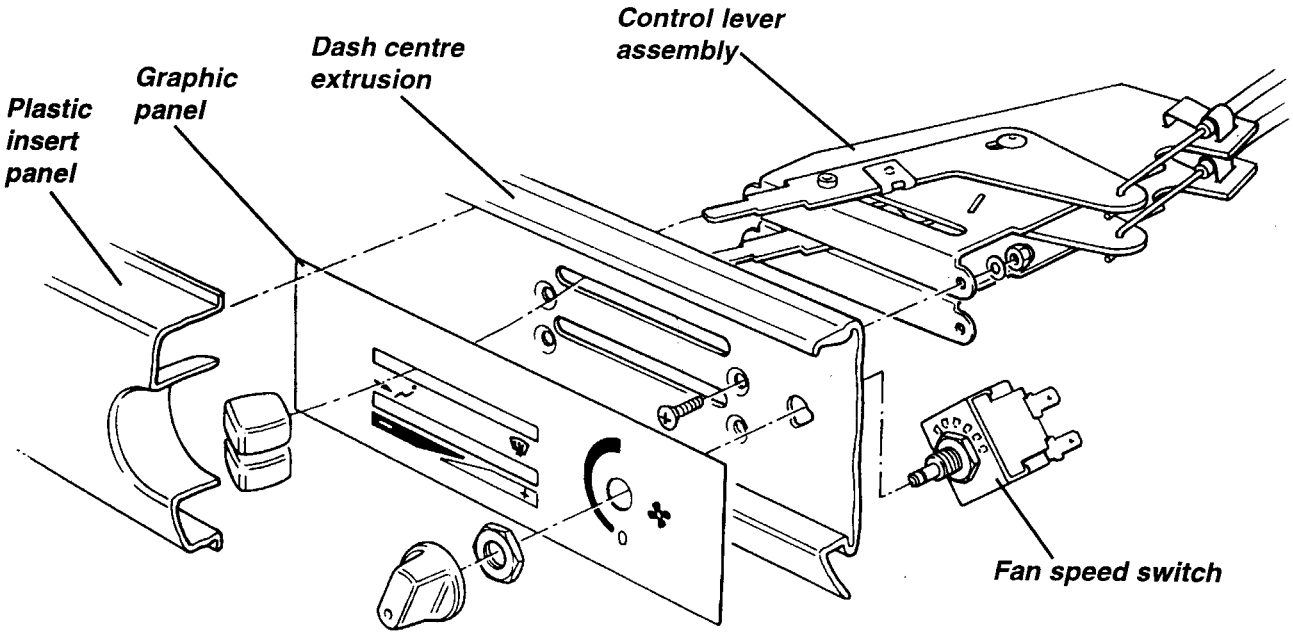

p47

6. The heat control cable runs forward through the scuttle blanking panel and down to the heater matrix housing in the chassis front well. Hook the inner cable into the outermost hole in the temperature flap lever, and with the temperature selector lever positioned at 'hot', ensure that the flap is in the fully hot position (counterclockwise on RHD, clockwise on LHD) before tightening the operating lever grub screw onto the flap spindle, and clamping the outer cable with the spring steel clip.

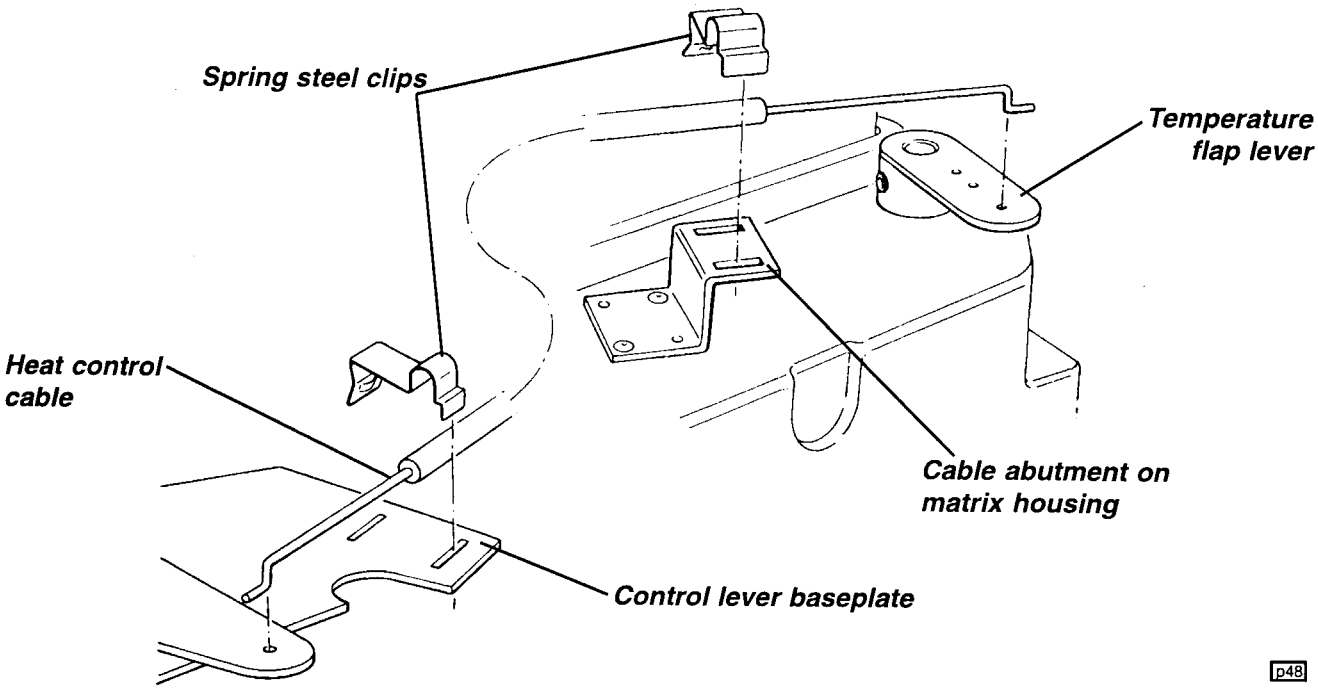

p48

7. The distribution control cable runs from the upper selector lever to the bottom of the flap spindle on RHD cars, and to the top of the flap spindle on LHD cars:
RHD cars: Access to the distribution flap lever is available from within the passenger footwell. With the selector lever at defrost, the flap spindle should be turned fully clockwise when viewed from beneath, and the cable hooked into the middle hole in the lever. Position the lever on the spindle and clamp the outer cable to allow full flap movement to be obtained.

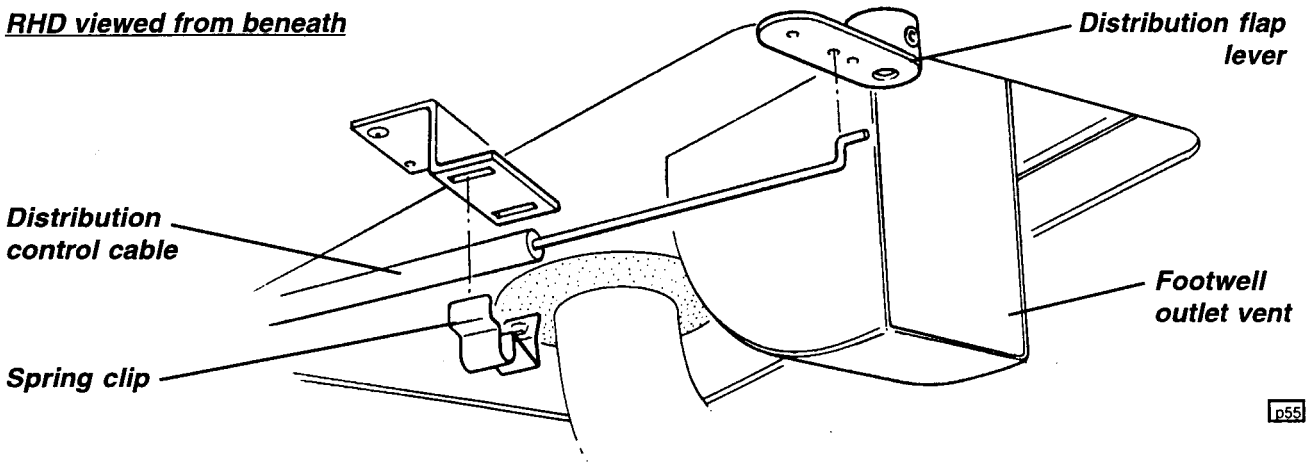

LHD cars: The cable connects to the top end of the flap spindle, with access improved by the removal of the wiper mechanism. With the selector lever at defrost, the flap spindle should be turned fully clockwise and the cable hooked into the hole nearest the spindle. Position the lever on the spindle and clamp the outer cable to allow full flap movement to be obtained.

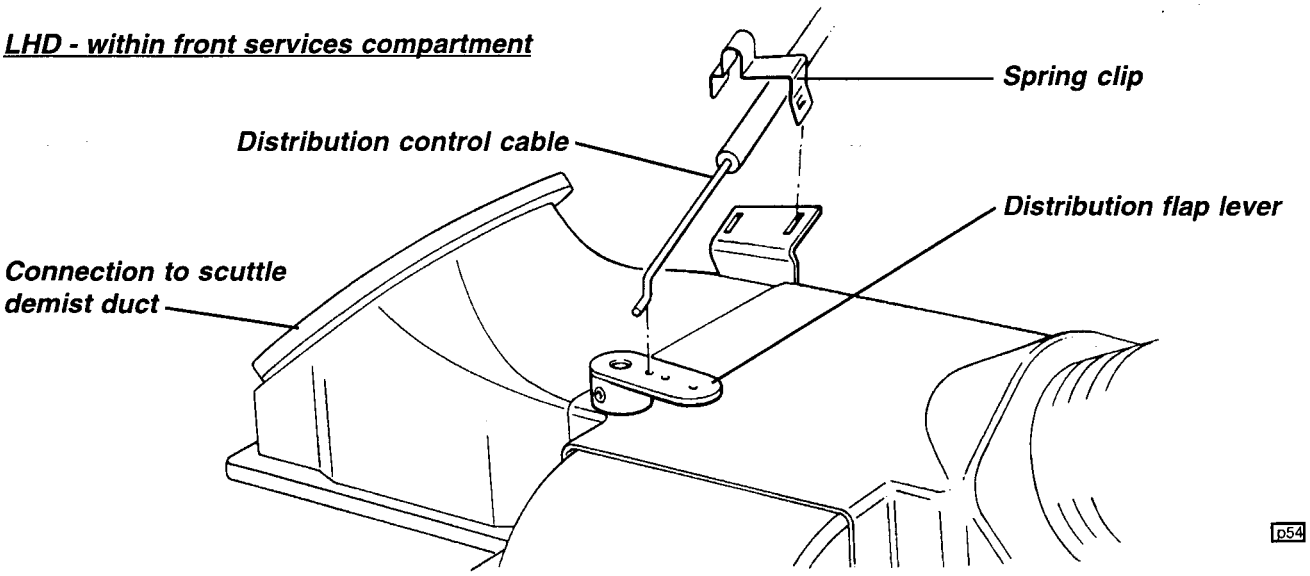

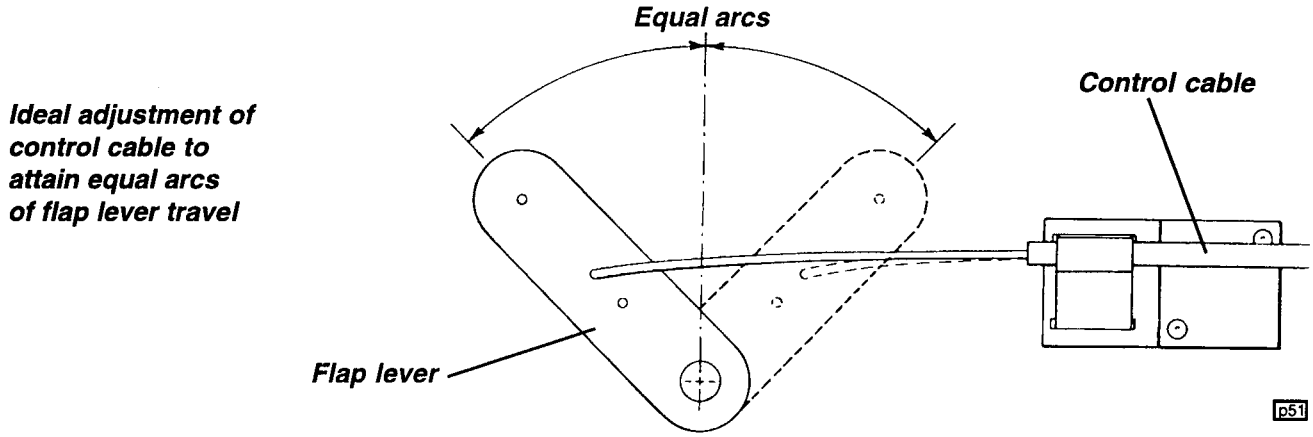

PF.3 - HEATER MATRIX & BLOWER FAN UNIT

The heater matrix is sandwiched between two plastic mouldings and is clamped to the blower fan unit by a rubber strap. The complete assembly is secured via thread inserts in the chassis front well by two screws through a bracket on the front of the fan unit, and a single screw through the fan casing at the rear, accessible after removing the outlet ducting. An additional screw secures the heater matrix inlet moulding via a bracket on the top front edge.

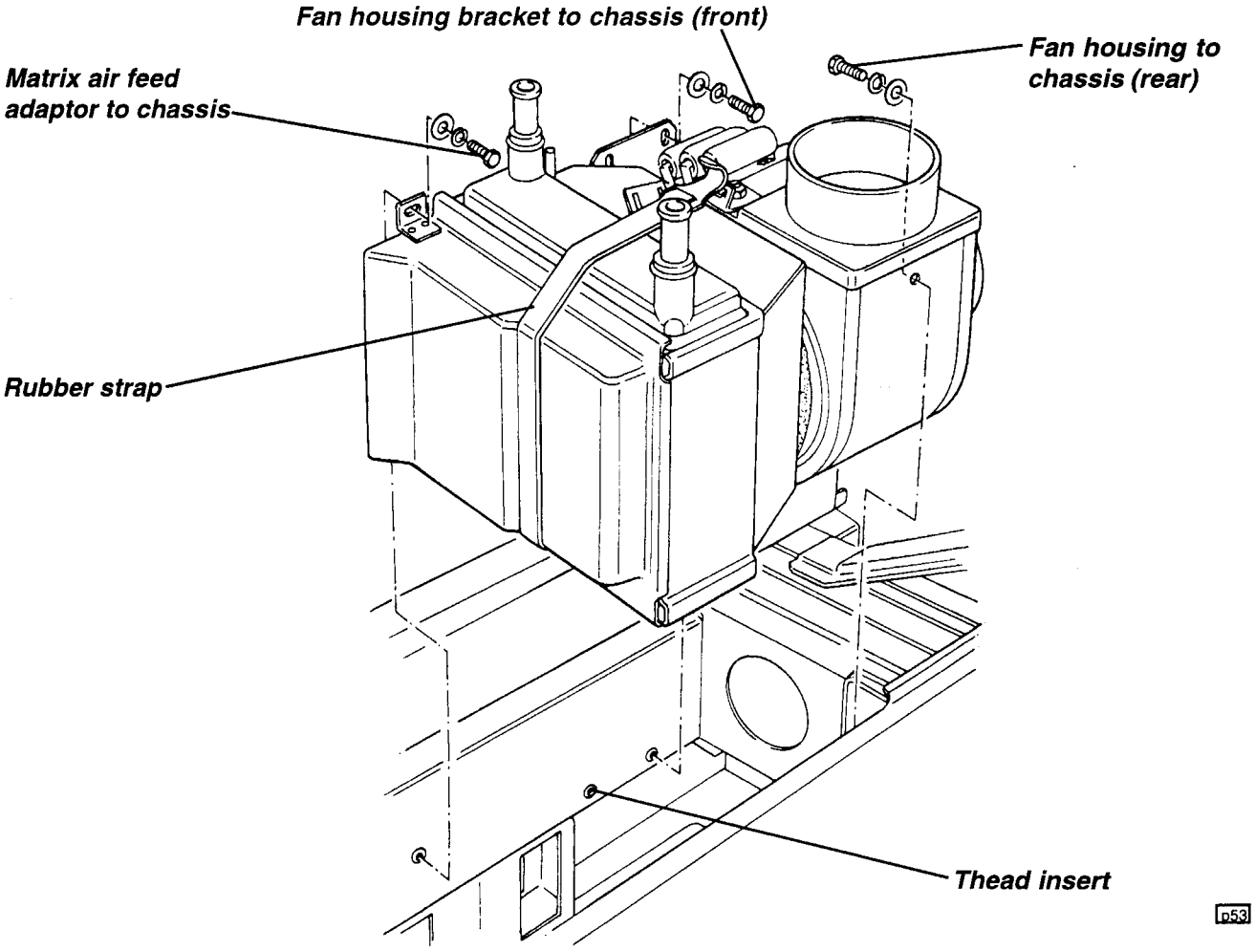

To remove the matrix or blower fan unit, the complete assembly should be removed from the chassis:

1. Remove the washer bottle, battery and blower fan outlet ducting.
2. Label and disconnect the electrical leads to the blower fan.
3. Release the spring clip securing the outer control cable to the matrix moulding, and unhook the inner cable from the flap lever.
4. Release the two hoses from the matrix inlet and outlet connections, and immediately plug to reduce coolant loss.
5. Remove the four screws securing the matrix/blower fan assembly to the chassis, and withdraw the complete unit.
6. Unhook the rubber strap to separate the matrix and mouldings from the blower fan unit.
7. Re-assemble in reverse order to the above, noting that on LHD cars, a spacer is used between the fan housing and the rear of the chassis well. Note that the control cable to the air blender flap is connected to the outermost hole in the flap lever arm.

CLUTCH

SECTION QF - M111 ELISE

	Sub-Section	Page
General Description	QF.1	2
Adjustment	QF.2	3
Hydraulic Release System	QF.3	4
Clutch Assembly	QF.4	9

Clutch system general arrangement

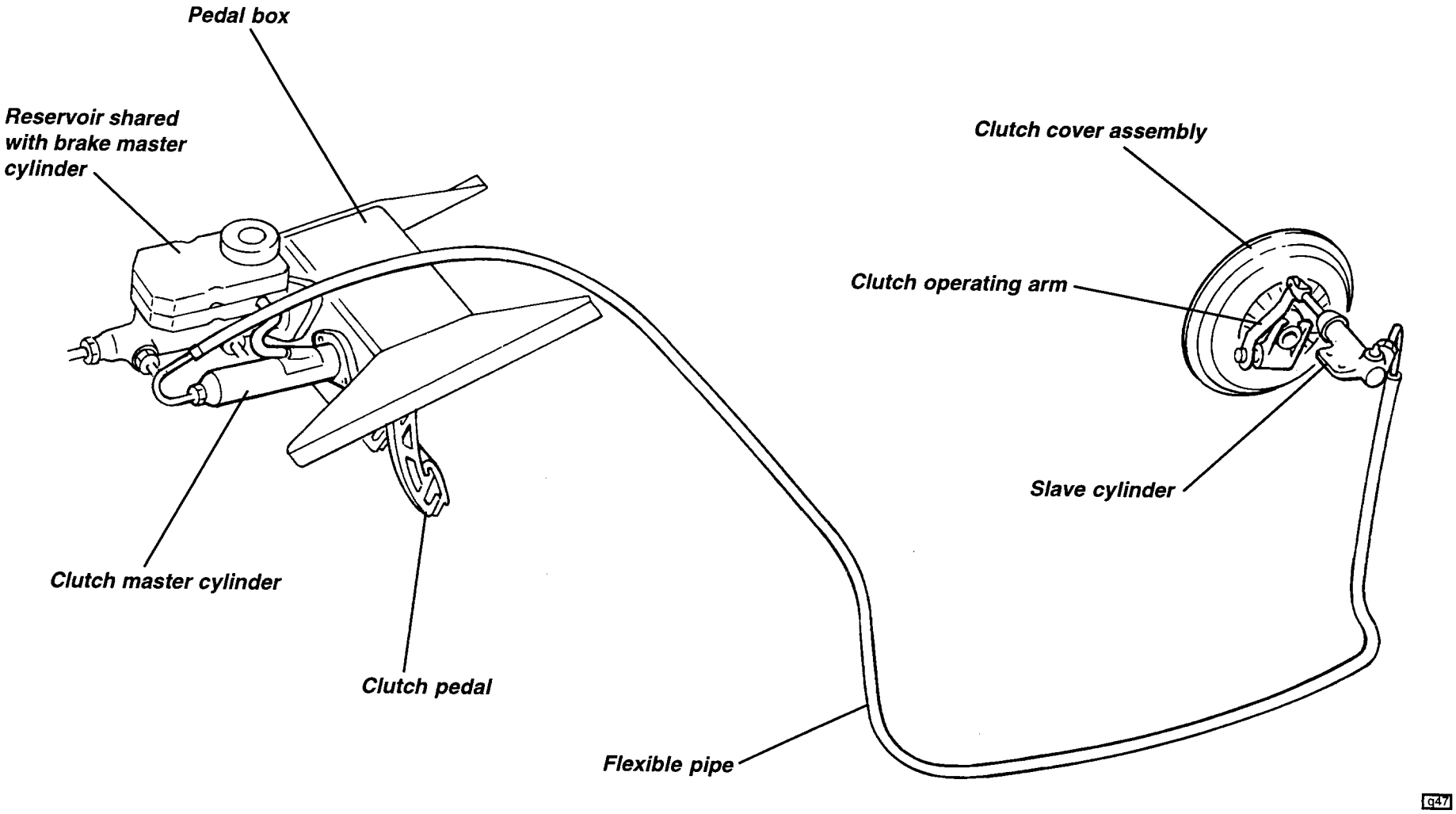

QF.1 - GENERAL DESCRIPTION

The driving element of the clutch assembly consists of the rear face of the engine flywheel, and a pressure plate fixed to the flywheel via the spring diaphragm clutch cover assembly. The driven element, is a single, dry, double sided friction plate, splined to the gearbox input shaft, and interposed between the flywheel and pressure plate. The diaphragm spring in the clutch cover clamps the friction plate between the pressure plate and flywheel to provide the drive connection between engine and gearbox. The gearbox input shaft, on which the friction plate is free to slide axially, is 'overhung' from the gearbox, with no spigot bearing in the rear end of the crankshaft.

The hydraulic clutch release mechanism uses a master cylinder fixed to the pedal box, and a slave cylinder mounted on a fabricated steel bracket attached to the transmission case. The master cylinder is connected to the fluid reservoir of the brake master cylinder, and uses a flexible synthetic pipe (steel braided on later cars) routed through the LH sill to connect to the slave cylinder. The slave cylinder operates a release arm which is connected by shaft to the release fork inside the clutch housing. The fork presses the ball type release bearing against the inner ends of the diaphragm spring fingers, which pivot about their fulcrums and relieve the clamping force applied to the pressure plate via the diaphragm outer edge. The release bearing slides on a guide sleeve surrounding the gearbox input shaft. A preload spring inside the slave cylinder applies light pressure to the release lever in order to ensure that contact between the release bearing and diaphragm spring fingers is maintained.

QF.2 - ADJUSTMENT

No routine adjustment of the clutch or release mechanism is required. The clutch slave cylinder is self adjusting, with the 'rest' position of the piston dependent on the thickness, or degree of wear, of the friction plate. As wear of the friction plate takes place, and its thickness is reduced, the slave cylinder piston is pushed progressively further back on the return stroke with fluid being returned to the master cylinder reservoir.

The master cylinder pushrod length requires adjusting only on assembly in order to ensure:

a) the master cylinder piston is allowed fully to return under the action of its internal spring, and open the port to the fluid reservoir;

b) maximum effective stroke of the cylinder is achieved.

The effective length of the pushrod can be adjusted by screwing the hexagonal pushrod into or out of the pedal trunnion. Too much preload will not allow the reservoir port to open, whereas too much free play will not allow sufficient fluid displacement and may induce a rattle from the pedal. To check the pushrod adjustment:

i) Remove the locking grub screw (3 mm key) in the side of the pedal trunnion, and apply Permabond A131 to the thread. Refit loosely.

ii) Screw the pushrod into or out of the trunnion until the pedal just contacts the pedal box flange (upstop).

iii) Apply ½ turn of preload to the pushrod, and tighten the trunnion lock screw to 5 Nm.

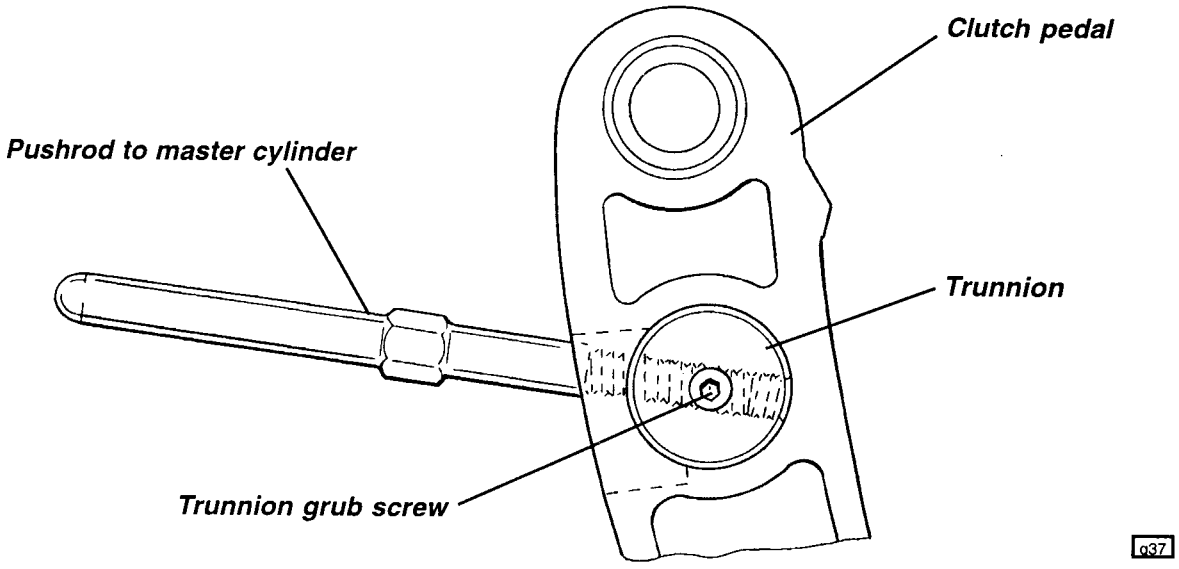

Note that no pedal downstop is fitted, and that the pedal will contact the pedal box before the master cylinder 'bottoms out'.

Adjusted as above, full pedal travel should produce a slave cylinder pushrod movement of 13 - 15 mm. If this is not achieved, bleed the hydraulic system using new DOT 4 non-mineral type fluid.

Note that the alloy trunnion in the pedal is Zylan coated to provide maintenance free lubrication, although silicone grease is used on initial assembly.

QF.3 - HYDRAULIC RELEASE SYSTEM

Master Cylinder

The 5/8" (15.9 mm) bore master cylinder is mounted on the pedal box, and is accessible from within the front services compartment. The cylinder is not equipped with its own fluid reservoir, but instead is linked via hose to the adjacent brake fluid reservoir.

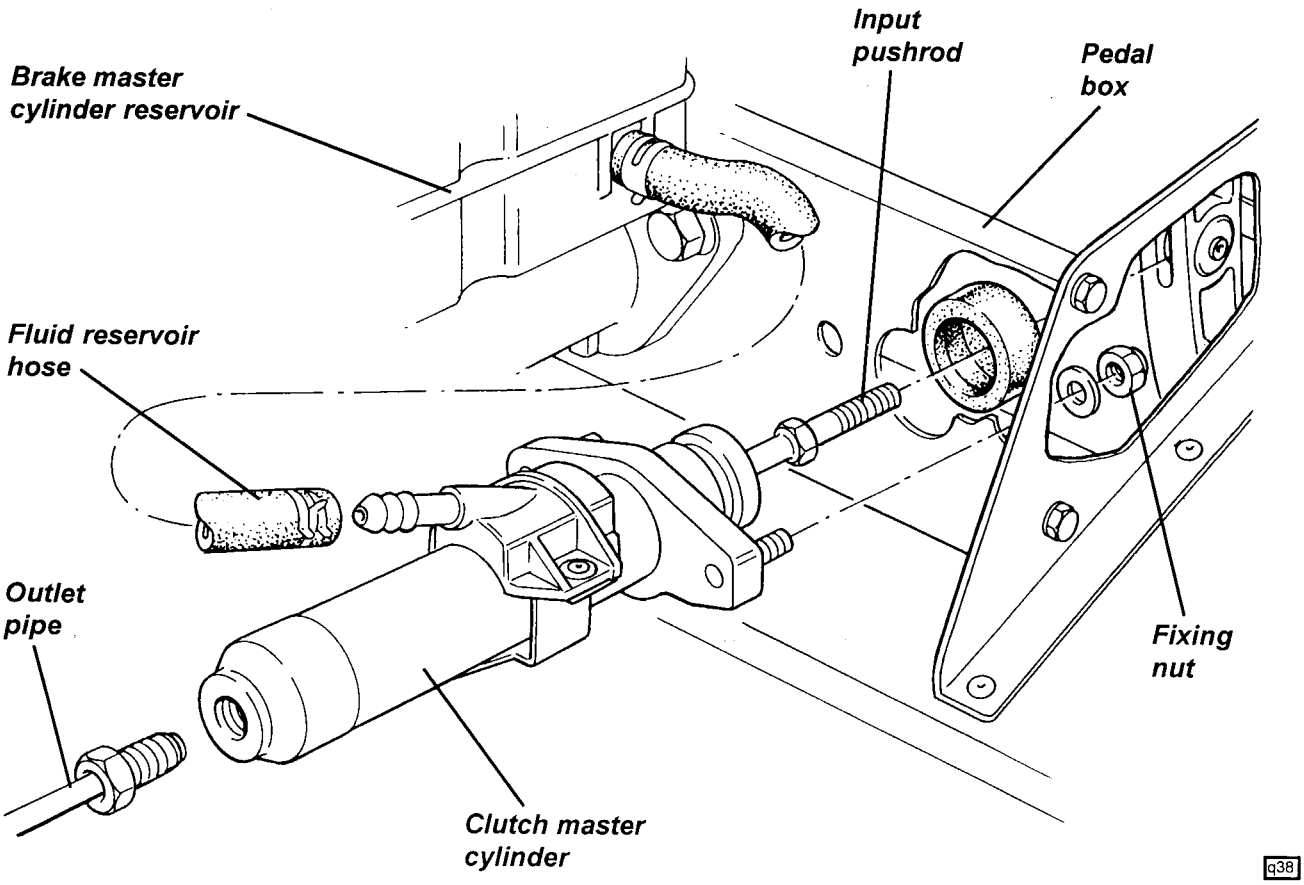

To replace the master cylinder:

- Clean the master cylinder and surrounding area with methylated spirit. **Do not use petrol or paraffin.**
- Take all necessary precautions to guard against contamination of painted surfaces with brake fluid.
- Disconnect and immediately plug and cap the hose connection to the fluid reservoir, and the output pipe connection.
- From inside the footwell, remove the two bolts securing the cylinder to the pedal box. Withdraw the cylinder from the front services compartment.
- To refit, reverse the removal procedure, taking care to feed the pedal pushrod through the dust boot and into the end of the master cylinder as the cylinder is positioned. Tighten the outlet pipe connection to 20 - 24 Nm and bleed the hydraulic system of air.

To overhaul the master cylinder:

- Clamp the cylinder in a soft jawed vice, and pull the rubber dust boot off the cylinder end.
- Remove the circlip from the end of the cylinder, taking care not to scratch the bore surface. Remove the stop washer and extract the cylinder internal parts. Lay the components in their correct order on a clean sheet of paper.
- Remove the rubber seals from the piston, taking note of the position and orientation of all parts.
- Clean all parts thoroughly with only new brake fluid, and dry with a lint free cloth. Carefully examine the cylinder bore for scoring, corrosion or visible wear, and replace if any such signs are apparent. Check that all drillings in the cylinder body and piston are clear. If the cylinder is serviceable, rebuild the unit using new seals and components from the appropriate overhaul kit.
- Note that the chamfer on the inside diameter of the stop washer should face rearwards (i.e. towards open end of cylinder).

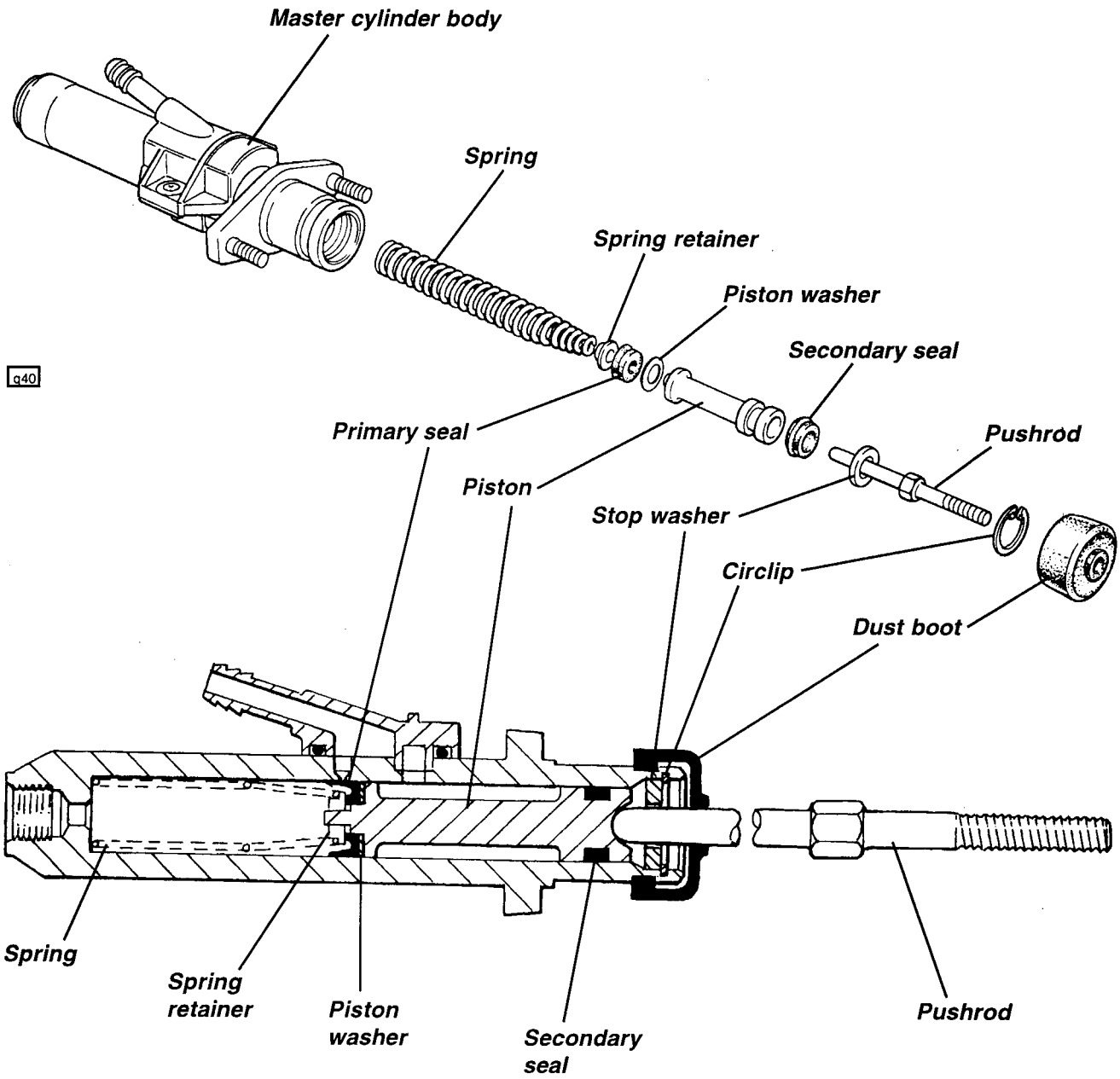

- On reassembly, scrupulous cleanliness is essential. Clean hands thoroughly beforehand.
- Lubricate all seals, the cylinder bore, and all internal components with clean brake fluid.
- Fit the secondary seal into its groove on the piston, with the lip towards the front.
- Fit the piston washer, primary seal and spring retainer onto the front end of the piston, with the lip of the seal facing forwards.
- Insert the spring and piston assembly into the cylinder, taking care no to bend back the seal lips. Fit the stop washer and retain by fitting the circlip into the groove in the rear end of the cylinder bore. Check that the circlip is seated correctly in the groove. Pack the inside of the dust boot with rubber grease and seat the lip of the boot in the groove on the outside of the cylinder body.
- Use a suitable rod to operate the piston by hand several times to check for free movement of the internal parts.
- Refit the cylinder as detailed above.

Slave Cylinder

The slave cylinder is secured by two bolts to a mounting bracket on the transmission, and is connected to the clutch operating lever by a fixed length pushrod and clevis pin. A sleeve nut is used to connect the flexible hydraulic pipe, and a bleed nipple is provided by which to bleed air from the hydraulic system.

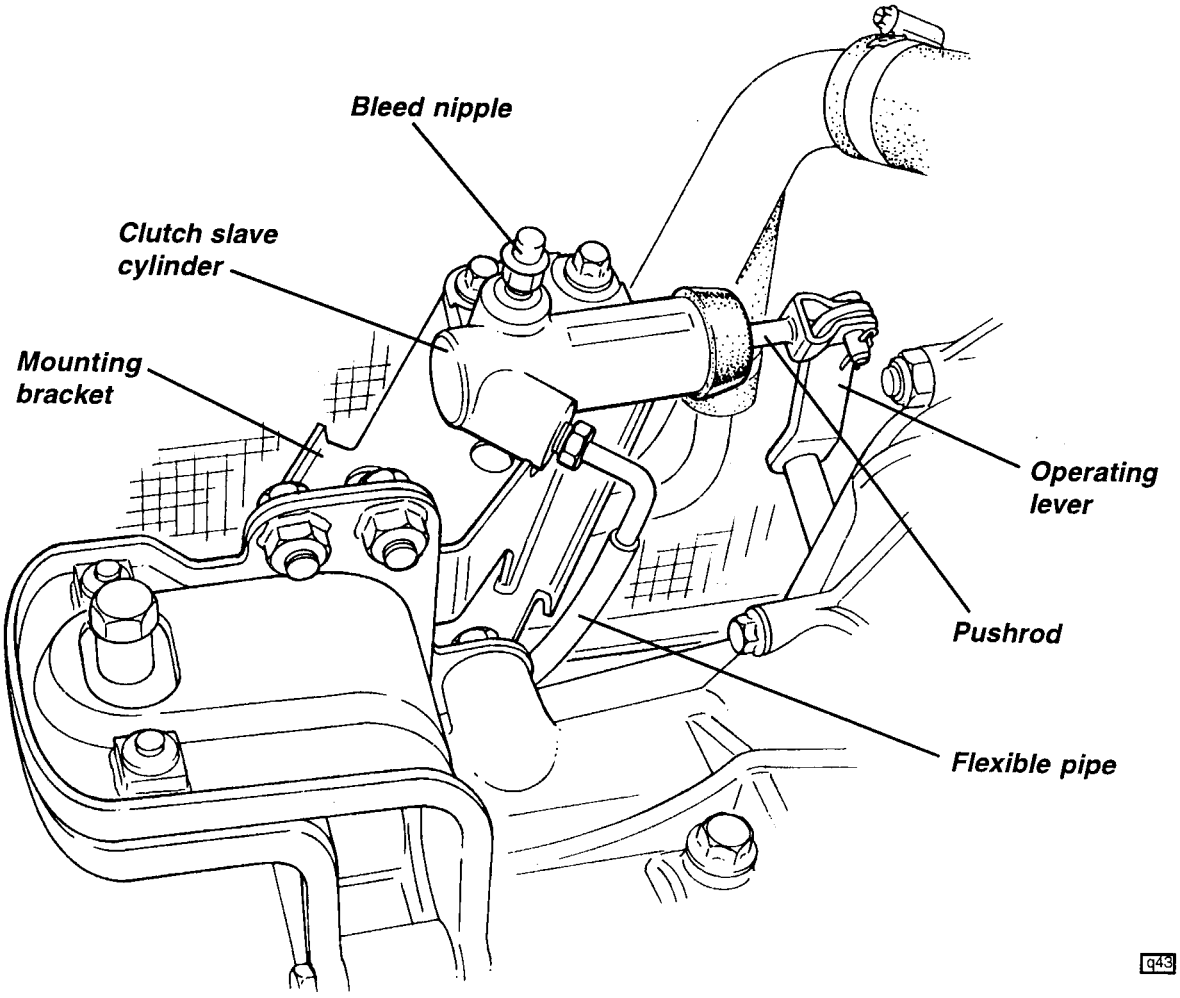

To replace the slave cylinder:

- Clean the slave cylinder and surrounding area with methylated spirit. **Do not use petrol or paraffin.**
- Take all necessary precautions to guard against contamination of painted surfaces with brake fluid.
- Remove the 'R' pin and clevis pin connecting the pushrod to the clutch operating lever.
- Disconnect and immediately plug and cap the hydraulic hose connection.

- Remove the two bolts securing the cylinder to the mounting bracket, and withdraw the cylinder.
- To refit, reverse the removal procedure, tightening the slave cylinder mounting bolts to 25 Nm. Clean and refit the specially coated clevis pin and 'R' pin to connect the pushrod to the release lever and check that the pushrod is correctly centralised in the slave cylinder piston. Tighten the hydraulic pipe connection to 20 - 24 Nm, and bleed the hydraulic system of air in the usual way. Tighten the bleed nipple to 7 Nm.

To overhaul the slave cylinder:
- Clamp the cylinder in a soft jawed vice, and withdraw the pushrod and rubber dust boot from the cylinder.
- Withdraw the piston and spring and remove the rubber seal from the piston, taking note of the orientation.
- Clean all parts thoroughly with only new brake fluid, and dry with a lint free cloth. Carefully examine the cylinder bore for scoring, corrosion or visible wear, and replace if any such signs are apparent. If the cylinder is serviceable, rebuild the unit using new seals and components from the appropriate overhaul kit.

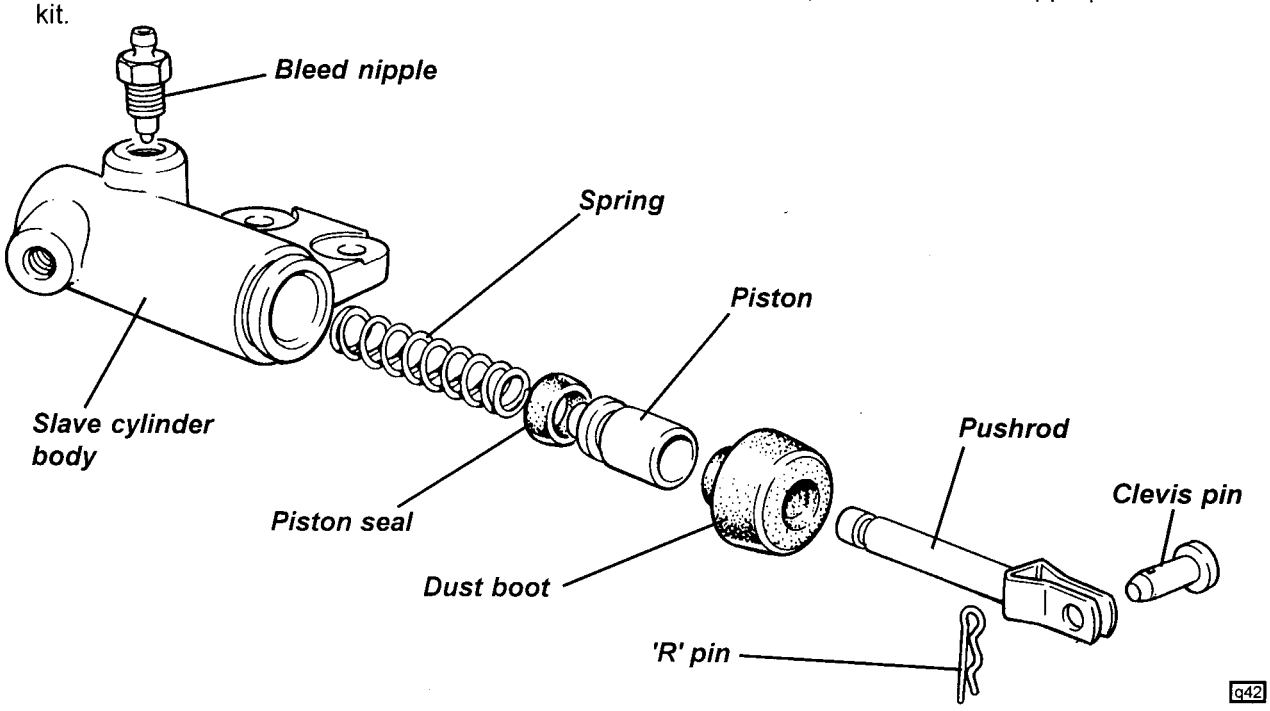

- On reassembly, scrupulous cleanliness is essential. Clean hands thoroughly beforehand.
- Lubricate the seal, the cylinder bore, and all internal components with clean brake fluid.
- Fit the seal into its groove on the piston, with the lip towards the closed end of the cylinder.
- Insert the spring and piston assembly into the cylinder, taking care no to bend back the seal lips.
- Pack the inside of the dust boot with rubber grease and seat the lip of the boot in the groove on the outside of the cylinder body.
- Fit the pushrod throught the dust boot and press the piston against its spring several times to check for free movement of the piston.
- Refit the cylinder as detailed above.

Hydraulic Pipe

The one piece flexible synthetic pipe between master and slave cylinders is routed through the dash baffle panel and along the outside of the left hand chassis sideframe, enclosed within the composite sill panel, and wrapped with foam sleeving to supress rattles. In July '98, the pipe specification was upgraded and added a metal braiding in order better to resist pipe expansion and loss of clutch release travel in conditions of extreme heat. Service replacement pipes are of only the later type, with the RHD variant supplied with a separate front end 'U' bend to aid assembly. The pipe should not be withdrawn from the car without attaching a guide wire with which to aid routing of the new pipe.

Replacing Hydraulic Pipe

During this operation, take all appropriate precautions to protect against damage caused by contamination of painted surfaces with brake fluid.

1. For optimum access, remove the left hand side dash panels (see Service Notes sub-section BN.12) and the LH sill coin tray. Remove the engine bay undertray/diffuser panel and the shear panel beneath the fuel tank.

2. Release the clutch pipe from the master cylinder and slave cylinder, and immediately cap the cylinder ports to minimise fluid loss and prevent dirt ingress. Drain the pipe of fluid, and cap both ends to prevent drips and fluid contamination of painted surfaces.

3. To ease withdrawal of the pipe, straighten out the right angled connector at the rear end of the pipe, and reaching into the rear end of the sill, remove as much of the foam sleeving from the pipe as can be accessed. Remove the grommet from the scuttle baffle panel.

4. On LHD cars:
   - Securely attach a draw wire to the rear end of the pipe, and withdraw the pipe from the front services compartment, leaving the draw wire in its place.
   - Use the wire to draw the new clutch pipe into place, slave cylinder end leading, from the front services compartment. Note that the new pipe is supplied already bound with anti-rattle foam.

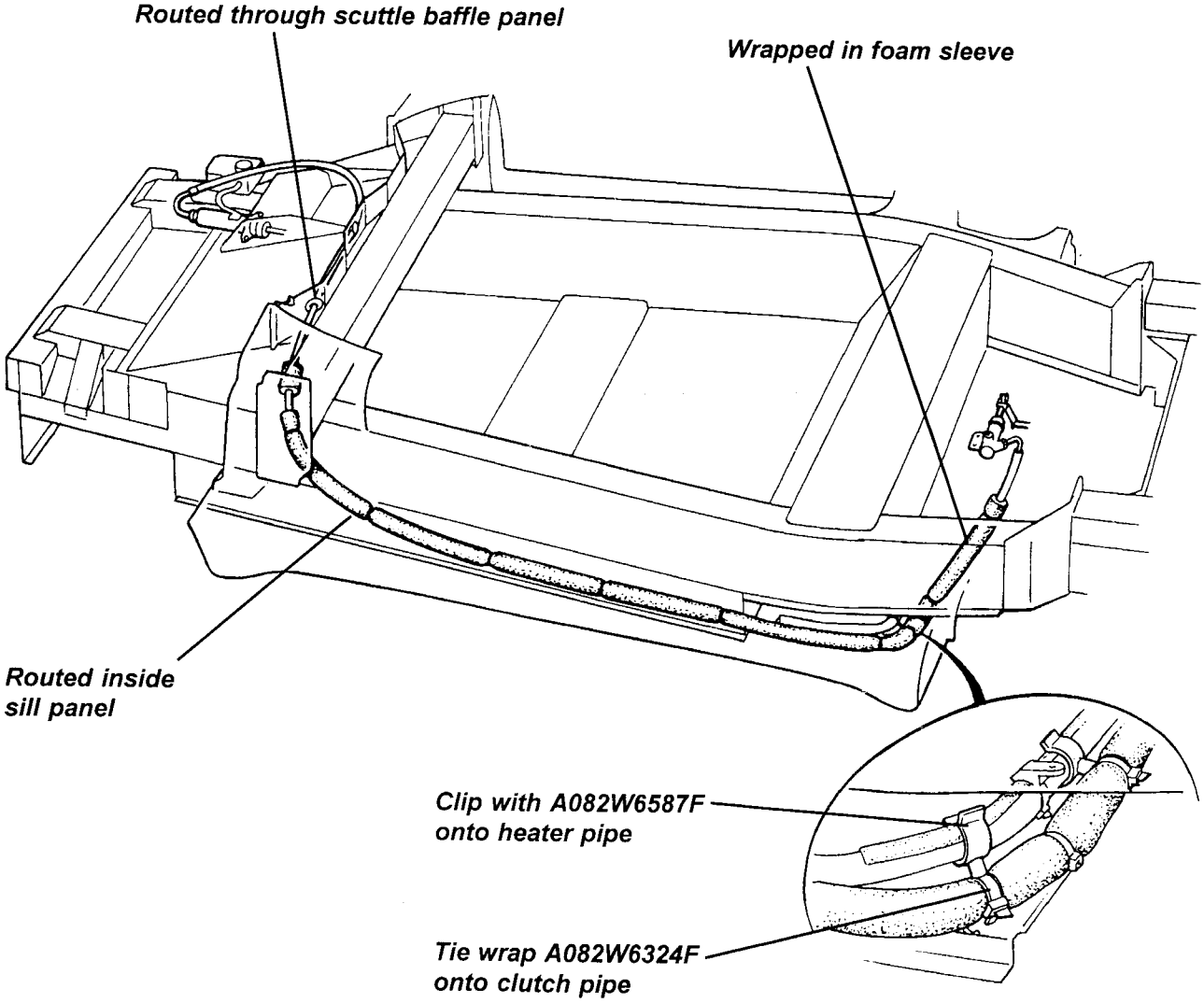

q46

5. On RHD cars:
   - Use an M12 female/M12 female connector to join the rear end of the (straightened) old pipe to the front end of the new.
   - Draw the pipes through into the left hand side of the front services compartment, before continuing to feed the pipes behind the windscreen demist duct to the master cylinder.

6. Fit the pipe grommet into the scuttle baffle panel. On RHD cars, fit the 'U' bend connector onto the front end of the new pipe, and tighten to 20 - 24 Nm.

7. Connect the new pipe to the master cylinder, and tighten to 20 - 24 Nm. Connect to the slave cylinder and tighten to 20 - 24 Nm.

8. At the rear end of the sill, where the pipe enters the engine bay, secure the lagged clutch pipe to the heater return pipe using in each of two places, a pair of interconnecting clips; pipe clip A082W6587F and tie strap clip A082W6324F. Use of these clips ensures that the two pipes are separated, in order to minimise heat transmission from the heater pipe to the clutch fluid.

9. Bleed the clutch system of air using conventional techniques, and refit all panels removed for access.

QF.4 - CLUTCH ASSEMBLY

The clutch assembly comprises the friction plate, clutch cover assembly (pressure plate/diaphragm spring) and release bearing. For access to the clutch assembly, the transmission must first be removed, with or without the engine 'in situ'. Access is improved if the rear topshell is removed.

Removal of clutch assembly:

With the car supported on a 'wheel free' lift:

1. Remove the LHR lower wishbone:
   - Release the bolt securing the spring/damper unit to the lower wishbone;
   - Release the wishbone to chassis pivot bolts;
   - Release the parking brake cable ties, and swing the wishbone out of the way.

2. Release the RHR suspension toe control link from the hub carrier, and release the top ball joint plinth from the hub carrier taking note of the camber adjustment shimplates in order to allow withdrawal of the driveshaft from the transmission.

3. Release both driveshaft inboard C.V. joints from the transmission using special wedge tool T000T1276 on the RH side, and/or applying a shock pull to the C.V. joint body using a slide hammer with a forked end. Fit blanking plug T000T1014 into the transmission to limit the amount of transmission oil loss.

   CAUTION: Do NOT attempt to remove an inboard C.V. joint from the transmission by pulling on the driveshaft. This action will cause the joint to become disassembled and may entail replacement of the joint. The components of the inboard plunging joint are held in position, for transit purposes only, by a collar within the boot which will be overidden if excessive axial force is used. Apply pressure only to the 'tulip' or outer body of the joint.

4. Remove the intake hose between air cleaner housing and engine. Pull out the button retaining the housing to the mounting bracket, and withdraw the cleaner housing from its mounting grommets. Release the mounting bracket from the roll over bar strut.

5. Remove the 'R' clip and clevis pin connecting the clutch slave cylinder to the release arm. Remove the four bolts fixing the slave cylinder bracket to the transmission, and support aside.

6. Release the two bolts securing the starter motor and dirt shield to the clutch housing. Remove the shield, and withdraw and support the starter motor, taking care to protect the live starter motor lead from grounding.

7. Remove the dirt shield from the top front of the clutch housing.

8. Disconnect the reverse light switch, and speedo drive cable.

9. Disconnect the two gearchange cables from their transmission levers, and release the cables from the abutment bracket.

10. Support the weight of the transmission assembly before removing the LH engine (transmission) mounting and bracket.

11. Remove the six bolts securing the clutch housing to the engine:
    - 2 bolts to the sump;
    - 1 bolt each side through the block lower 'wings';
    - 2 bolts securing the top of the clutch housing to the engine.

12. Pushing the engine to the right and downwards at the flywheel end, withdraw the transmission from the engine.

Inspection of components:

13. Before removing the clutch cover from the flywheel, place a flat plate over the ends of the diaphragm spring fingers, and use a feeler gauge to measure the any gaps between individual fingers and the plate. If any clearance is greater than 1mm, the clutch cover assembly should be replaced.

14. Progressively loosen, and then remove the six fixings securing the clutch cover to the flywheel. Remove the cover and friction plate.

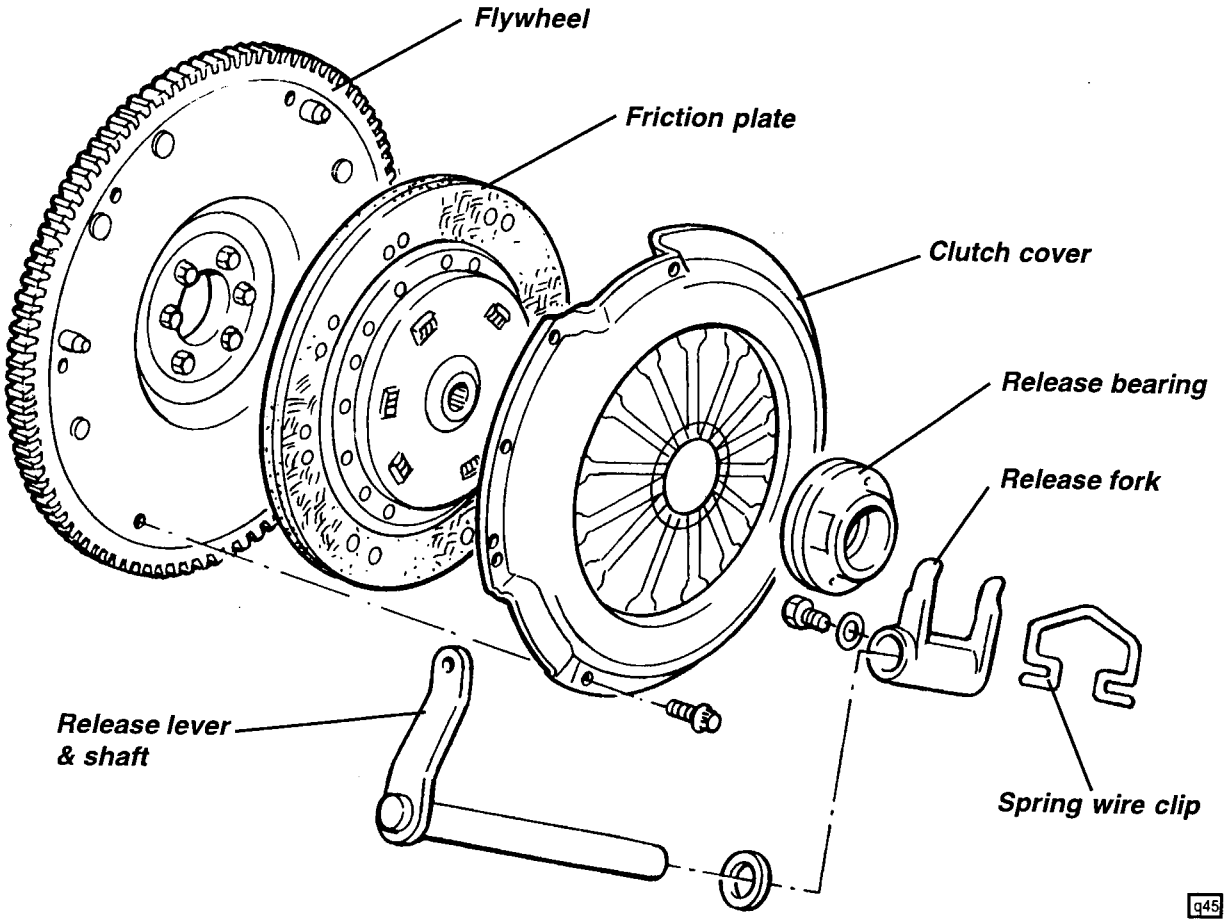

15. Examine the friction plate for oil contamination, broken cush drive springs, cracking of the spring apertures, or any other damage.

    Measure the overall thickness across the friction material;
    New thickness: 6.9 - 7.4 mm
    Service limit: 5.6 mm

    Measure the depth of the rivet heads below the friction material surface;
    New rivet depth: 1.0 mm
    Service limit: 0.2 mm

    Measure axial run-out of the friction plate surface;
    New run-out: 0.8 mm max.
    Service limit: 1.0 mm max.

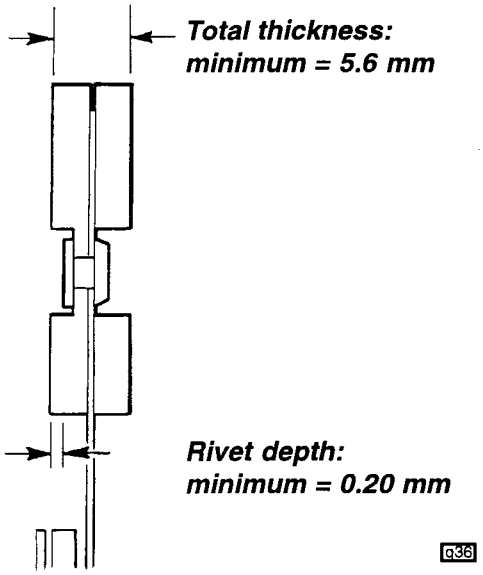

    Renew the plate if any damage is detected, or if outside service limits. If there were symptoms of clutch judder, the friction plate should be replaced as a precaution regardless of inspection results.

16. Inspect the surface of the pressure plate for excessive wear or scoring, and replace if in any doubt. If there were symptoms of clutch judder, or the cover is accidentally dropped, the clutch cover assembly should be replaced as a precaution regardless of inspection results.

17. Check the surface condition and run-out of the flywheel friction surface (see section ED.14) and replace the flywheel if necessary.

18. Withdraw the release bearing and examine for signs of wear, damage or roughness, and replace if in doubt.

19. Examine the condition of the clutch release fork, pivot shaft bushes and oil seal (see transmission repair section), and replace components as necessary.

Re-fitment of clutch assembly:

20. Smear the splines of the friction plate with molybdenum disulphide grease, and fit against the flywheel with the 'FLYWHEEL SIDE' marking towards the flywheel. Fit the clutch cover over the friction plate and locate on the flywheel dowels.

21. Fit clutch alignment mandrel T000T1483 to centralise the friction plate, and fit the clutch cover retaining screws finger tight. Using a diagonal sequence, progressively tighten the cover screws, and monitor the free turning of the mandrel. If the diaphragm spring fingers begin to pinch the mandrel, and a drag on its turning is felt, remove the tool. Finally tighten the cover fixing screws to 25 Nm.

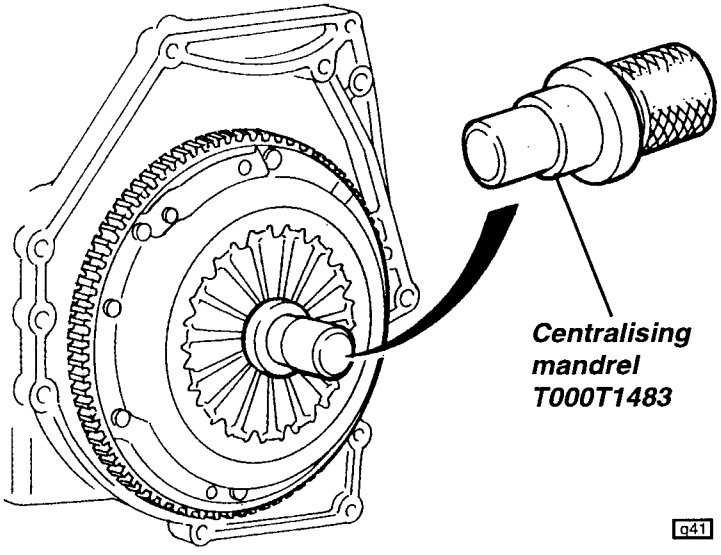

22. Refit the transmission to the engine, engaging the gearbox input shaft into the friction plate splines, and locating the clutch housing onto the engine mating face dowels.

23. Continue re-assembly in the reverse order to disassembly with the following notes:
- Use new circlips on the spigots of the inboard C.V. joints, and check that the driveshafts are fully inserted into the transmission by pulling on the inboard joint bodies.
- Use a new 'O' ring on the speedo drive cable, and lubricate on assembly.
- Renew the two topmost bell housing to engine patchlock bolts, or apply a suitable threadlocking compound if re-using original bolts.
- Use special tool T000T1390 to protect the output shaft seals during driveshaft refitment; see subsection FH.5.

Engine/Transmission Fixings (viewed onto LH end)

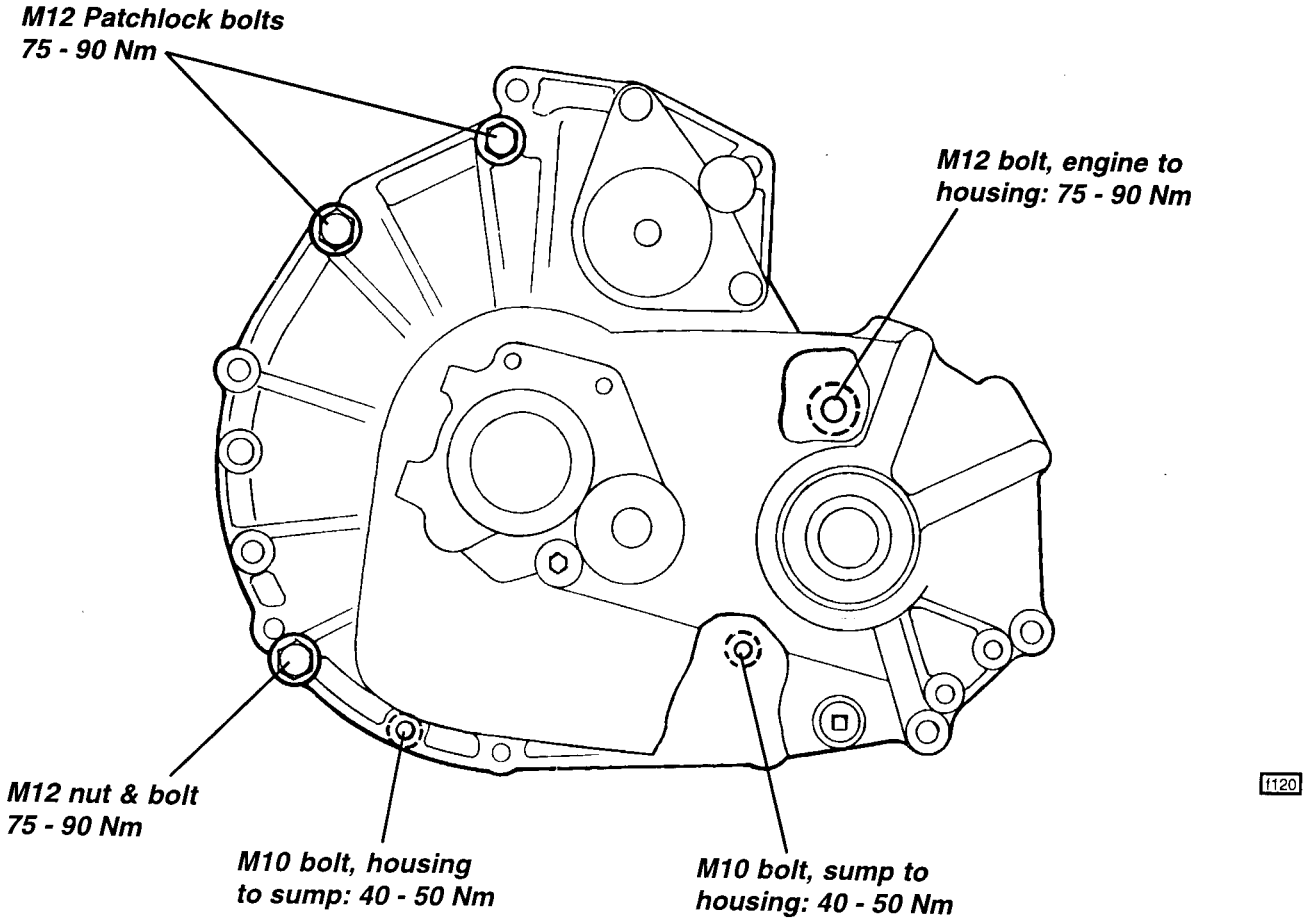

MOTOR SPORT

SECTION XA - ELISE

	Sub-Section	Page
Introduction	XA.1	2
190 VHPD Engine	XA.2	2
Competition/Competition Style Seats & 6-Point Competition Harness	XA.3	8
Roll-Over Bar Competition Reinforcement Kit	XA.4	11
Hand Held Fire Extinguisher	XA.5	14
Plumbed-In Fire Extinguisher	XA.6	15
Uniball Toe Link Kit	XA.7	17
Road Spring & Damper Set	XA.8	18
Front Hub Clamp Bolt Set	XA.9	21
Adjustable Front Anti-Roll Bar	XA.10	22
Oil Cooler Kit	XA.11	23
Battery Isolator Switch	XA.12	26
Removable Steering Wheel	XA.13	31
Stage 2 (135 bhp) Engine Tuning Kit	XA.14	33
Yokohama A038-R Competition Tyres	XA.15	35
340R 340 PS/Tonne Pack	XA.16	36
340R Oil Cooler Kit	XA.17	40
Goodridge Brake Hose Set	XA.18	42
5th-Point Seat Harness Kit	XA.19	42
Rear Racelight Conversion Kit	XA.20	43
Tonneau Cover	XA.21	44
340R Exchange 190 bhp ECM	XA.22	46
340R Tach Timer Level 1	XA.23	48
340R Competition Roll Over Bar	XA.24	50

XA.1 - INTRODUCTION

Lotus Cars is marketing a range of performance products for the Elise, aimed primarily at competition and/or track use of the vehicle. Some of the kits may be used alone, but others may be recommended for use only in conjunction with other complimentary kits. Using the car on the public highway with competiton parts fitted may contravene emission and/or noise regulations and invalidate insurance cover. In addition, the specification will be compromised in terms of comfort and refinement, and demand increased maintenance and service. In most cases, the standard vehicle warranty will not apply after the fitment of 'off road' or 'competition' oriented parts.

XA.2 - 190 VHPD ENGINE

The 190 VHPD (Very High Performance Derivative) engine is designed for motorsport track use only, and may not comply with emission regulations. The unit is based on the same 1.8 litre Rover 'K series' block as the standard engine, but with a revised cylinder head featuring new inlet and exhaust camshafts, solid tappets, and new throttle bodies providing individual throttle butterflies for each cylinder and a competition type oiled foam air cleaner. The engine bottom end includes forged pistons, strengthened connecting rods and crankshaft, and a lightened flywheel. A reprogrammed ECM is an integral part of the package. The preferred fuel is 98 RON unleaded ('Super Unleaded'), although 95 RON is useable. Oil recommendation is Mobil 1 5W/50 fully synthetic after running in on a good quality mineral oil.

Output:	Max. power;	190 ps @ 7,500 rpm
	Max. torque;	189 Nm @ 5,600 rpm

The engine is supplied only as a complete assembly for competition use, and does not carry the normal vehicle or parts warranty. Included in the engine package are:

Engine harness and new ECM with matched security 5AS module.
Exhaust manifold (unchanged).
Inlet manifold, throttle bodies and competition air filter. Air filter oil aerosol.
Fuel rail and injectors.
Alternator and auxiliary belt (unchanged).
Lightened flywheel (no clutch).
Engine mounted water rails.
Oil filter.
Ignition coil, spark plugs and H.T. harness.

Engine Fitting Kit

The additional parts required in order to fit the VHPD engine, are contained in fitting kit A111E0034J, and comprise:

- Carbon fibre cold air box and trunking. Requires removal of boot bulkhead to accommodate the air box, and cutting down of the standard air filter mounting plate for the trunking. The charcoal canister also requires removal, with a corresponding modification to the filler neck breather hose routing.
- New throttle cable.
- New fuel feed and return pipes with clips.
- Crankcase breather pipe kit.
- Throttle cable 'U' bracket.
- Cobra immobiliser bridging plug.
  Unless already so equipped, the later type closer finned (20 f.p.i. instead of 16 f.p.i.) engine cooling radiator must also be ordered and fitted - A111K0021F.

Additional parts strongly recommended:

In order fully to exploit the performance of the VHPD engine, it is strongly recommended to fit the following components:

- Oil cooler kit (A111K0037S).
- Competition silencer kit (A111S0037S) and catalytic converter substitution pipe (A111S0048S).

Guidance notes for fitting engine assembly

1. Remove complete power unit as detailed in Elise Service Notes sub-section EE.3.

2. Remove the transmission and clutch (sub-section QF.4). The standard friction plate and clutch cover can be fitted to the lightweight flywheel on the new engine.

3. New, longer, fuel feed and return pipes are needed to allow fitment of the new airbox:

   Parts Required (included in fitting kit)

Fuel Feed Pipe	A111L6039S	1
Fuel Return Hose	A111L6040S	1
Clip, fuel pipe support, tie wrap	A082W6324F	2
Clip, fuel pipe support, C clip	A082W6587F	2
Oetiker Clip, fuel return hose	B082K6060F	1

   Fit the new fuel feed pipe to the left hand end of the fuel rail, smearing the 'O' ring with silicone grease and tightening the two fixing screws to 4 Nm. Fit the return hose to the RH end of the rail and secure with the Oetiker clip. Secure the hose using the two 'C'/tie wrap clips to the header tank water hose as shown.

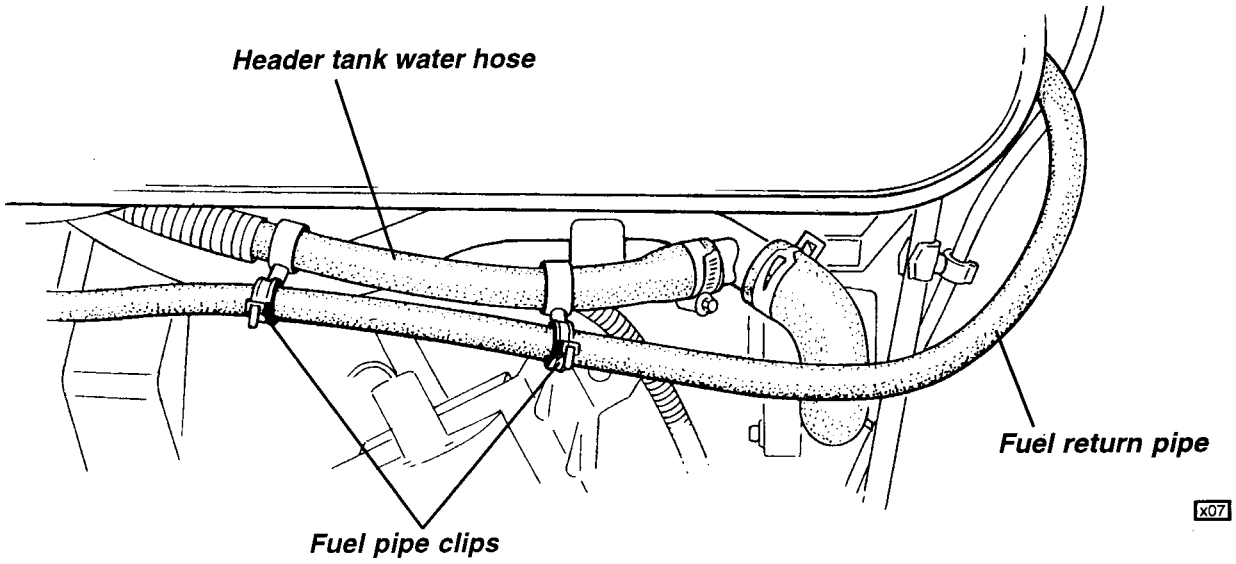

4. Remove the charcoal canister from the LH front of the engine bay and re-route the breather pipe from the roll over valve to vent to atmosphere at the RH engine mounting bracket.

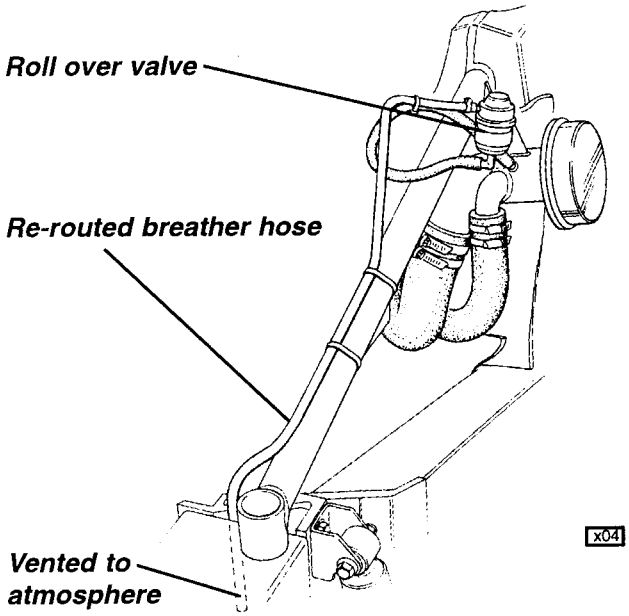

5. The mounting plate for the original air cleaner and fuel filter must be cut down to allow the new air intake trunking to be fitted.

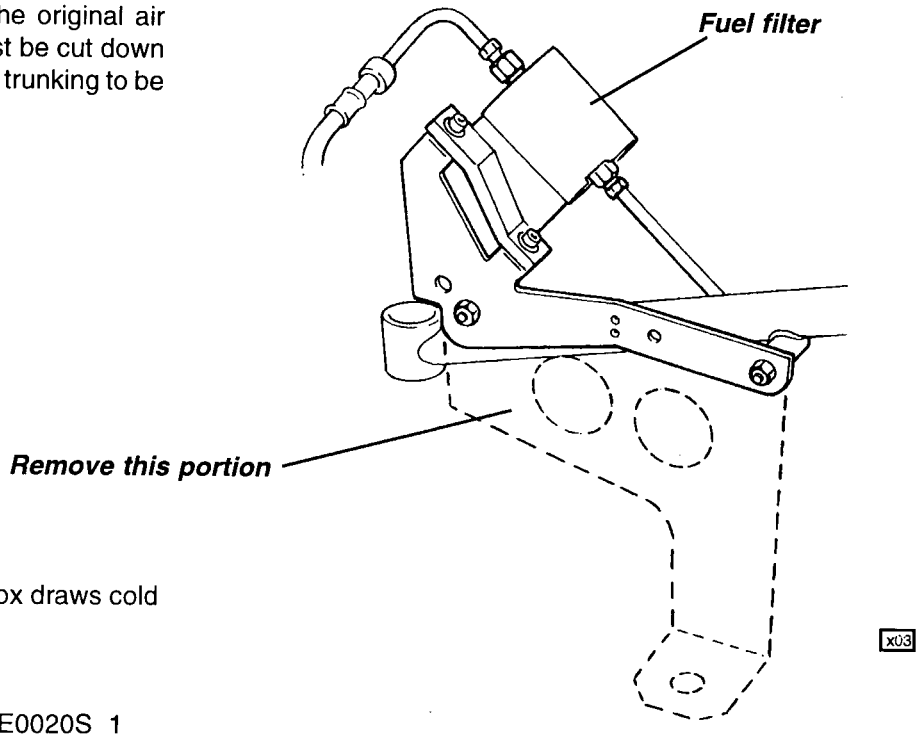

x03

6. The new carbon fibre airbox draws cold air from the LH air intake:

Parts Required

Carbon Fibre Airbox	A111E0020S	1
including:		
Ducting & Clips	A111E0022S	1
Adaptor	A111E0023K	1

Remove the new air cleaner element from the backplate by releasing the four socket head screws. Oil the filter element with the ITG aerosol to give an even coverage, then gently massage the oil into the depth of the foam.
Feed the air cleaner element into the new airbox, fit the airbox onto the backplate, and secure the airbox and cleaner with the four screws.
Remove the existing profile adaptor from the LH air intake, and fit the new adaptor and ducting.

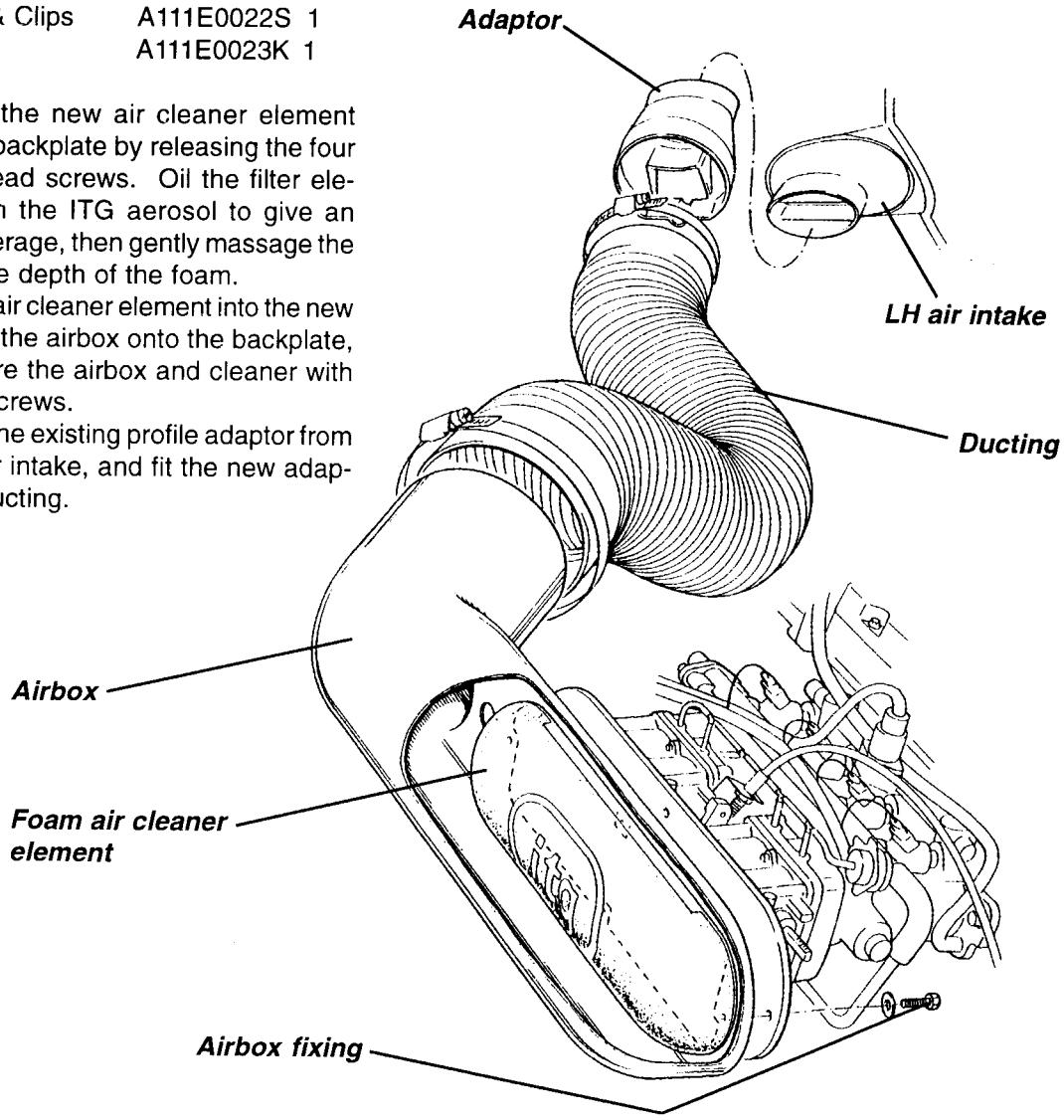

x01

7. Fit new engine breather hoses:

Parts Required

Breather Hose Kit	A111E0035J	1

Assemble the cam cover breather pipe assembly as shown and connect to the two cam cover spigots and airbox grommet.

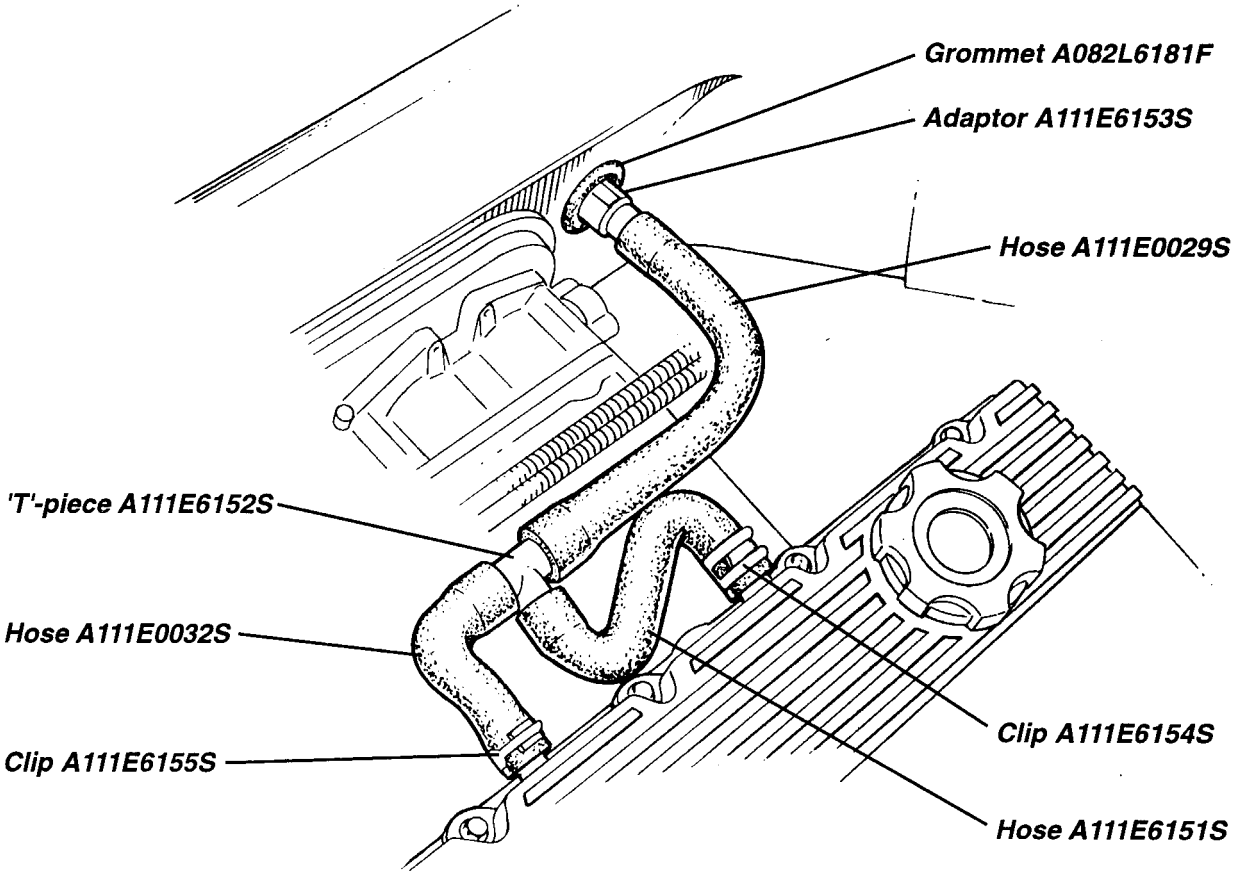

8. If the oil cooler kit is to be fitted, replace the oil filter housing with the new item, and fit the 90° adaptor for the oil pressure switch.

9. Refit the clutch and transmission (sub-section QF.4) to the engine, and fit the complete power unit back into the car (sub-section EE.3). Note that the luggage bay bulkhead is not re-fitted.

10. Fit the new throttle cable A111J0140S to the engine, connecting to the linkage between the two throttle bodies, and route as previously to the pedal box.

11. At the pedal box, check the specification of 'U' bracket attaching the throttle linkage to the pedal. The later type (introduced January '98) bracket must be fitted which is both thicker and wider. Check also that the bracket is correctly assembled and hooked through the pedal extrusion.

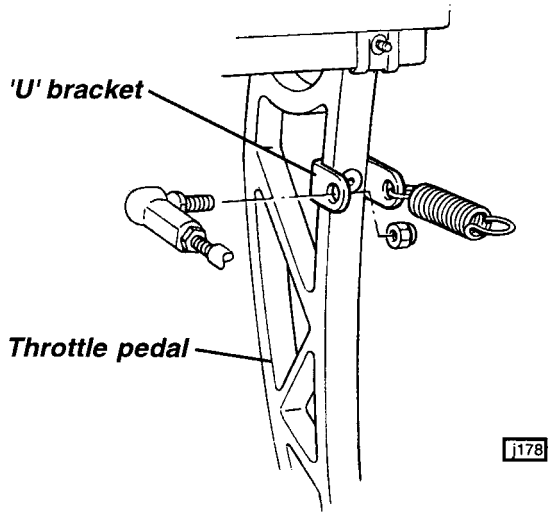

Old type; 1.6 mm thick, 10 mm wide.
Later type; 2.0 mm thick, 15 mm wide. (C111J0046F)
If necessary, rivet the later type bracket to the pedal using a 3/16" dia. 1/2" reach pop rivet.

12. Also at the pedal box, check the specification of the throttle linkage relay lever. The later type (B111J0045F introduced February '98) must be fitted which is notched to allow for clearance with the mounting plate fixing with the greater required lever travel. Alternatively, the existing lever may be modified as shown below:

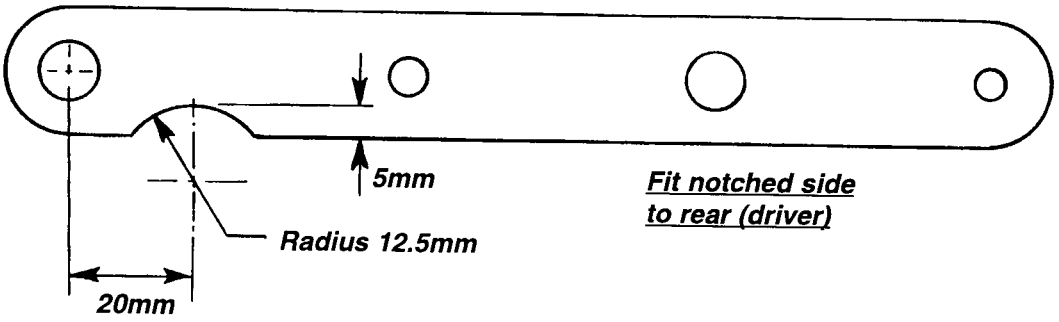

x06

Adjust the cable at the throttle body abutment to allow full throttle to be attained. If necessary, adjust the pedal upstop and pedal pullrod length. Ensure that the pedal downstop is set to protect the cable from strain at full throttle.

13. The engine is supplied with a new ECM together with a matched security 5AS module. If the car is to be used in competition, it is recommended to disable the passive immobilisation by disconnecting the driver's door switch. The alarm may still be armed on demand, but will not be triggered by the driver's door.
If the car is equipped with the optional Cobra alarm system, passive immobilisation can be overridden by unplugging the immobiliser module and substituting bridging plug A111M0123S.

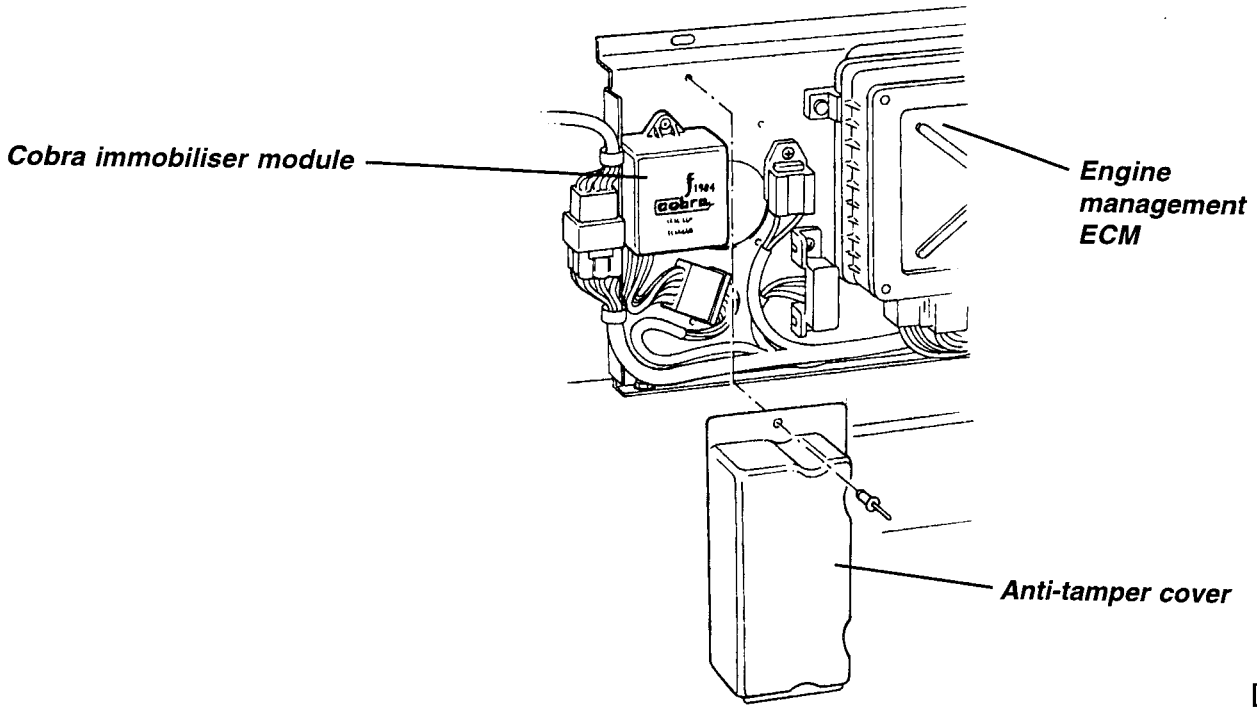

m225

16. Unless a 20 f.p.i. radiator is already fitted, replace the 16 f.p.i. radiator with the later type.

    Parts Required
    Radiator, engine cooling, 20 f.p.i. A111K0021F

    Refer to sub-section KF.4 for fitting details.

Note - Engine Air Filter Maintenance Instruction

The ITG foam air cleaner element supplied as part of this package requires the following maintenance procedure to ensure efficient results:

1. The new filter element must be oiled before use (see installation procedure).

2. The filter must be cleaned regularly, dependent on operating conditions. Cleaning can be carried out using a bath of petrol, or with liquid detergent and warm water. Rinse in warm water after cleaning. Do not use hot water. After cleaning, the filter should be allowed to dry thoroughly. Do not use a high pressure air line, or a hot air blower.

3. After cleaning, the filter must be re-oiled. Use the ITG dust retention aerosol to spray a good covering of oil all over the element, then gently massage the oil into the depth of the foam.
   IMPORTANT: If the filter is not oiled thoroughly some fine dust may work through the filter.

XA.3 - COMPETITION/COMPETITION STYLE SEATS & 6-POINT COMPETITION HARNESS

The Competition Seat is made by Corbeau specifically for the Elise for race track use, and features prominent shoulder 'wings' and raised side bolsters designed to provide maximum lateral support in racing conditions. Four point multi-position mounting brackets connect the seat to new seat mounting rails which use the original chassis fixing holes. A wide range of seat position, height and tilt is available, but once chosen is not readily adjustable. Note that the seat needs to be angled towards the car centreline (as does the standard seat) and uses different fixing holes in the inboard and outboard rails. The seat and mounting rails are designed for use with the 6-Point Competition Seat Belt Harness, in conjunction with the Roll Over Bar Reinforcement Kit.

Only one Competition seat can be fitted, as a similar passenger seat would result in a clash between the seat back 'wings'. However, a Competition Style passenger seat is available, which uses the standard seat shell, trimmed to match the Competition seat and modified to allow fitment of the competition seat belt harness.

Alternatively, a pair of Competition Style seats may be fitted using either the standard 3-point inertia reel belts, or, in conjunction with the roll over bar reinforcement kit, the 6-point Competition Harnesses.

The 'Kruss' Competition Harness uses 70mm wide shoulder straps wrapped around the roll over bar reinforcing frame, 70mm lap straps and 50mm crotch straps, all of which plug into a single buckle with a bi-directional lever release. The installation of the harness is illustrated overleaf for both seat types. Pay particular attention to the threading of the shoulder straps through the adjuster buckle, which should be positioned close up against the reinforcing bar. Reducer studs are supplied with the harness kit and are to be used for the lap strap anchorages on only the Competition Style seat.

Recommended seat and seat belt fitment combinations are as follows:

1.	-	Competition Driver's Seat (A111V6034S)	1 off
	-	Competition Style Passenger Seat (A111V6035S)	1 off
	-	Roll Over Bar Reinforcement Kit (A111A0245/6S)	1 off (LHD or RHD)
	-	6-Point Competition Seat Belt Harness (A111U0378S)	2 off
2.	-	Competition Style Seat (A111V6035S)	2 off
	-	Roll Over Bar Reinforcement Kit (A111A0245/6S)	1 off (LHD or RHD)
	-	6-Point Competition Seat Belt Harness (A111U0378S)	2 off
3.	-	Competition Style Seat (A111V6035S) (using standard 3-point seat belts)	2 off

Note that fitment of the Roll Over Bar Reinforcement Kit precludes the use of the standard 3-point belts, and that the Competition Seat Belt Harness is not approved for road use. Consequently, only option (3) above is suitable for road use.

Competition Harness Shoulder (& crutch) Strap Detail

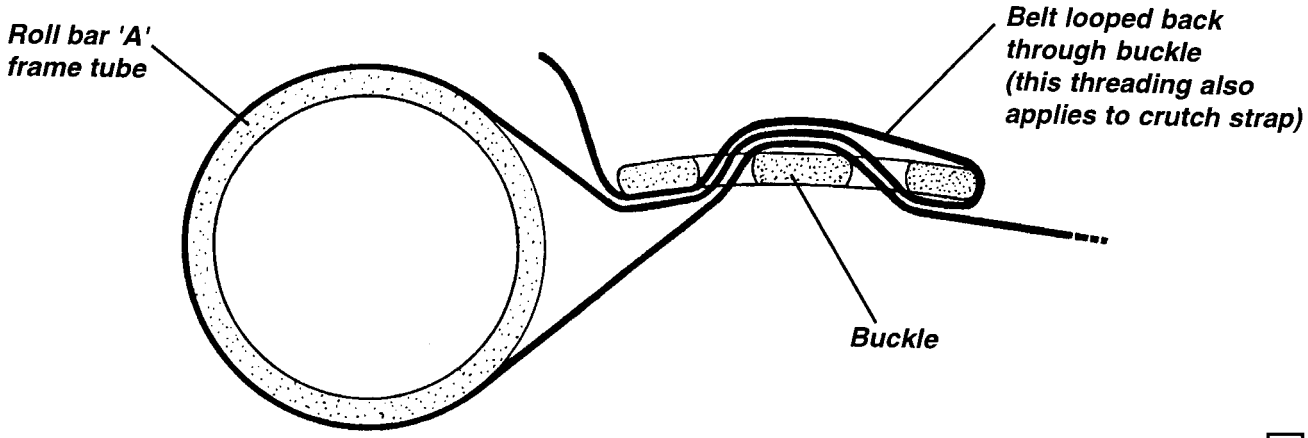

x10

COMPETITION SEAT

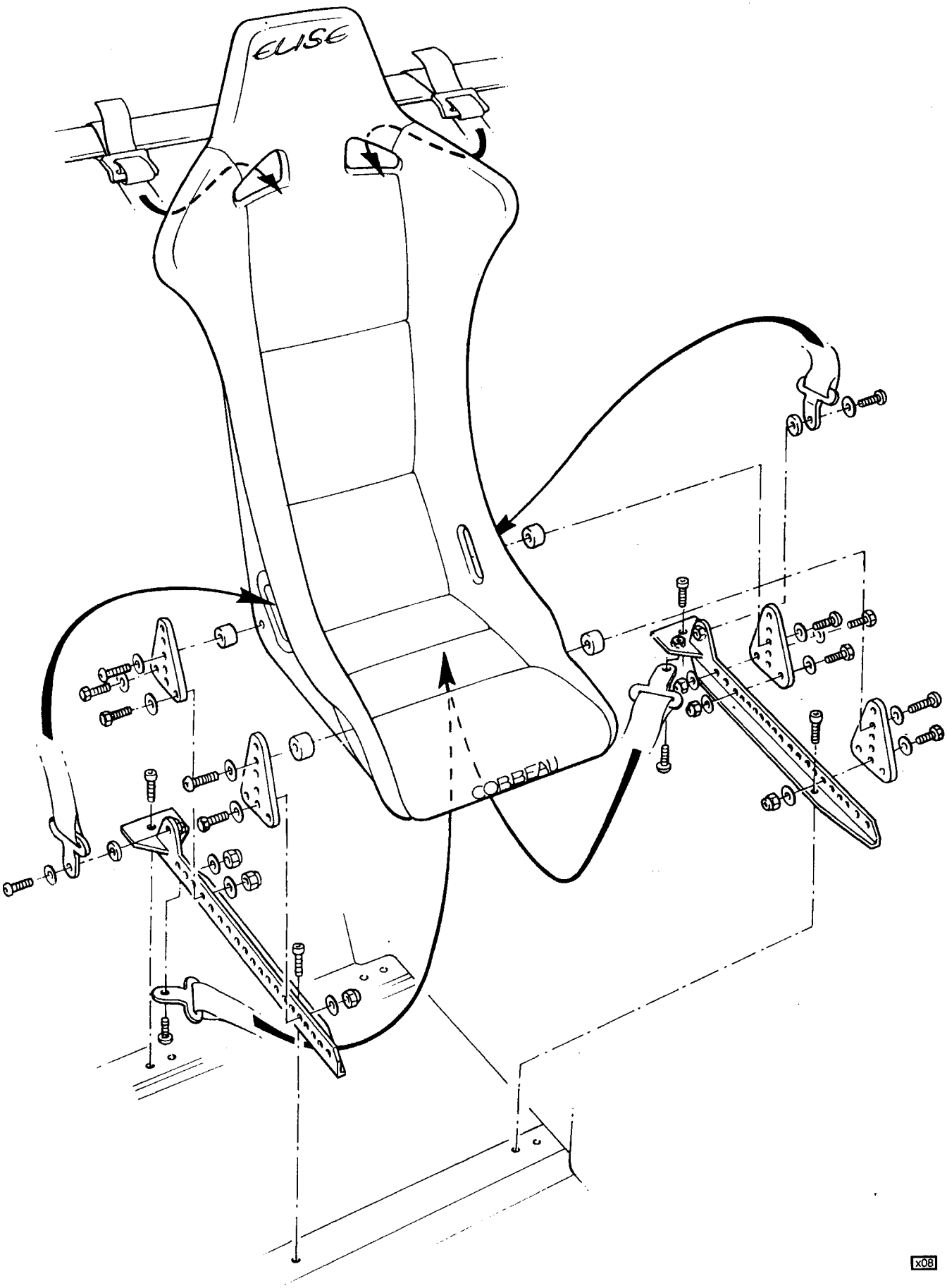

COMPETITION STYLE SEAT

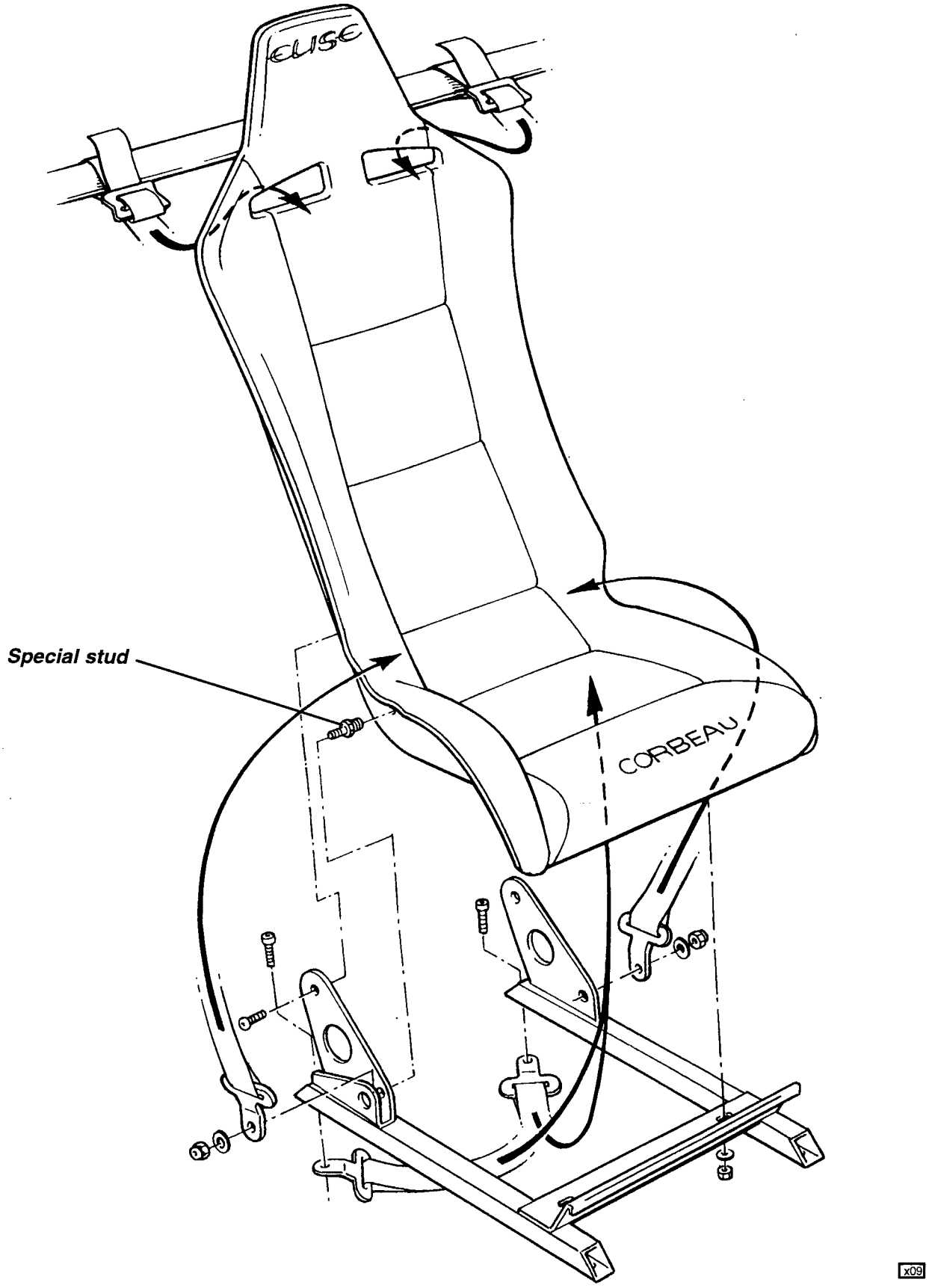

XA.4 - ROLL-OVER BAR COMPETITION REINFORCEMENT KIT

This kit is designed to provide additional bracing to the roll-over bar for competition use, and allow the fitment of the 6-point competition seat belt harness (see sub-section XA.2). The standard 3-point inertia reel seat belts cannot be used with this kit. Note that the roll bar fairing and audio speaker panels must be removed or modified, and that some drilling of the chassis is required to fit the forward bracing strut.

Description	*Part Number*	*Qty*
Roll-Over Bar Competition Reinforcement Kit, LHD	**A111A0245S**	**1**
Roll-Over Bar Competition Reinforcement Kit, RHD	**A111A0246S**	**1**
Comprising:		
'A' Frame, roll-over bar reinforcing	A111A0234S	1
Bolt, 7/16" UNF x 25, 'A' frame to roll bar base	A111W2183F	2
Washer, 7/16" " " " "	A075W4029F	2
End Spigot, harness bar to roll bar	A111A0224S	2
Bolt, M10 x 75, end spigot to roll bar	A075W2059Z	2
Washer, M10 " " "	A075W4037Z	2
Bolt, M8 x 50, harness bar and bracing bar to end spigots	A079W1044F	4
Washer, M8 " " " " " "	A075W4079F	4
Nut, M8 " " " " " "	A907E6284F	4
Bracing Strut, roll bar to footwell	A111A0239S	1
'U' End Spigot, brace to roll bar, RHD/LHD	A111A0226/7	1
Bolt, M12 x 80, 'U' end to 'A' frame	A082W2157F	1
Washer, M12 " " "	A082W4154F	1
Corner Plate, bracing strut to floor, RHD/LHD	A111A0237/8S	1
Reinforcing Plate, corner plate to floor	A111A0244S	1
Screw, M8 x 20, pan pozi, corner plate to floor	A075W5095F	2
Washer, M8 " " " " "	A075W4079F	2
Nut, M8, " " " " "	A907E6284F	2
Setscrew, M8 x 16, corner plate to chassis side rail	A075W1036Z	2
Washer, M8 " " " "	A075W4079F	2
Nut, M8, " " " "	A907E6284F	2
Grommet, chassis side rail access hole	A111A6003F	1

Fitting Procedure

1. If fitted, remove the following:
   - Roll bar fairing and rear window;
   - Both audio speaker panels;
   - Both inertia reel lap and diagonal seat belts;
   - Passenger footrest

2. Remove the end spigots from the 'A' frame harness bar, and fit the 'A' frame into position. Locate each bottom end of the frame with a hex. head bolt and washer to the existing inertia reel fixing point.

3. Insert the end spigots into each end of the harness bar, and fit the fixing bolts to the roll hoop and harness bar. Tighten the 'A' frame bottom fixings to 33 Nm, the harness bar end spigots to roll hoop to 45 Nm, and the harness bar to end spigot through bolts to 22 Nm.

4. Remove the nut and washer from the passenger side front lower wishbone rearmost pivot bolt, and fit the bracing strut corner plate over the end of the pivot bolt into the corner of the footwell. Mark the four fixing hole positions in the corner bracket against the chassis before removing the bracket and drilling the marked holes 9 mm diameter.

5. For access to the corner plate fixings inside the chassis side rail, it is necessary to cut an access aperture in the underside of the chassis rail. With a centre marked as shown in the diagram, use a hole cutter or similar tool to cut a 35mm diameter hole and remove the sharp edge.

6. Fit the corner plate fixings, using the reinforcing plate on the underside of the floor, and tighten the fixings in the following order:
   - Wishbone pivot bolt; 45 Nm **at normal ride height**
   - M8 fixings; 22 Nm

7. Fit the access grommet in the chassis side rail underside.

8. Slide the 'U' end spigot onto the bracing strut, and engage the bracing strut front end into the corner plate at the same time as positioning the 'U' bracket over the roll hoop and 'A' frame apex. Fit and tighten the bolt clamping the 'U' bracket to the 'A' frame.

9. Mark the position of the top and bottom holes in the 'U' bracket and corner plate tubes against the strut spigots. Release the 'U' bracket from the 'A' frame and hoop, and withdraw the bracing strut. Drill the marked holes in each spigot to 9 mm diameter. Refit the bracing strut and 'U' bracket, and insert the M8 x 50 bolts through each strut end spigot. Tighten the M12 'U' bracket to 'A' frame fixing bolt to 77 Nm and the M8 end spigot bolts to 22 Nm.

10. Fit the 6-point seat belt harnesses as detailed in sub-section XA.2

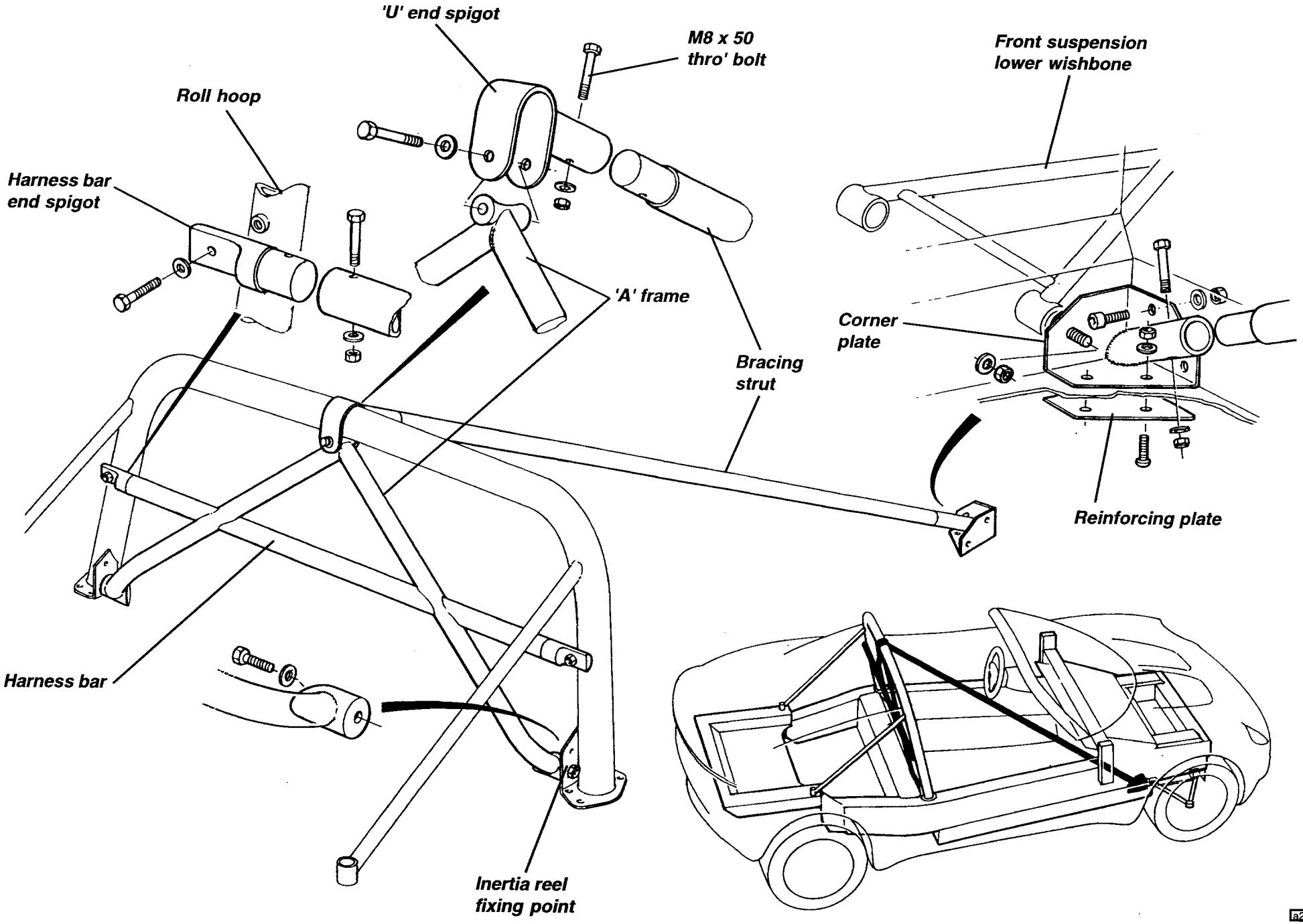
'U' end spigot
M8 x 50
thro' bolt
Front suspension
lower wishbone
Roll hoop
Harness bar
end spigot
'A' frame
Corner
plate
Bracing
strut
Reinforcing plate
Harness bar
Inertia reel
fixing point

XA.5 - HAND HELD FIRE EXTINGUISHER - A111T0002S

Recommended Fitting Instructions

It is recommended that this extinguisher is mounted ahead of the passenger seat, fixed to the cockpit floor crossmember as detailed below:

1. Mark the positions of the two fixing holes in the crossmember as shown in the diagram.

2. Drill the two holes 9.0 mm diameter through only the top surface of the crossmember.

3. Insert the two Rivnuts and use an M6 threaded puller tool, or appropriate M6 slave screws to crimp the two Rivnuts into position.

4. Fit the extinguisher mounting bracket using the two countersunk M6 screws provided, and clip in the extinguisher.

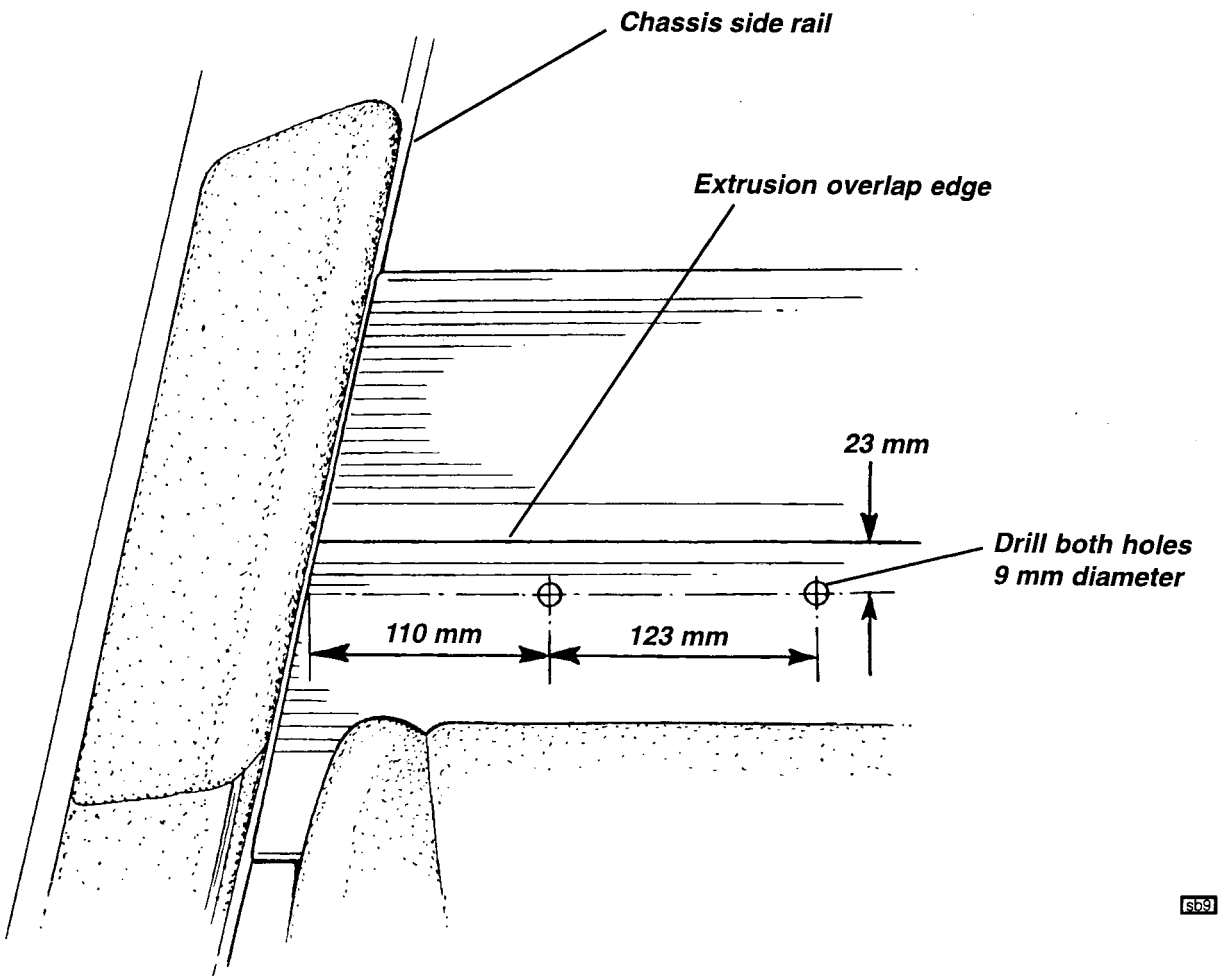

XA.6 - PLUMBED IN FIRE EXTINGUISHER KIT - A111T0004S

The illustration overleaf shows the suggested layout of this fire extinguisher kit for use in the Lotus Elise.

- The bottle is secured to the passenger floor crossmember using threaded inserts.
- A release handle is mounted in the fascia, and externally on the front wing.
- Extinguisher nozzles are mounted in the cockpit and at both sides of the engine bay.

Pay close attention to any fitting instructions supplied with the kit, and check any specific requirements of competition events.

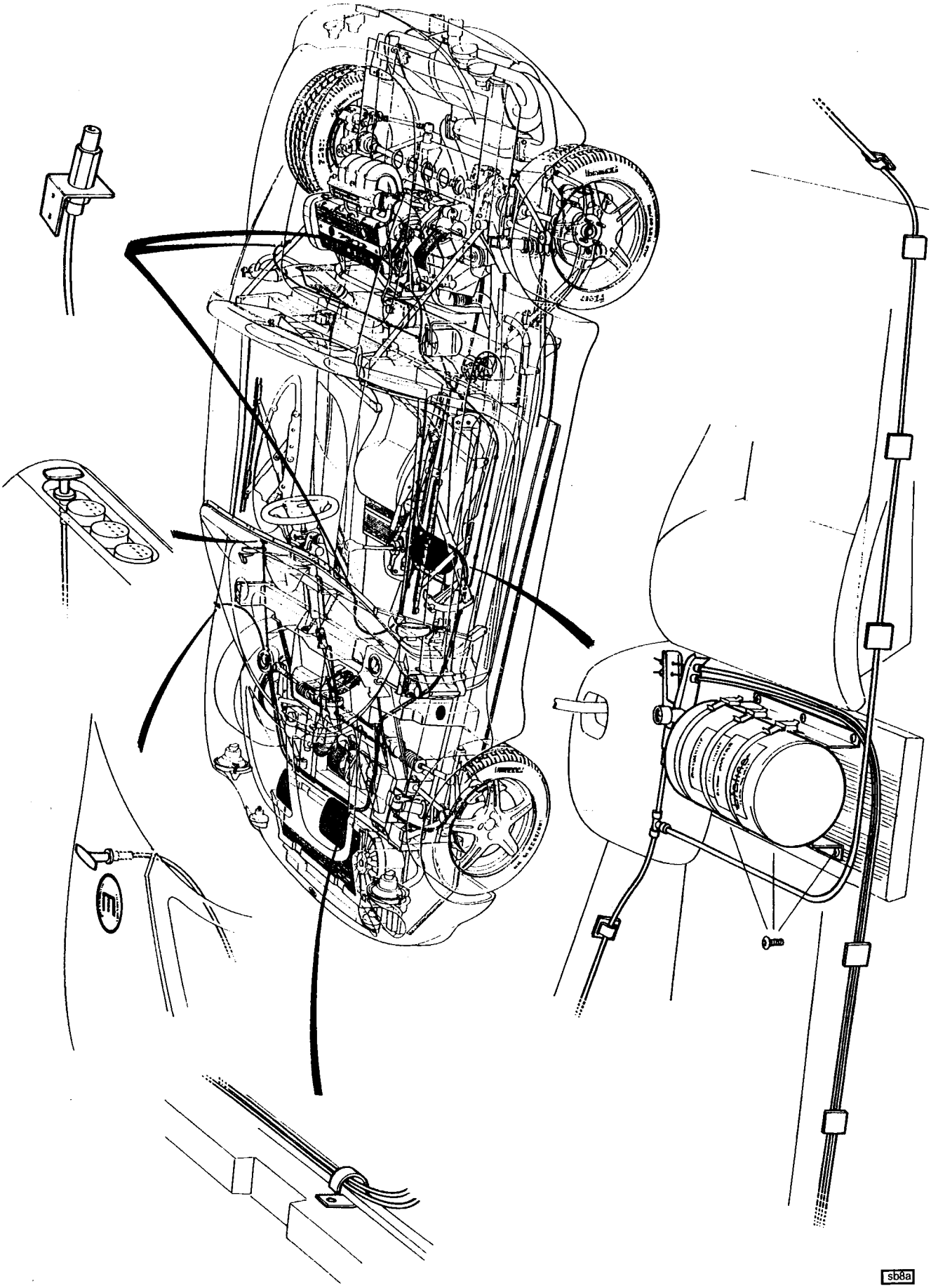
sb8a

XA.7 - UNIBALL TOE LINK KIT - A111D0127S

For competition use, especially if slick tyres are to be used with the associated increase in suspension loadings, it is recommended to replace the rear suspension toe control links with uniball type links, complete with brackets which support both ends of the pivot bolts, and provides additional strength to the chassis and hub carrier fixings. This kit is designed to be used in conjunction with the Road Spring & Damper Set A111C0138S, using the lowered ride height (100/110mm) as detailed in sub-section XA.8. The correct bump steer characteristic is not attainable at the standard ride height.

At the inboard, chassis, end of the link, a steel bracket supports the rear end of the pivot bolt, and requires that the chassis be drilled to accept the four M6 screws fixing each of the brackets. Locate the bracket using the pivot bolt before marking up the four fixing hole positions on the chassis rear subframe. At the outboard end of the link, a milled aluminium bracket is bolted to the bottom of the hub carrier, utilising two of the lower ball joint plinth fixings. The pivot boit uses a sliding sleeve in the lower leg of the bracket to avoid any bending stress in the bracket when the bolt is tightened. Note that each side of each of the Uniball joints must be faced by the smaller end of a conical washer in order to allow full articulation of the joint.

A stack of six shim washers is provided at the outboard end of the link, to be distributed above and below the Uniball in order to adjust the joint height and attain the desired bump steer characteristic. The default setting of the stack is for one washer above the joint, and five below, but for fine tuning of the toe curve refer to Service Notes sub-section XA.8.

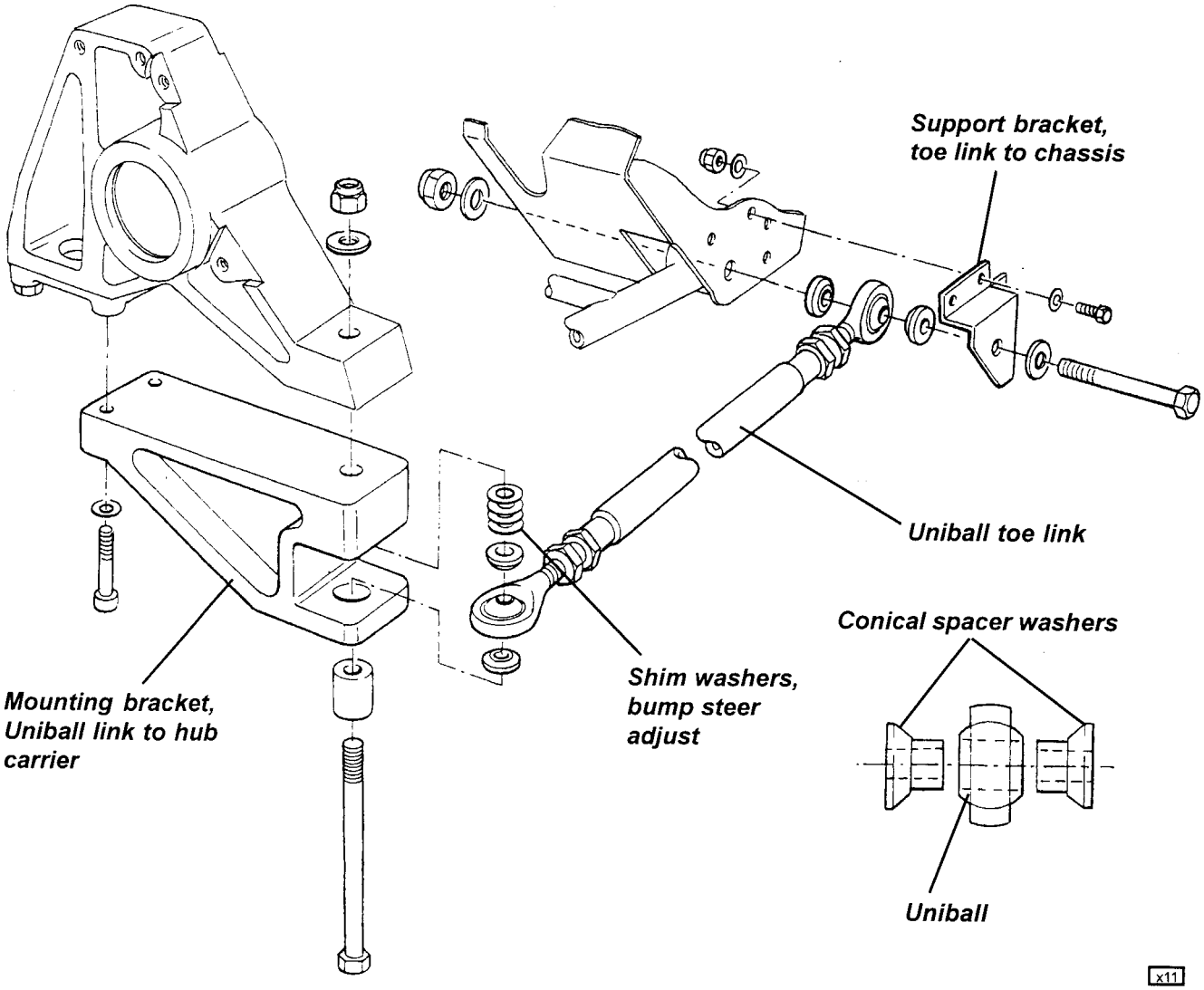

XA.8 - ROAD SPRING & DAMPER SET - A111C0138S

Road springs and dampers are available as a vehicle set, designed to be used with a lowered ride height for track use. The front springs are uprated from 27.5 N/mm to dual rate 25/40 N/mm springs, and the rears are uprated from 40 to 50 N/mm. All four fixed calibration Koni dampers are both stiffer and shorter and feature different bump stops and adjustable spring platforms (without lock rings) to allow setting of ride height and corner weighting. Also included, for use on cars prior to their introduction at VIN W 3580 (approx.), are stronger top rear damper mounting brackets with repositioned (10mm higher) damper holes, together with load spreading clamp plates to fix the brackets to the chassis. The pair of steering rack positioning plates are provided in order to maintain the desired bump steer characteristic if the lowered ride height is used.

Additional parts recommended to be fitted with this kit are:

- Front hub bearing clamp bolt set - A111C0137S (applicable to cars prior to VIN: V 1830 - Sept.'97)
- Rear Uniball toe link kit - A111D0127S.
- Adjustable, uprated front anti-roll bar - A111C0134S.

The springs, dampers and rear top damper mounting brackets with spreader plates, are direct replacements for the standard parts. The dual rate front springs are fitted with the close coiled end lowermost. The recommended mid-laden ride height (2 people, 1/2 tank fuel) to be used with these springs and road tyres is as follows:

Front: 100 mm below front end of chassis siderail (standard setting 140 mm).
Rear: 110 mm below rear end of chassis siderail (standard setting 140 mm).

At the lowered ride height, the steering rack should be repositioned by removing the rack fixings from the front of the footwells, drilling out the pop rivets retaining the standard (5 notch) rack height setting plates, and fitting new (10 notch) plates A111H0021F. Refit the rack fixings using a suitable threadlocking compound, and torque tighten the M8 bolts to 27 Nm, and the M10 bolts to 45 Nm.

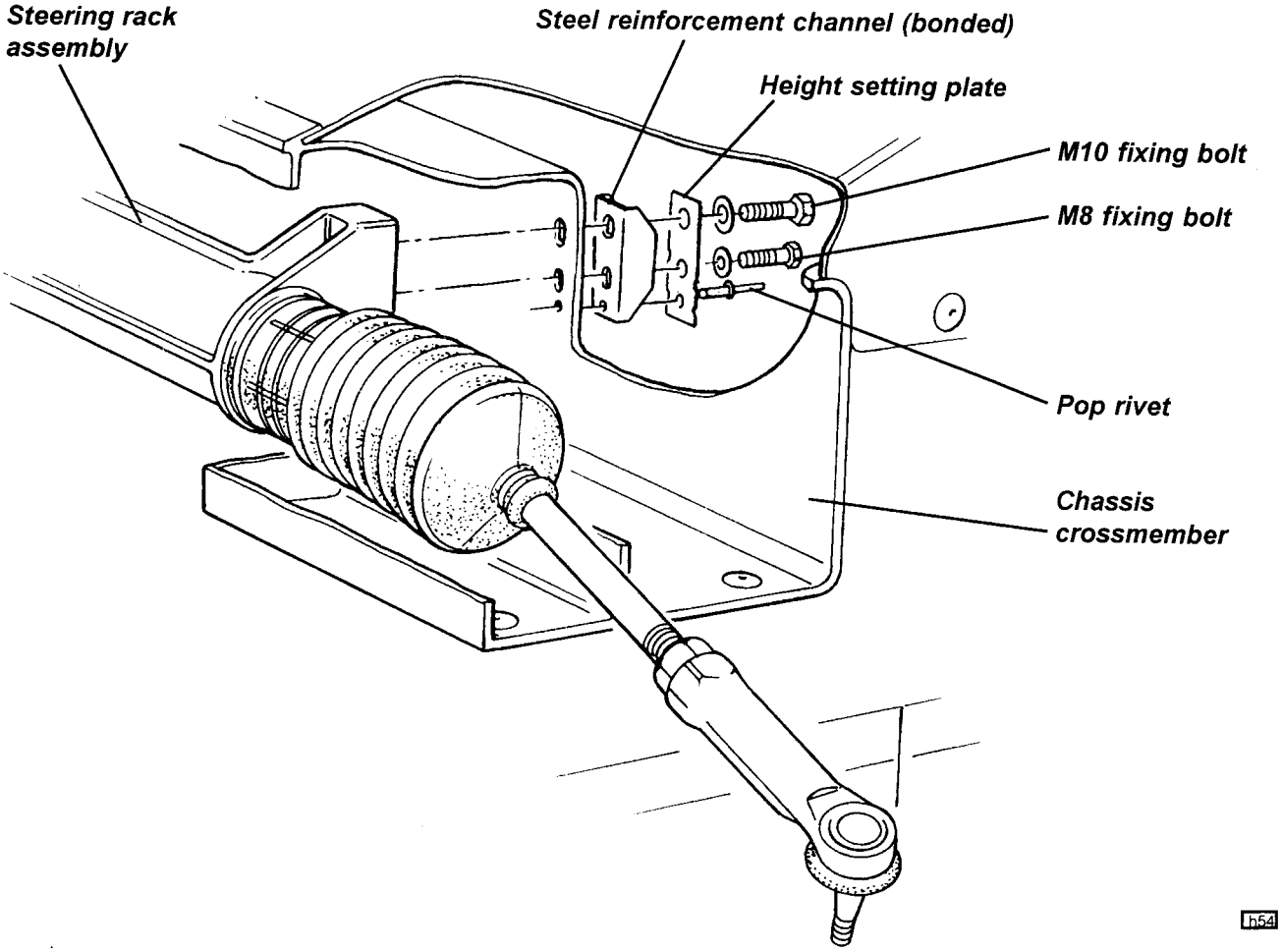

At the lowered ride height, the suspension geometry should be set as follows:

Subject	Specification	Tolerance	Max. difference side/side
Front Camber:	- 0.3° (std. ride height: - 0.1°)	+ 0.1°, - 0.2°	0.2°
Front Caster	+ 3.8°	± 0.2°	0.2°
Front Toe	0.2 mm **toe out overall**	- 0, + 0.2 mm	
Rear Camber*	- 2.0° (std. ride height: - 1.8°)	± 0.2°	0.2°
Rear Toe	1.2 mm **toe in each side**	- 0, + 0.2 mm	0.2 mm

* In extreme cases, it may be necessary to machine the top ball joint plinth in order to attain sufficient negative camber.

Rear Bump Steer

The rear suspension toe-links are designed to steer the rear wheels in incremental amounts as the car rolls with cornering forces, in order to produce the required handling characteristics. The general requirement is for the outside wheel to adopt a small amount of toe-in as it moves towards bump with roll.

A shim stack is provided at the outboard end of the toe-link, by which the joint height, in relation to the wishbone pivots, may be adjusted. A basic stack dimension detailed below, will provide an approximately correct geometry, but in order to optimise the characteristic, accurate individual wheel alignment equipment (or a dedicated bump steer gauge) must be used to measure the toe change for each rear wheel. Lowering the joint height by 0.9 mm (1 shim washer) will increase the toe-in at 40 mm bump travel by approx. 0.2 mm. Refer to the graph below, and select a shim stack to provide a toe change on bump travel to lie within the tolerance band. Note that if the Uniball toe link is used, the shim stack is distributed above and below the joint.

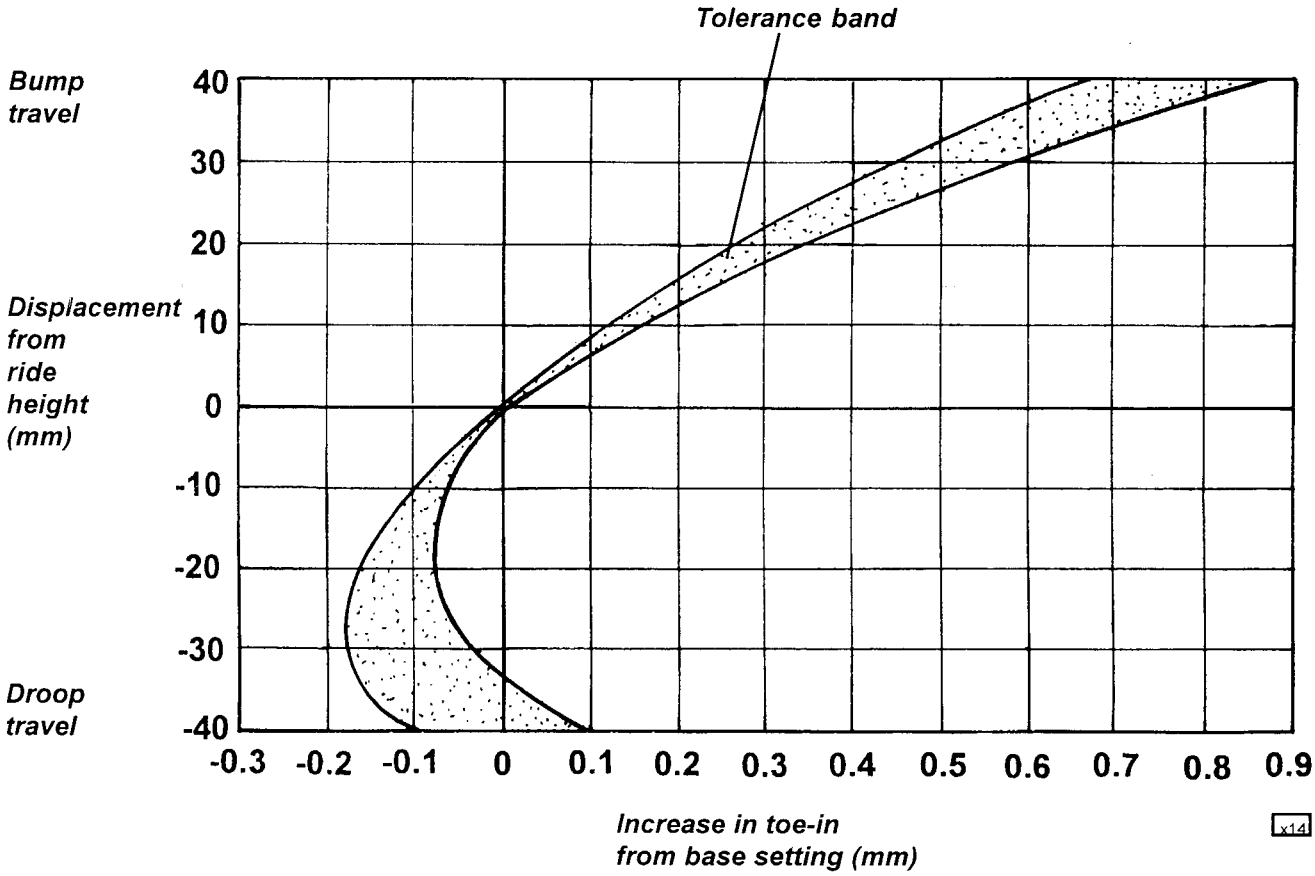

Base Setting

Standard toe link with female threaded pivot balls*:	4 x 1 mm shim washers
Standard toe link with integral stud ball joints:	3 x 1 mm shim washers
Uniball toe link:	3 x 1 mm shim washer above joint

When changing ride height, the length of the toe link will need to be adjusted to maintain the specified rear toe setting, but the base setting of the shim washers is the same for standard (140mm) and race (100/110mm) ride heights.

*** Note**

The standard toe-link with female threaded pivot balls requires a very specific assembly configuration with different bolt lengths and washers used for different shim pack thicknesses. Refer to sub-section DE.4 for full details. If a car with this joint type is found to require more than 5 shim washers to produce the required characteristic, both outboard ball joints should be changed for the integral stud type, or Uniball links fitted.

XA.9 - FRONT HUB CLAMP BOLT SET - A111C0137S

This set is applicable only to cars built before Sept.1997 (approx. VIN W 1830) with M12 front hub clamp bolts.

If the car is to be used in a competition environment with the associated high level of chassis loading, it is recommended to replace the front hub bearing M12 clamp bolts with an M16 clamp bolt set including thrust washers, which allows a substantial increase in the clamping force applied to the inner bearing races. Cars from the above change point have been factory built with the M16 bolt set.

Kit Contents	*Part no.*	*Qty*
Front Hub Clamp Bolt Set	A111C0137S	1
comprising:		
Bolt, M16 x 100, bearing clamp	A111W2185F	2
Nut, M16 Nyloc, bearing clamp bolt	A111W3159F	2
Thrust Washer, outer	A111C0117F	2
Thrust Washer, inner	A111C0118F	2
Dust Shield, front wheel bearing	B111C0076F	2
Washer, M16x30x2	A111W4171F	2

The M16 clamp bolt set is a direct replacement for the M12 set, and it is recommended that at the time of fitting, the hub is removed from the bearing and the condition of the hub spigot carefully examined. If any signs of bearing inner race movement on the hub are evident, the hub and bearing should be renewed and assembled with the new bolt set.

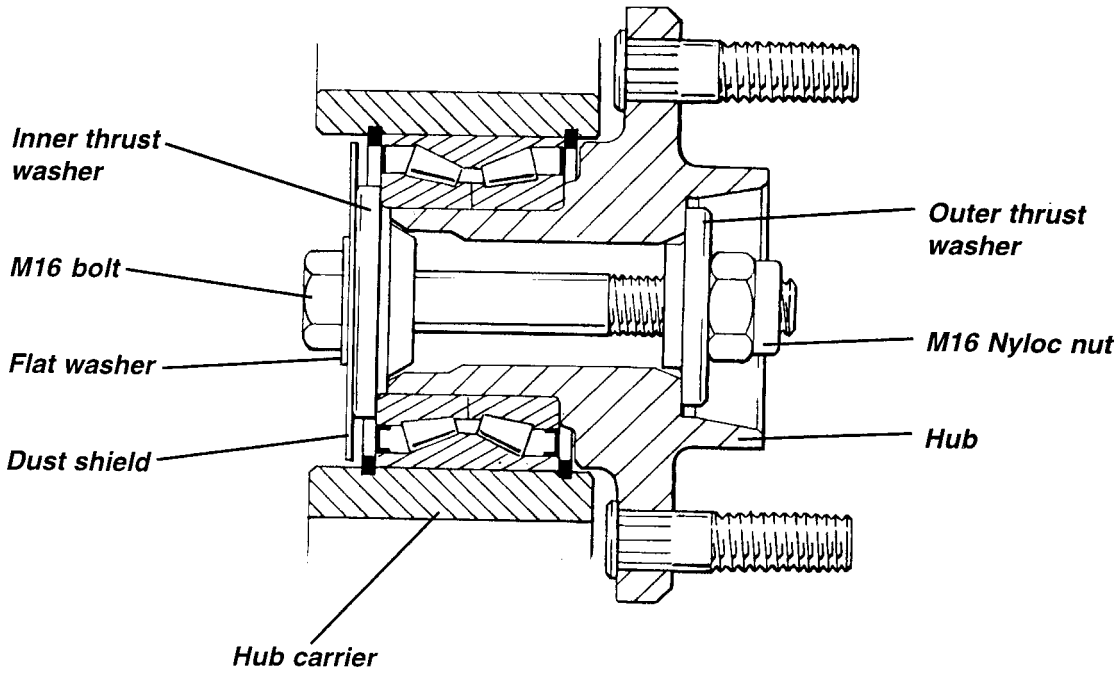

The replacement procedure is detailed in Elise Service Notes sub-section CG.4, but also note the following points:

a) The M12 bolts are handed - RH thread on RH side, LH thread on LH side. The M16 bolts are not handed, but use a higher torque setting of 210 Nm (previously 77 Nm).

b) The assembly configuration is as shown in the illustration, with the bolt head and dust shield on the inside, and the nut on the outside. Note that the plain washer is fitted between the bolt head and dust shield.

XA.10 - ADJUSTABLE FRONT ANTI-ROLL BAR - A111C0134S

For competition use, a stiffened tubular front anti-roll bar (14 gauge wall thickness replaces 17 gauge) is available which also provides a 5 hole choice of drop link attachment. The bar is a direct replacement for the standard bar, but must be used in conjunction with the Nylon block type chassis mountings, not the later bonded rubber mounts introduced in March '98. For later cars, discard the rubber mountings and order separately the Nylon mountings and associated fixings.

Notes:
- The 'top hat' spacer bush in the Nylon block should be fitted with the flange abutting the chassis.
- Lubricate the bar to Nylon block using MoS_2 grease.
- Tighten the wishbone pivot bolt and anti-roll bar drop links to 45 Nm.

Lower Wishbone Front Pivot Detail

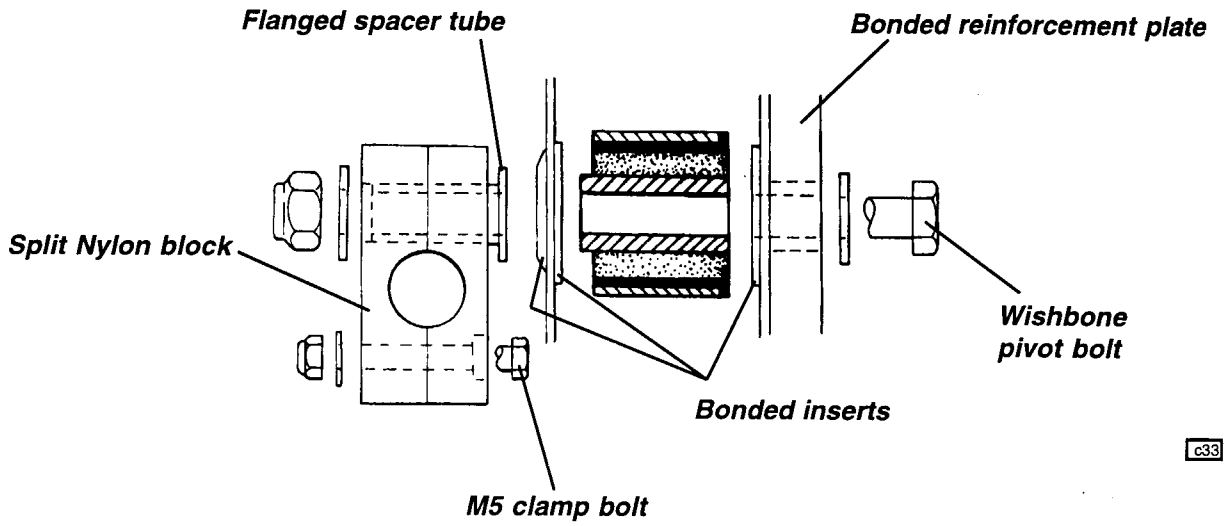

Drop Link Detail

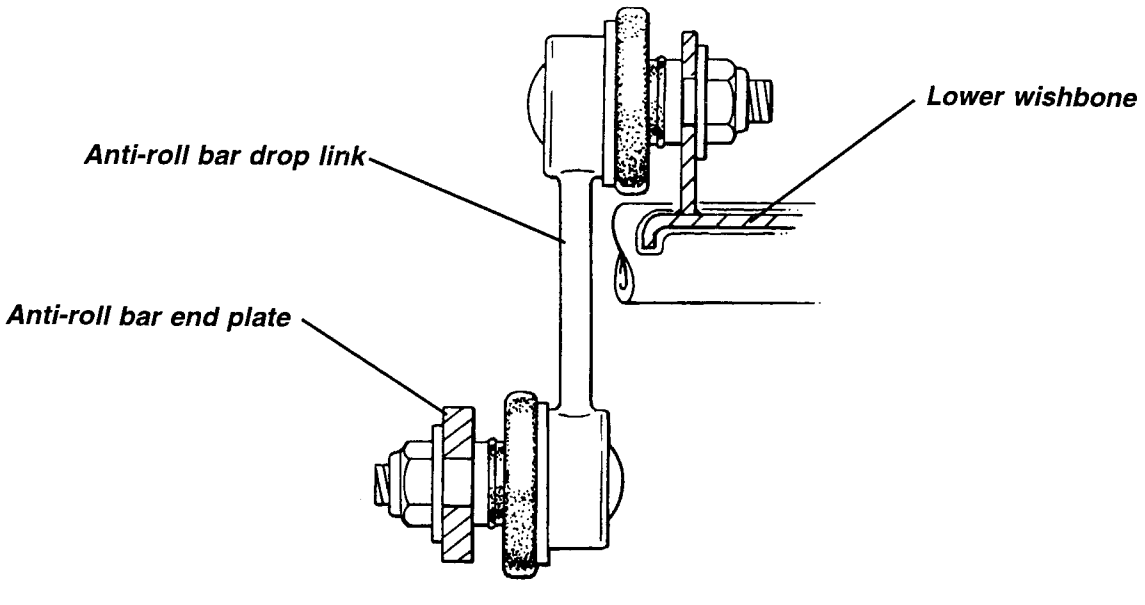

XA.11 - OIL COOLER KIT - A111K0037S

The oil cooler kit is recommended for use with the 190 VHPD engine, and includes a 9 row cooler mounted to the front crash structure beneath the radiator duct, into the floor of which are cut air feed holes, with air exhausting from the oil cooler via an aperture in the revised front undershield. The oil cooler feed and return hoses are routed from a new oil filter housing via the RH sill and front wheelarch.

Oil Cooler Kit Contents

Description	*Part no.*	*Qty*
Oil Cooler Kit	A111K0037S	1
comprising:		
Oil Cooler	A111K0036F	1
Oil Filter Housing	A111E6146F	1
90° Connector, oil pressure switch	A111E6147F	1
Hose, oil cooler feed	A111K0035F	1
Hose, oil cooler return	A111K0034F	1
Mounting Bracket, oil cooler	A111K0032F	1
Duct, oil cooler	A111K0039F	1
Undertray, front	A111B0400F	1
Convolute Hose Protector	A082V7779V	300mm
Grommet, cooler hose	A079U6033F	4
Miscellaneous Fixings		-

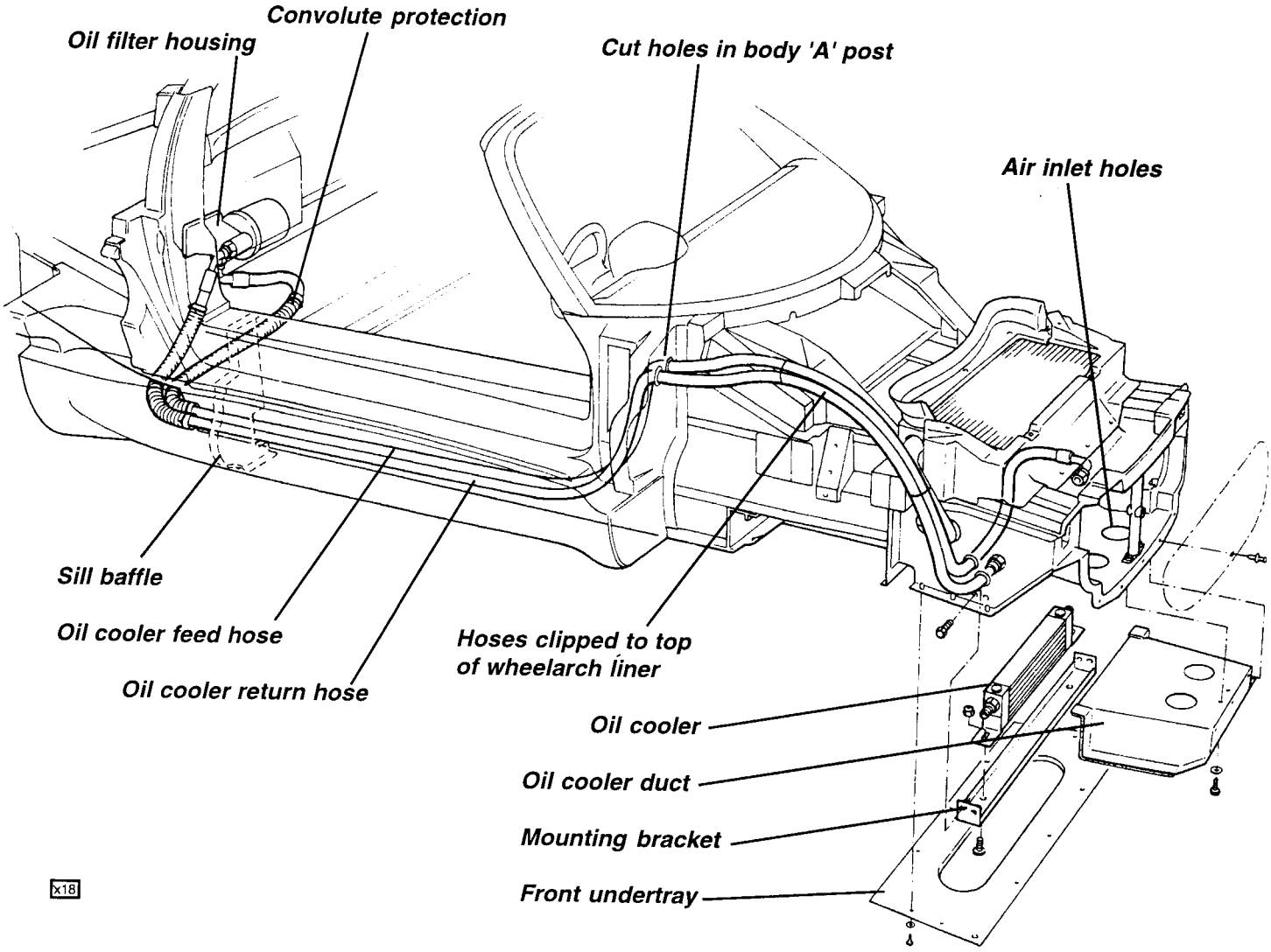

x18

Fitting Procedure

1. Replace the oil filter housing on the engine with the new housing which incorporates feed and return ports for the oil cooler hoses. Transfer the oil filter canister. Fit the new blanking plug into the tapped hole in the top of the housing. Using a thread sealant, screw the new adaptor elbow into the tapped hole on the underside of the housing, and from the old filter housing, transfer the brown bodied oil pressure switch into the elbow. Note: i) If a new VHPD engine is being fitted, tie back the unused black coloured harness connector (oil pressure gauge transducer). ii) If the old oil pressure switch is the later, post Jan.'98 parallel thread type, the earlier type tapered thread switch must be ordered and fitted - A111E6099S.

2. Remove the front clamshell and undertray. Mark up and cut the air inlet holes in the floor of the crash structure as shown in the diagram, and also the hose routing holes in the RH side of the structure. Fit grommets into the hose routing holes.

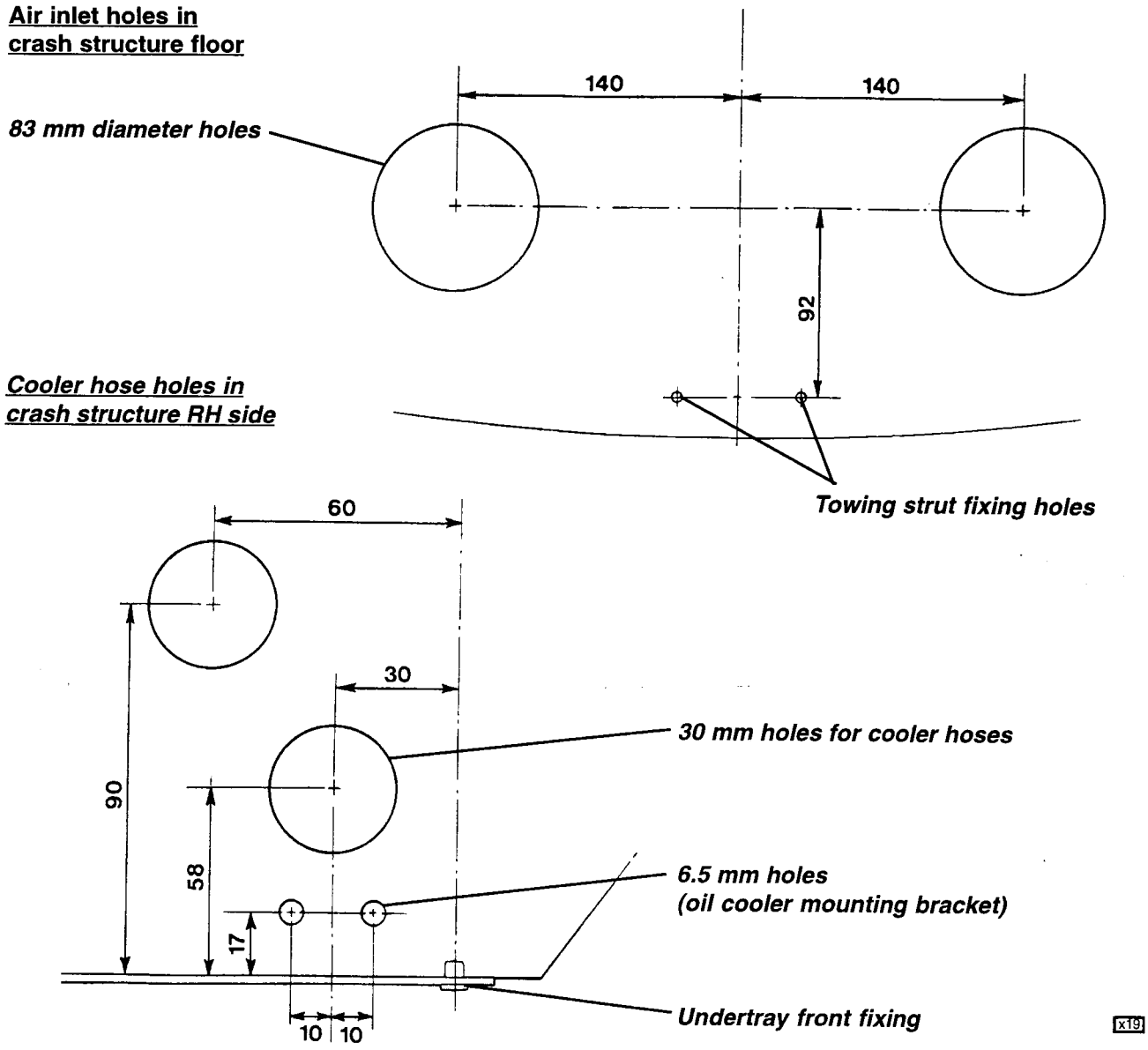

3. Remove the lower centre three fasteners for the radiator air intake grille, and fit the oil cooler air intake duct to the underside of the crash structure using the two fixings a the bottom of the towing eye strut. Rifit the grille fixings. Apply foam strips to each bottom flange of the duct.

4. Fit the oil cooler radiator to its mounting channel using the two thin head screws, and position the assembly beneath the crash structure, against the rear end of the intake duct. Mark up and drill two M6 clearance

holes in each side of the crash structure for the cooler mounting channel fixings, and secure the channel.

5. Mark up and cut the two oil cooler hose routing holes in the front face of the body RH 'A' post as shown in the diagram. Remove the coin tray from the front of the driver's door sill. With the aid of an assistant, feed the two hoses through the body sill from front to back, using access via the coin tray aperture and open rear end of the chassis rail. First feed the right angle hose union through the sill baffle aperture before feeding through the straight union on the second hose.

Cooler hose holes in 'A' post front face

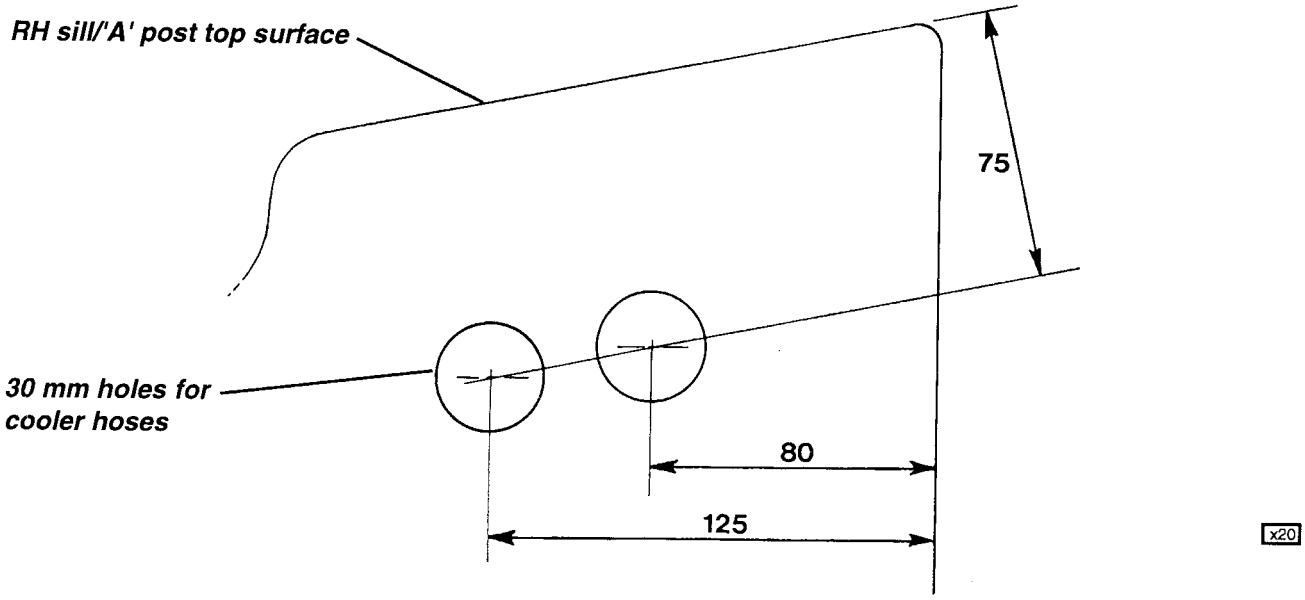

6. Use convoluted hose protection at the rear end of both hoses where they exit the sill area, connect the hoses to the unions on the oil filter housing, and tie strap to the adjacent water hose, and/or together as necessary. Fit a grommet onto each hose and locate in the 'A' post holes.

7. Feed the hoses through the side of the crash structure, and fit the grommets into the holes.

8. Connect the hoses to the oil cooler and secure the LH hose the the centre rib on the crash structure using a 'P' clip.

9. Fit the front topshell and secure the two hoses around the top of the wheelarch liner using 'P' clips before fitting the liner.

10. Disable the ignition and crank the engine to fill the oil cooler and pipes before starting the engine. Check the hose connections for leaks before fitting the new front undertray with the swaged aperture pointing downwards.

XA.12 - BATTERY ISOLATOR SWITCH KITS

This dual pole flick switch is mounted in the cabin and operates the ignition circuit directly, and via a relay in the battery compartment, all other battery services. An alternator dump resistor is incorporated to protect the alternator from damage. In addition, external operation of the switch is provided for by a Bowden cable link from a pull handle located in the topshell near the windscreen base.

Contents of Kit

Battery Isolator Switch Kit (prior intro. of revised harness)*	A111M0128S	1
Battery Isolator Switch Kit (from intro. of revised harness)*	A111M0129S	1
comprising:		
Switch Box Assembly (prior revised harness)	A111M0126S	1
Switch Box Assembly (revised harness)	A111M0125S	1
Master Switching Relay	A111M6087S	1
Bowden Cable	A111M6088S	1
Battery Positive Link Cable	A111M0109S	1
Miscellaneous Parts	-	

* New harness introduced at VIN: W 1941. Plus; 1920, 1926, 1937, 1938. Less; 1965, 2002.

Component Siting

1. Switch Box Assembly: Position the switch box on the car centreline (or offset if plumbed-in fire extinguisher system is fitted) beneath the dash, mark up the two pre-drilled holes in the box against the dash, and drill the dash to secure the box using two self tapping screws A075W5014Z. Route the harness alongside the main harness and through the bulkhead grommet to the front of the battery well.

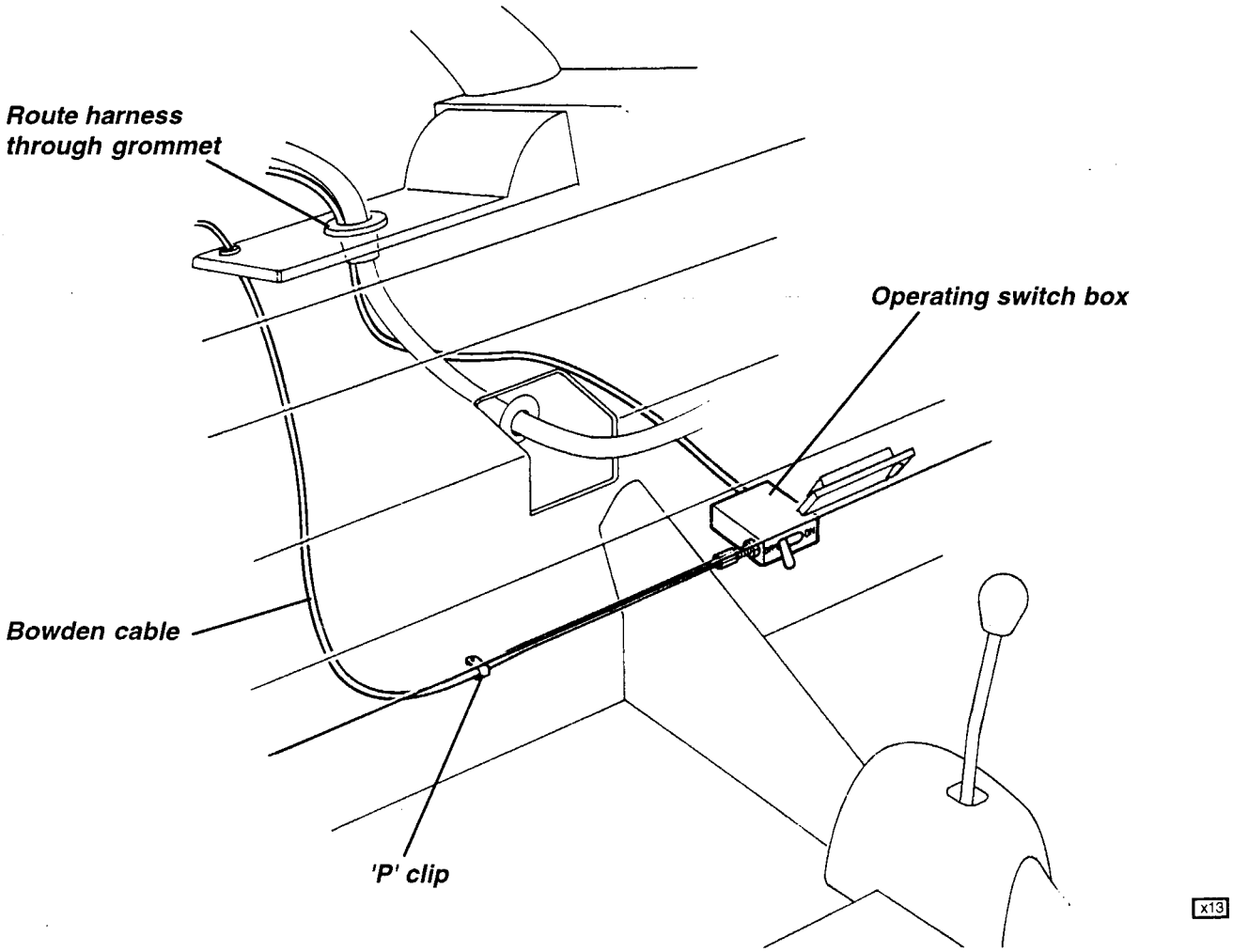

2. Master Switch Relay: Using one existing Pulsert in the battery well, mark up and drill a second fixing hole 9mm diameter and fit an M6 Pulsert A079W6156F. Secure the relay using two M6 screws, with a 'P' clip located under one of the fixings to carry the alternator dump resistor.

3. Drill the topshell 13 mm diameter in the position shown to locate the Bowden pull cable. Fit the cable handle and route the cable through the front compartment and plastic bulkhead cover to the operating switch housing. Fit the inner cable through the hole in the switch lever and fix the outer cable adjuster in the casing. Secure the cable to the dash underside with a 'P' clip as shown.

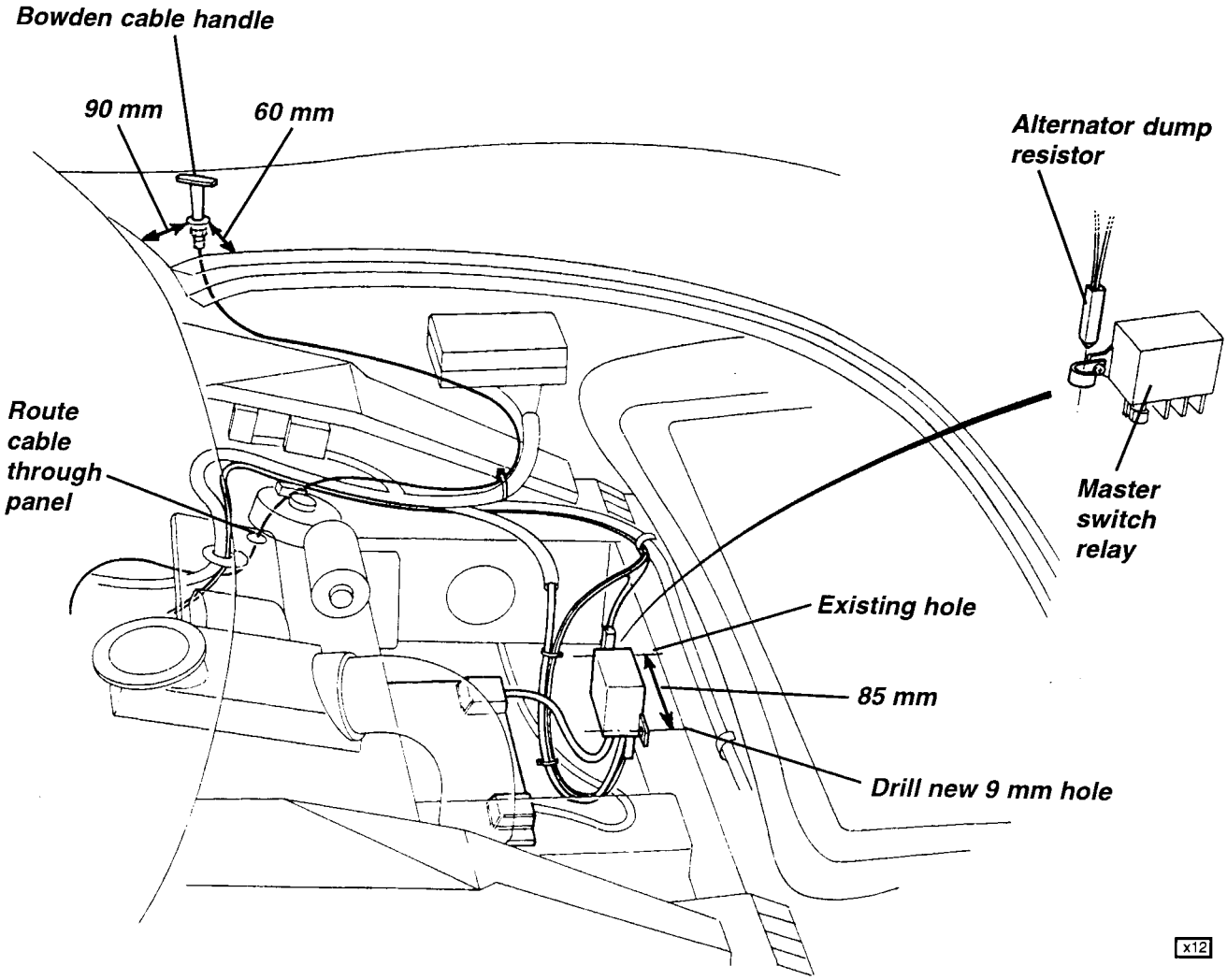

Electrical Connections

1. Disconnect battery (negative cable first).

2. Replace existing 8mm eyelets on battery positive cables with 6mm eyelets using crimp and solder techniques.

3. Fit new masterswitch (relay) into the battery well as shown in the illustration, and attach the positive cables to one of the switch terminals.

4. Fit the new battery positive link cable (A111M0109F) from the other masterswitch terminal to the battery.

5. *Prior to revised harness:*
   - Unwrap the main harness at an area 175 mm from the fusebox to locate splice 'D' where 4 white cables are joined. Identify the *thin* white cable to the rear of the splice. Cut this cable 100 mm from the splice, and

to one of the ends, use splice crimp, solder and heatshrink, to connect the new green 1.0 mm wire leading to the new fuse holder to be attached to the side of the main fusebox and equipped with a 10A fuse.
- Insert into the other cavity of the new fuseholder, the terminated green wire from the new switchbox.
- To the remaining end of the cut white cable, splice crimp, solder and heatshrink the unterminated green wire from the new switchbox.

With revised harness:
- Release the main fusebox fixings, remove fuse 7, and extract the green cable from cavity 7B. Cut off the terminal from this cable and use splice crimp, solder and heatshrink to connect with the unterminated green cable from the new switchbox.
- Insert the terminated green wire from the new switchbox into the vacated fusebox cavity 7B.
- Replace fuse 7 (10A) and refit the fusebox.

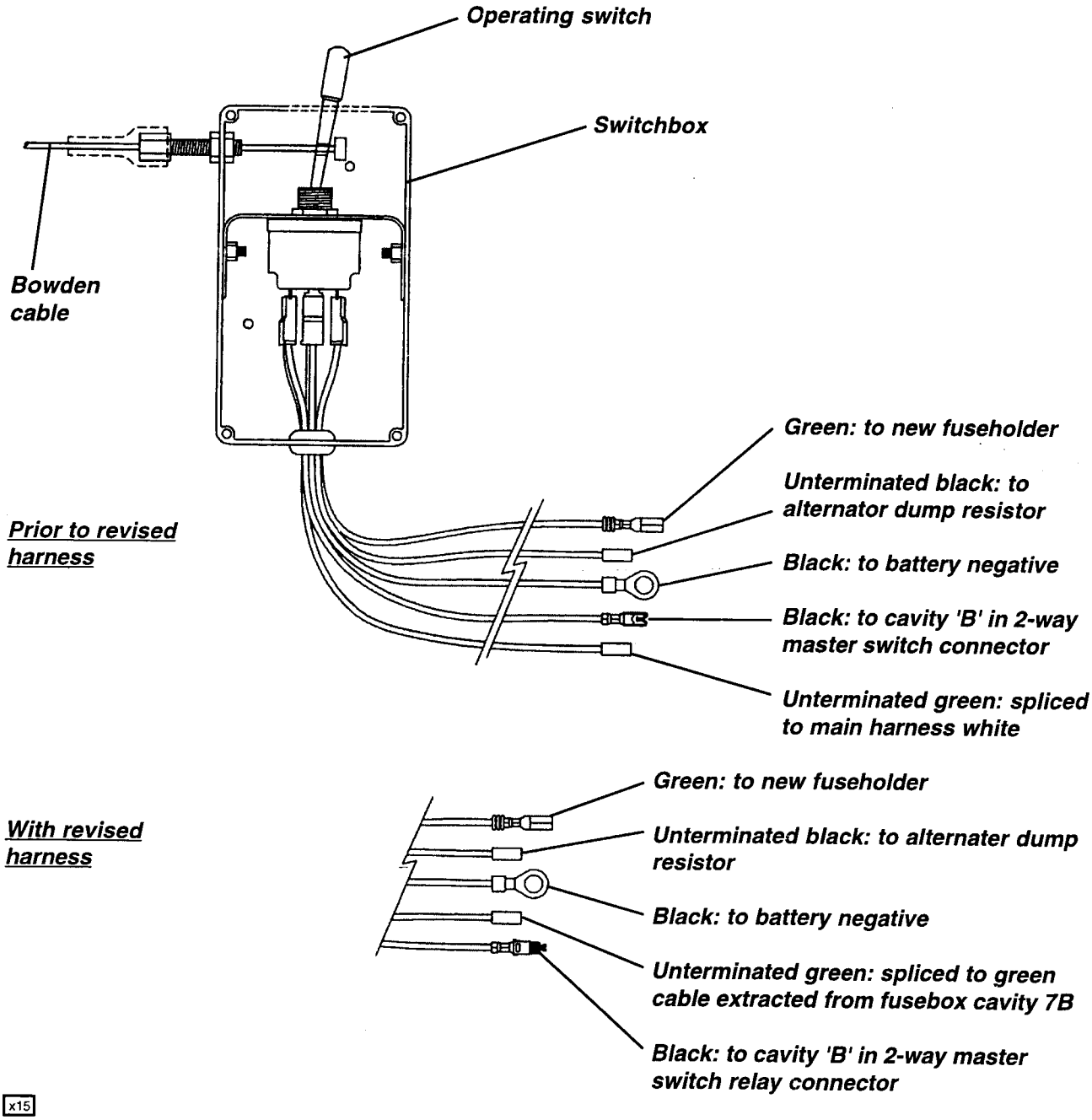

x15

6. Use splice crimp, solder and heatshrink to connect the new red (2.0 mm) wire to the alternator dump resistor, and connect the other end to the master switch relay terminal with the other re-terminated battery positive cables.

7. Use splice crimp, solder and heatshrink to connect the unterminated black wire from the operating switch to the remaining wire on the alternator dump resistor. Locate the resistor in its 'P' clip by the side of the master switch relay.

8. At the master switch relay small two way connector, use the new red (0.75 mm) wire to connect cavity 'A' to the master switch terminal with the battery positive link (A111M0109F) attached.

9. Insert the terminated black cable from the operating switch into cavity 'B' of the two way connector on the master switch relay.

10. Connect the ring terminated black cable from the operating switch to the battery negative terminal.

11. Reconnect battery.

12. If the car is to be used in competition and the passive immobilisation system is required to be disabled, extract the two purple and white cables from the Lucas 5AS module harness connector, and tape back.

NOTE
When the ignition is turned off, ensure also that the operating switch is turned off, as otherwise a battery drain will occur via the energised master switch relay.

Circuit diagram - Prior to revised harness

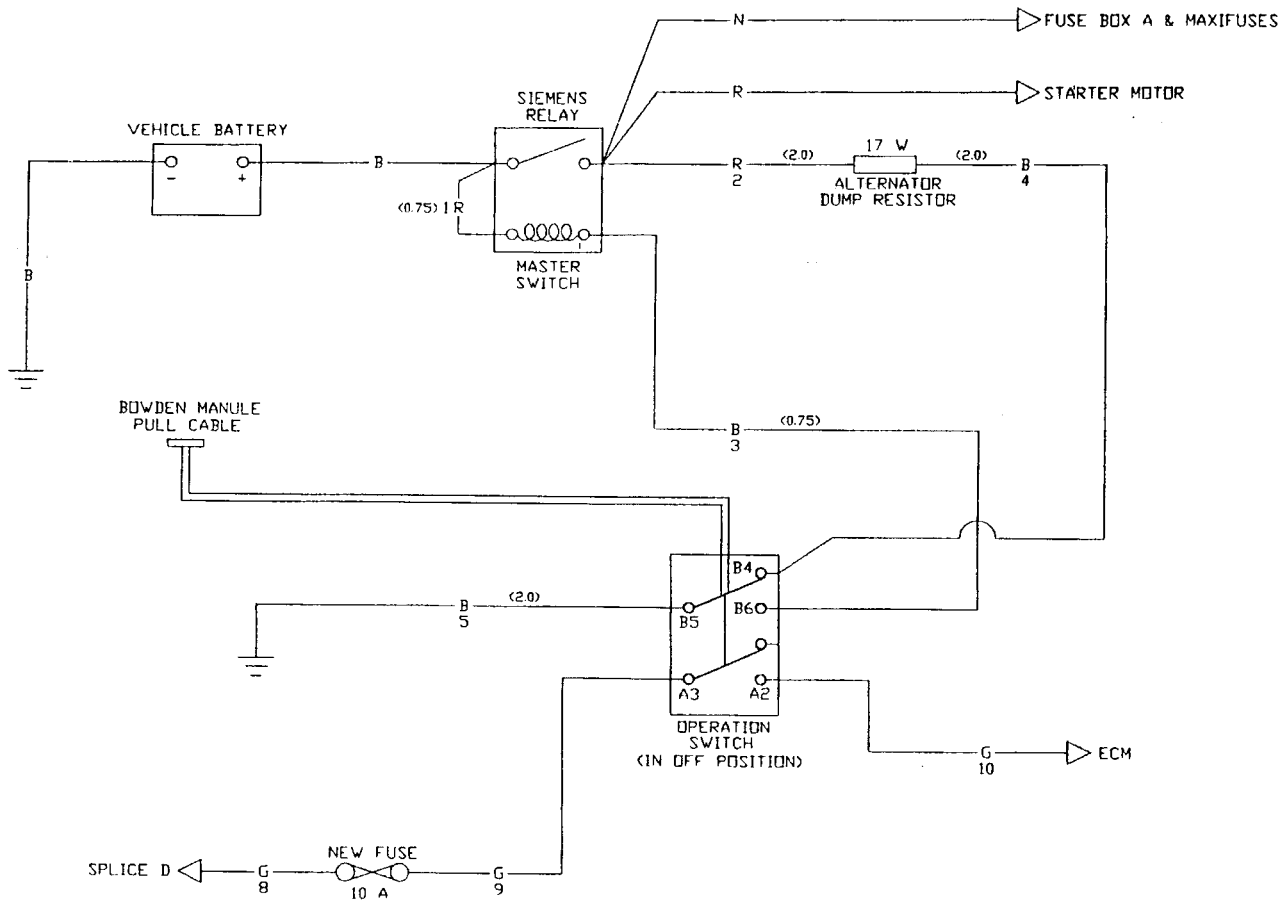

Circuit diagram - With revised harness

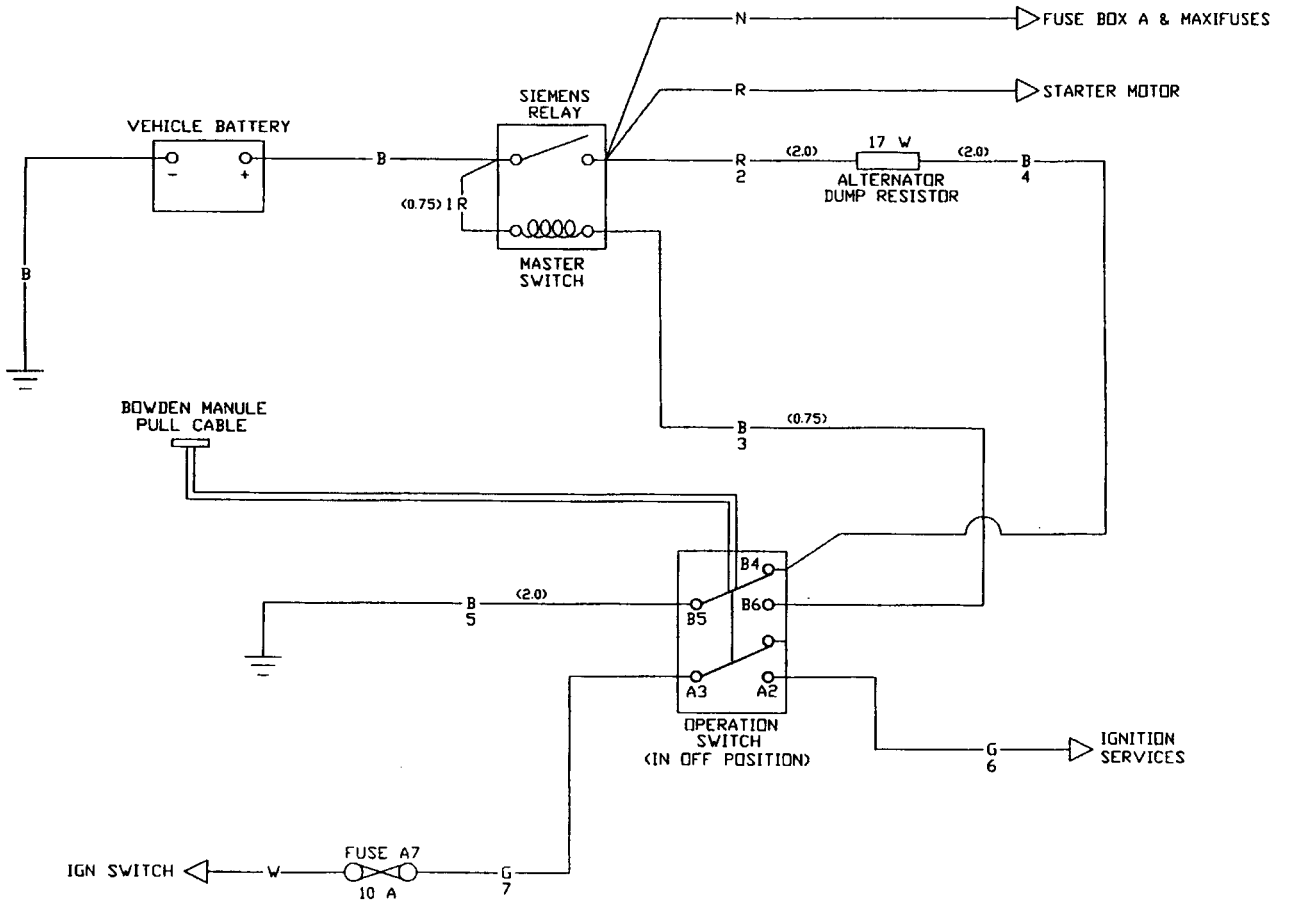

XA.13 - REMOVEABLE STEERING WHEEL - A111H0026J

The motorsport removeable steering wheel is a direct replacement for the standard wheel, and allows for quick detachment of the wheel for improved cabin access, and can provide an increased measure of theft protection. The Momo three spoke wheel is the same 320mm (12½ in) diameter as the standard wheel, and is trimmed in red leather, with contrasting leather inserts in the thumb areas. A removeable key barrel provides the option to lock the wheel to the column, and positional variations of the three wheel to hub drive pins, ensures that wheels cannot be interchanged between similarly equipped cars.

Fitting Instructions

1. Remove the standard steering wheel:
   - Pull off the centre trim pad with horn button and disconnect the two horn leads.
   - Remove the column nut and match mark the hub to the column to aid alignment on re-assembly.
   - Use a suitable steering wheel puller tool to locate behind the steering wheel boss and bear against the end of the column.

   CAUTION: If excessive force is applied to either the wheel or column without an appropriate puller, the telescoping mechanism of the outer column may be activated, necessitating column replacement.

2. Dismantle the standard wheel and retain the splined hub, and the horn slip ring carrier.

3. Assemble the new wheel assembly:
   - Fit the horn contact adaptor into the locking ring with the alignment pip and notch engaged.
   - Secure the steering wheel spacer ring to the locking ring with six countersunk screws, using a suitable thread lock.
   - Fit the steering wheel to the spacer ring with six countersunk screws, using a suitable thread lock.
   - Connect the two leads to the new horn push - red to centre, black to side, and press the button assembly into position.
   - Fit the hub spacer ring to the splined hub using four caphead screws and suitable threadlock, with the eyelet of the new horn extension lead beneath one of the screw heads.
   - Fit the horn slip ring carrier to the splined hub, feeding the two wires through the hub and spacer ring. Ensure that when the splined hub is fitted to the column, the turn indicator cancelling vane is on the left hand side.
   - Check that the column bearing preload spring is fitted onto the column before fitting the splined hub with the match marks aligned. Fit the column nut and tighten to 25 Nm.
   - Connect the horn lead spade connectors to the spigot hub and insulate with the sleeves provided. Fit the spigot hub to the hub spacer ring with the notch on the hub periphery aligned with the 'TOP' mark on the reverse side of the splined hub and secure with the six countersunk screws, using a suitable thread lock.

4. Fit the steering wheel onto the spigot hub and check the operation of the key barrel lock, horn button, and indicator cancelling mechanism.

Illustration overleaf .....

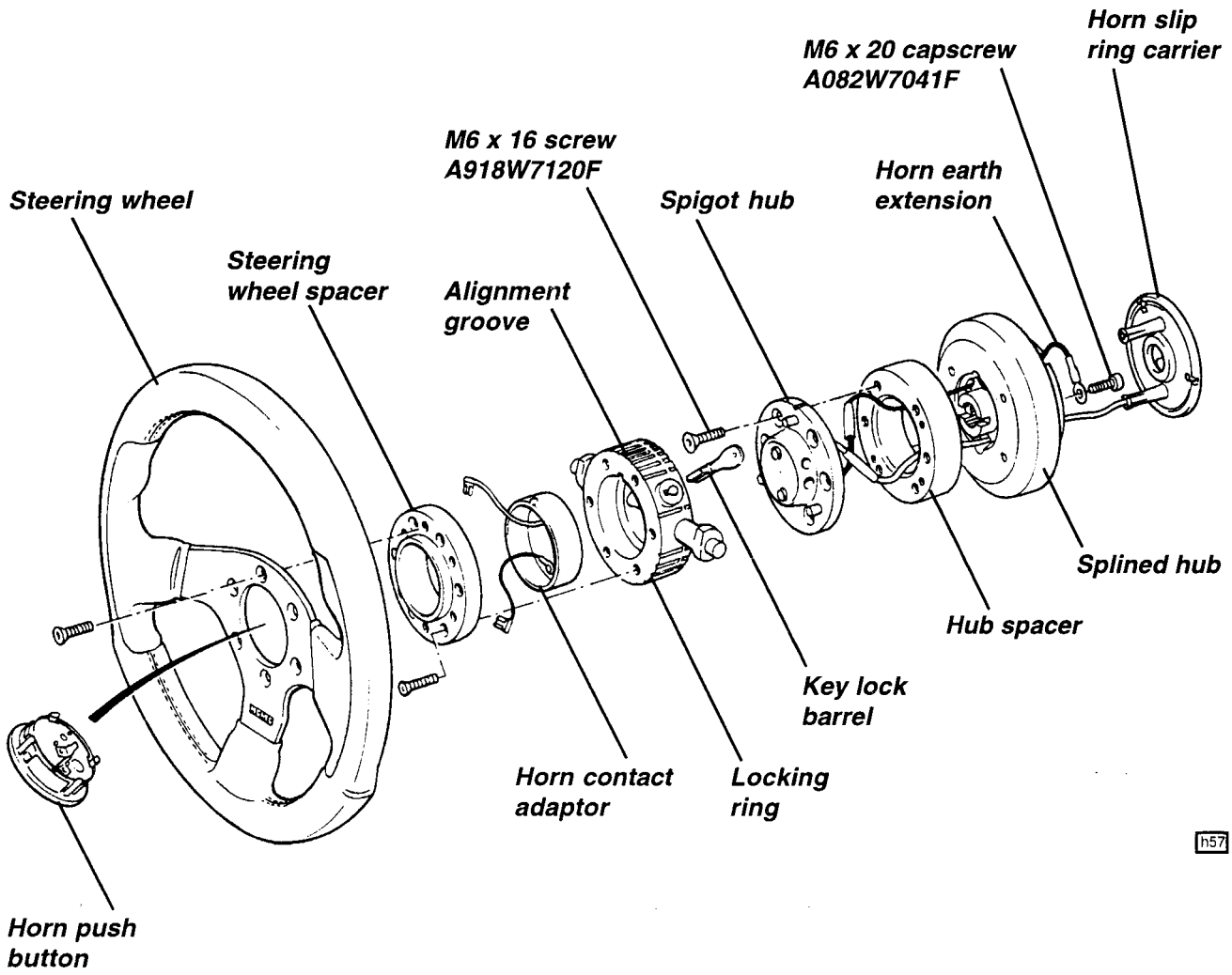
Horn slip ring carrier
M6 x 20 capscrew A082W7041F
M6 x 16 screw A918W7120F
Horn earth extension
Steering wheel
Spigot hub
Steering wheel spacer
Alignment groove
Splined hub
Hub spacer
Key lock barrel
Horn contact adaptor
Locking ring
h57
Horn push button

XA.14 - STAGE 2 (135 BHP) ENGINE TUNE UP KIT - A/B111E6215S

This kit comprises a reworked cylinder head assembly and cast alloy intake manifold and plenum. It is designed to be used in conjunction with the competition silencer (A111S0037S), and for track use, with the catalyst replacement pipe (A111S0048S). Cars fitted with an aluminium boot bulkhead will also require this item changing for a reprofiled version supplied in the kit. A modified engine cover lid in composite material is available to clear the new intake plenum, but it is possible to trim/modify the existing aluminium lid to fit.

A running change made to the cam belt tensioner mechanism on the Rover K16 engine requires that cylinder heads with different belt tensioner machining details are used. On engines with serial numbers prior to 153993, kit A111E6215S should be used, with later engines using B111E6215S.

Contents of Stage 2 Kit	*Qty*
Cylinder Head Assembly comprising:	1
Cylinder head	1
Cam cover	1
Cam cover bolts	15
Tappets	16
Valve spring cap	16
Valve stem seal	16
Valve spring	16
Modified inlet valve	8
Modified exhaust valve	8
Valve collets	32
Inlet camshaft	1
Exhaust camshaft	1
Camshaft oil seal	4
Cam cover gasket	1
Cylinder head gasket	1
Blanking plate/vac. spigot	1
Inlet manifold stud	2
Exhaust manifold stud	5
Inlet manifold gasket	1
Exhaust manifold gasket	1
Upper/lower manifold gasket	1
Screw	5
Manifold support strut	1
Screw	1
Screw	1
Spark plug	4
Spark plug cover (green)	1
Modified inlet manifold upper	1
Inlet manifold lower	1
Screw, upper to lower manifold	5
Adaptor, AIT sensor	1
Water outlet elbow gasket	1
Fuel return pipe	1
Boot bulkhead	1

1. Check parts supplied against above list.

2. Refer to Elise Service Notes manual section EE, and remove the cylinder head. If the car is fitted with an aluminium boot bulkhead, remove the bulkhead.

3. Remove from the old cylinder head the plastic inlet manifold assembly.

4. From the plastic inlet manifold assembly, remove the following components for re-use:

- Air inlet temperature sensor;
- Fuel rail and injectors;
- Idle air control stepper motor;
- Throttle body and breather pipes.

5. Remove from the old cylinder head the following components for re-use:
   - Cam belt tensioner spring pedastal bolt;
   - Rotor arm and anti-flash shield;
   - Distributor cap and HT leads;
   - Water outlet elbow.

6. Assemble the new inlet manifold:
   - Fit the new upper inlet manifold (plenum) to the new lower manifold with gasket and screws;
   - Fit the throttle body assembly to the new plenum;
   - Fit the air inlet temperature sensor with its new adaptor into no.4 branch of the new lower manifold;
   - Fit the new blanking/vac. spigot plate with gasket to the end of the new intake plenum;
   - Fit the fuel rail assembly and injectors into the new lower inlet manifold;
   - Fit the new fuel return pipe to the fuel rail;

7. Assemble the new cylinder head;
   - Fit the cam belt top cover;
   - Fit the camshaft pulleys;
   - Fit the two new inlet manifold studs into the top two fixing holes in the head;
   - Fit the five new exhaust manifold studs;
   - Fit the distributor cap and leads;
   - Fit the timing pedastal bolt;
   - Fit the water outlet elbow and gasket;
   - Fit the new inlet manifold assembly.

8. Fit the new cylinder head assembly as detailed in service notes section EE, paying attention to the crankshaft and cam positioning to avoid piston/valve foul.

9. Fit the new manifold support strut to the manifold and cylinder block using the new bolts supplied.

10. Connect the fuel pressure regulator valve sensing hose and MAP hose to the right hand end of the intake plenum via the two spigots, or single spigot and 'T'-piece.

11. Fit the exhaust manifold.

12. With camshaft cover removed, pour oil over the camshafts and valve gear to ensure adequate lubrication on start up.

13. Fit cam cover and new spark plug cover.

14. If applicable, fit the new aluminium boot bulkhead.

15. Fettle and/or modify the engine cover lid as necessary to provide sufficient clearance to new intake plenum.

16. Fill the engine with a good quality mineral (not synthetic) oil meeting the viscosity requirements of the standard engine, (see Owner's Handbook or Service Notes Section OG), and change the oil and filter after the running in period of 1,000 miles. Part or fully synthetic oil may be used to advantage after running-in, with the same viscosity requirement.
    Note that for the hydraulic tappets to prime, the engine may require cranking for an extended period.

17. For normal road use, the standard maintenance schedule may be used, with oil and filter changes at 9,000 mile intervals. For cars used on circuit 'track days', it is recommended to reduce the change interval to 3,000 miles, and for full race use, change every two meetings.

XA.15 - YOKOHAMA A038-R COMPETITION TYRES

The Yokohama A038-R tyre has been jointly developed by Lotus and Yokohama specifically for the Lotus Elise, and whilst the specification is optimised for track use, the tyre is road legal in the U.K. and Europe. The tyre offers a high level of grip in both dry and wet track conditions combined with good braking performance. The water clearing ability of the tyre is limited in standing water, such that appropriate allowances should be made in these conditions. For competition use, the eligibility of the tyre should first be checked with the appropriate organising authority. Note that the tyre tread pattern is directional, with the correct rotation marked by an arrow on the sidewall.

The potential chassis loadings provided by this tyre require that it be used only in conjunction with the sport road spring and damper set, lowered ride height, specific suspension geometry (with increased negative camber), uprated front anti-roll bar and Uniball rear toe link kit. The tyres should be mounted on factory approved Elise 'race' wheels (6J front, 8J rear) in order to provide good tread stability for ultimate performance.

Tyres

Tyre designation		Yokohama A038-R
Size	- front	195/50 R15 82V (K-5243)
	- rear	225/45 R16 89W (K-5244)
Pressure (cold)	- front	1.6 bar (23 lb/in²)
	- rear	1.7 bar (25 lb/in²)

Suspension Geometry

Refer to sub-section XA.8 to set the chassis to the lowered ride height of 100/110mm front/rear, and to set the steering rack height and rear bump steer shimming. The following suspension geometry setting is recommended for dry circuit use:

Item	*Specification*	*Tolerance*	*Max. difference side/side*
Front Camber:	- 1.8°	+ 0.1°, - 0.2°	0.2°
Front Caster:	+ 3.8°	± 0.2°	0.2°
Front Toe:	0.5mm toe out overall	+ 0.2mm, - 0	
Rear Camber*:	- 2.7°	+ 0.2°, - 0.2°	0.2°
Rear Toe:	2.5mm toe in each side	+ 0.2mm, - 0	

* It may be necessary to machine the top ball joint plinth in order to attain sufficient negative camber.

XA.16 - 340R 340 PS/TONNE PACK (RHD: A340X6007S, LHD: A340X6014S)

LSL389

The purpose of the 340 ps/tonne kit is to optimise the performance potential for use on closed race tracks. A major part of the package involves the removal of components to save weight, with the full procedure below resulting in a dry weight of 571 kg. With a power output of 195 ps, a power/weight ratio of 340 ps/tonne is achieved. The RHD kit includes an oil cooler fitting kit, which is factory fitted on LHD cars.

Kit Contents

Engine:
- 190 bhp ECM (surcharge on old unit)
- 101° Inlet cam pulley
- Breather hose kit
- 82°C thermostat
- Track exhaust muffler (stainless steel)
- RHD kits only: Oil cooler kit
- Grommets for airbox, backplate and oil catch tank
- Blanks for inlet manifold IAC ports

Clutch:
- Uprated (higher clamp) clutch cover
- Uprated (material) friction plate
- Standard release bearing

Chassis:
- Road spring set
- Pagid Motorsport brake pad set
- Castrol racing brake fluid
- Goodridge braided brake hose

Body:
- Rear diffuser panel and brackets
- Carbon fibre headlamp blanks
- Polycarbonate windscreen

Electrical:
- Lightweight race battery
- Rear racelight conversion kit
- Immobiliser bridging link
- Sidelight switch connector bridging link
- Hazard switch aperture grommet
- Column switch aperture blanks
- Alloy cover for bulkhead electrics box

Miscellaneous:
- Carbon fibre seat
- Removable 305mm steering wheel kit
- Elise gear lever surround
- Driver only roll over bar (RHD or LHD)
- 5 point driver's harness kit
- Alloy fuel tank
- Camber shim plates

Engine Upgrade

Delete air intake resonator valve: Remove the air intake resonator valve and control mechanism including the vacuum reservoir and two solenoid valves. Re-plumb the MAP sensor. Discard the secondary air cleaner at the airbox inlet, and connect the intake trunking directly to the airbox, with the primary air cleaner at the front end of the trunking, which can be sited close to, or connected to the air intake duct on the LH flank. Take care when washing, to avoid directing jet wash equipment into the intake duct - blank off if necessary.

Delete breather rail: Remove the steel breather rail from the inlet tracts. Remove breather hose from cam cover to rail. Fit alloy blanking plugs to inlet tract spigots.

Delete charcoal canister: Remove the charcoal canister and plumbing. Vent the fuel tank breather pipe from the roll-over valve to atmosphere.

Delete IAC valve: Remove the idle air control valve, mounting bracket and plumbing. Fit blanking plugs to the inlet tract spigots on manifold underside. Fit blanking grommet to backplate.
Fit breather hose kit: Remove the screenwash bottle and battery clamp bracket from the front chassis well. Cut the top, bottle mounting portion, of the bracket from the lower, battery clamp, section, and paint protect the cut surface. Rivet the bottle mounting bracket to the LH side of the engine bulkhead, and fit the washer bottle with motor aperture blanking grommet, to the bracket to act as oil catch tank. Remove the breather hose between cam cover and airbox, and fit the grommet to the airbox hole. Use the breather hose kit to connect the two cam cover breather spigots to the catch tank, cutting a 13 mm hole in the top surface of the bottle to admit the breather hose, and a similar hole in the bottle filler cap to allow breathing.
Fit race exhaust system: Remove the catalytic converter and standard muffler, and replace with the track muffler.
Fit lower temp. thermostat: Replace the standard 88°C thermostat with the 82°C thermostat.
Exchange ECM: Replace the standard ECM with the reprogrammed unit, and return old unit to Lotus.
RHD only: *Fit oil cooler kit:* See separate instruction sheet LSL388.

101° MOP Inlet Cam Pulley:
The standard engine inlet cam timing is 105° ATDC maximum opening point. The modified pulley supplied in the kit allows the inlet cam timing to be advanced by 4° to 101° MOP.

1. Remove the timing belt top cover.

2. Turn the engine to align the timing mark on the crankshaft front pulley with the 'safe' position 45° ATDC mark (12 O'clock) on the timing belt lower cover. Check that the camshaft pulley timing marks are aligned towards each other; if not, turn a further 360°.

3. Slacken the belt tensioner clamp bolt, and remove tension from the cam belt.

4. Use special tool T000T1280 to hold the inlet camshaft pulley and release the retaining bolt. Withdraw the pulley from the camshaft and timing belt.

5. Fit the new pulley to the camshaft with the 'T' mark just above the timing mark on the exhaust camshaft pulley and the dowel engaged in the pulley slot. Use special tool T000T1280 to hold the inlet camshaft pulley and tighten the M10 retaining bolt to 65 Nm

6. Turn the inlet camshaft to align the inlet pulley 'T' mark with the exhaust pulley 'EXHAUST' mark, and slip the belt onto the pulleys ensuring that the drive side of the belt is tight and the crankshaft pulley is still positioned at the 90° ATDC mark.

7. Using a 6mm hex. key, rotate the tensioner counterclockwise and align the centre of the indent on the tensioner pointer with the index wire ensuring that the pointer approaches the index wire from above. If the pointer passes the wire, release the tension completely and repeat the procedure.

8. Ensuring that the pointer does not move, tighten the tensioner bolt to 25 Nm.

9. Using the crankshaft pulley bolt, slowly turn the crankshaft 2 turns clockwise to check there is no valve/ piston contact, and re-align the timing marks without having to 'back up'. Check that the tensioner pointer is still correctly aligned with the index wire. If not, slacken the tensioner bolt until it is just possible to move the lever clockwise, and position the pointer just above the index wire. Continue with operation (7).

10. Refit the belt guards.

Clutch Kit
The clutch kit is a direct replacement for the standard components. See Service Notes section QF.

Body Pack
Rear diffuser panel: Remove the rear diffuser panel, and replace with the new (standard Elise) panel using new mounting struts which attach to pre-drilled holes in the subframe top rear flange.
Carbon fibre headlamp blanking panels: Remove the headlamp and turn indicator lamps, and cut the lamp

housings from the topshell with a windscreen removal pneumatic knife. Fit the headlamp blanking panels to the topshell using elastomeric adhesive.
Polycarbonate windscreen: Remove the windscreen, and replace with the lightweight polycarbonate version. Refer to Service Notes sub-section BN.13.
Remove:
- Complete wiper mechanism, including washer components.
- Rear shroud panel (mid spoiler) complete with rear fog lamp, reverse lamp, harnesses, grilles and brackets.
- All four mudguards and mounting brackets. Fit camber shim plates supplied to compensate for mounting bracket thickness.
- Engine bay rear wall.
- Driving lamps and mounting brackets.
- Horn.
- Front licence plate mounting and brackets.
- Front air intake grille and towing eye.
- Tyreweld canister and mounting clip.
- Rear window.
- Exterior mirrors and alloy spacers/plinths. Fit blanking grommets in topshell holes.
- Side repeater lamp plinths. Bond repeater lamps to body with elastomeric adhesive.
- Right hand side engine bay air intake duct.

Electrical & Interior
Battery: Replace the standard battery with the lightweight race battery and mounting bracket.
Race light conversion: Change the two outermost bulbs in the CHMSL to 3W to become the racelight, activated with the ignition. The centre two bulbs remain as stop lamps. Fit the link lead supplied in the kit, as directed by the specific instructions supplied (LSL390).
Remove:
- Alarm controller, siren and bracket, microwave sensor, immobiliser and alarm harness. Plug bridging link into immobiliser connector.
- Footwell divider alloy panel.
- Cockpit divide switches, mounting panel and strut. Plug bridging link into sidelamp switch connector.
- Gear lever/handbrake shroud, with trickle charger socket. Fit standard Elise gear lever shroud.
- Auxiliary power sockets, mounting panel and harness.
- Hazard switch and fit grommet.
- Column switches and fit alloy blanks using elastomeric adhesive.
- Rear indicator and tail lamp assemblies, inc. mounting brackets and harnesses.
- Licence plate lamps and harness.
- Engine cover lid alarm switch and harness.
- Top shell harness.
- Relays; main, aux., dip, horn, heated screen; and relay cover.
- Fuses; 2,4,5,6,9,10,14,16,17,18,20,21,22 and fuse cover.
- Passenger footrest.
- Luggage net.
- Floor mats.
- Interior mirror.
- Fix the alloy blanking panel to the aperture in the rear bulkhead electronics cover using double sided tape or rivets.

Miscellaneous
Seats; Remove the passenger seat and mounting frame. Remove the driver's seat but retain the runners.
Driver's 5th point seat harness kit: Remove the latch from the seat harness lap strap by inserting a stiff wire into the latch hole. By similar technique, fit the new rotary release latch to the lap strap. Fit the grommet onto the new crutch strap, and thread the anchor bar through the crutch strap loop. Feed the strap through the seat frame cross brace aperture and the slot in the new carbon fibre driver's seat, and fit the grommet into the frame aperture. Fit the new seat to the runners with the crutch strap anchor bar secured beneath the cross brace by the seat front fixings.
Roll over bar; Remove the double hoop roll-over bar, and replace with the driver only, RAC approved, (RHD or

LHD) bar. This will require a clearance slot to be made in the engine lid and body aperture gutter. A template (LSL401) for the engine lid slot is provided with the bar to allow an initial fit to be made, with initial dimensions for the body aperture measureable from this. The spoiler mounting plate will also require a small clearance groove to be made to allow the backstay to be connected. The body on each car will require individual fettling, but with care, no painting should be required. Note that with this bar fitted, a passenger seat **MUST NOT** be fitted.

Removable steering wheel; Fit the removable steering wheel kit as detailed in sub-section XA.14.

Delete handbrake: Remove handbrake lever, mounting bracket and cables. Remove the lever and spring from each rear brake caliper.

Alloy fuel tank; Remove the steel fuel tank and replace with race alloy tank using original pump and fittings (refer to section LH). Bend the float arm of the gauge sender to clear the side panel of the new tank.

Heater duct: Remove the heater offtake duct from the radiator, the heater trunking, and the duct onto the footwell vents.

Chassis Pack

The uprated brake pads, racing brake fluid and braided brake hoses are all direct replacements for the standard components, but note that the rear hoses do not use the 'P' clip on the lower wishbone, but are tie strapped in two positions to the toe-link.

Road springs: If the full lightening programme has been carried out, the new road springs should be fitted in order to maintain spring compression at full droop. Spring rate is the same as standard 340R. With the car loaded with driver (or 75kg) and a half tank of fuel (plus all fluids), adjust the spring platforms to set the ride height to 100 mm front, and 110 mm rear. At **only** this ride height, set the suspension geometry to that specified in service notes 340R.C and 340R.D for either road use, or dry track use dependent on customer preference.

Recommended Fitting Time

LHD; 24.0 hrs

RHD (inc. oil cooler fitment); 27.0 hrs.

XA.17 - 340R OIL COOLER KIT (A340E0035S)

LSL388

All LHD 340Rs were factory built with oil coolers. The following procedure outlines oil cooler fitment to a RHD 340R, recommended for use on race tracks or in conjunction with the 340ps/tonne kit.

Kit Contents:

Oil Cooler	A340E6025F	1
Oil Filter Housing	A111E6146F	1
Gasket, oil filter housing	A111E6101F	1
Oil Filter	A111E6038S	1
90° Connector, oil pressure switch	A111E6147F	1
Oil Pressure Switch	A111E6099S	1
Hose, oil cooler feed	A340E0036F	1
Hose, oil cooler return	A340E6020F	1
Grommet, cooler hose	B111G6012F	4
Pillar Nut, M6, oil cooler mounting	A340E0034F	4
Setscrew, M6x12, oil cooler fix	A000Z7043F	8
Washer, flat, M6	A075W4013F	8
'P' Clip, open, cooler hose fix	A075W6229F	8
Pop Rivet, 'P' clip	A075W6087F	8

Fitting Procedure

1. Remove the body topshell (see sub-section 340R.B)

2. Replace the oil filter housing on the engine with the new housing which incorporates feed and return ports for the oil cooler hoses. Fit the new oil filter. Using a thread sealant, screw the new adaptor elbow into the tapped hole on the underside of the housing, and fit the new brown bodied oil pressure switch into the elbow (note that the new switch is taper thread, old switch parallel thread).

3. Cut a pair of 32mm diameter holes for the cooler hoses in the right hand outer wall of the radiator duct, just ahead of the engine coolant hose aperture, and another corresponding pair of holes in the rad. duct inner wall.

4. Position the oil cooler in the intake air duct, approx. 50 mm behind the towing strut. Mark up the fixing holes in the floor of the duct, and drill M6 clearance holes. Mount the cooler using the M6 fixing screws and washers, with the pillar nuts between the duct floor and cooler.

5. Connect the cooler hoses to the oil filter housing, with the 45° return hose union fitted to the housing right hand port, and the swept 90° union on the feed hose connected to the left hand port. Take care to route the feed hose, with its heat protective sleeving, away from the exhaust downpipe, and secure to the water rail at the front of the engine bay. Route both hoses against the bulkhead, outboard of the fuel filler hose, and through the engine bay RH air intake aperture (on some early cars, it may be necessary to cut an aperture in the side closing panel). Ensure that both hoses are fitted with convolute protective sleeving in vulnerable areas, especially through the air intake aperture.

6. Route the hoses against the upper part of the cockpit closing panel, beneath the coaming, and secure with 'P' clips, positioning the clips to allow access to the topshell fixing studs. Continue routing against the windscreen buttress and RH top rear corner of the radiator duct, clipping as required. Take care not to inhibit topshell fitment or headlamp access. Feed the hoses through the air duct holes, and fit the grommets. Connect to the oil cooler, using two spanners to prevent the cooler unions being twisted.

7. Disable the ignition low tension and crank the engine to fill the oil cooler and hoses before starting the engine. Top up oil level if required. Run engine and check for leaks before refitting the topshell.

Recommended Fitting Time

6 hrs (including topshell remove/refit)

Oil Cooler Hose Routing

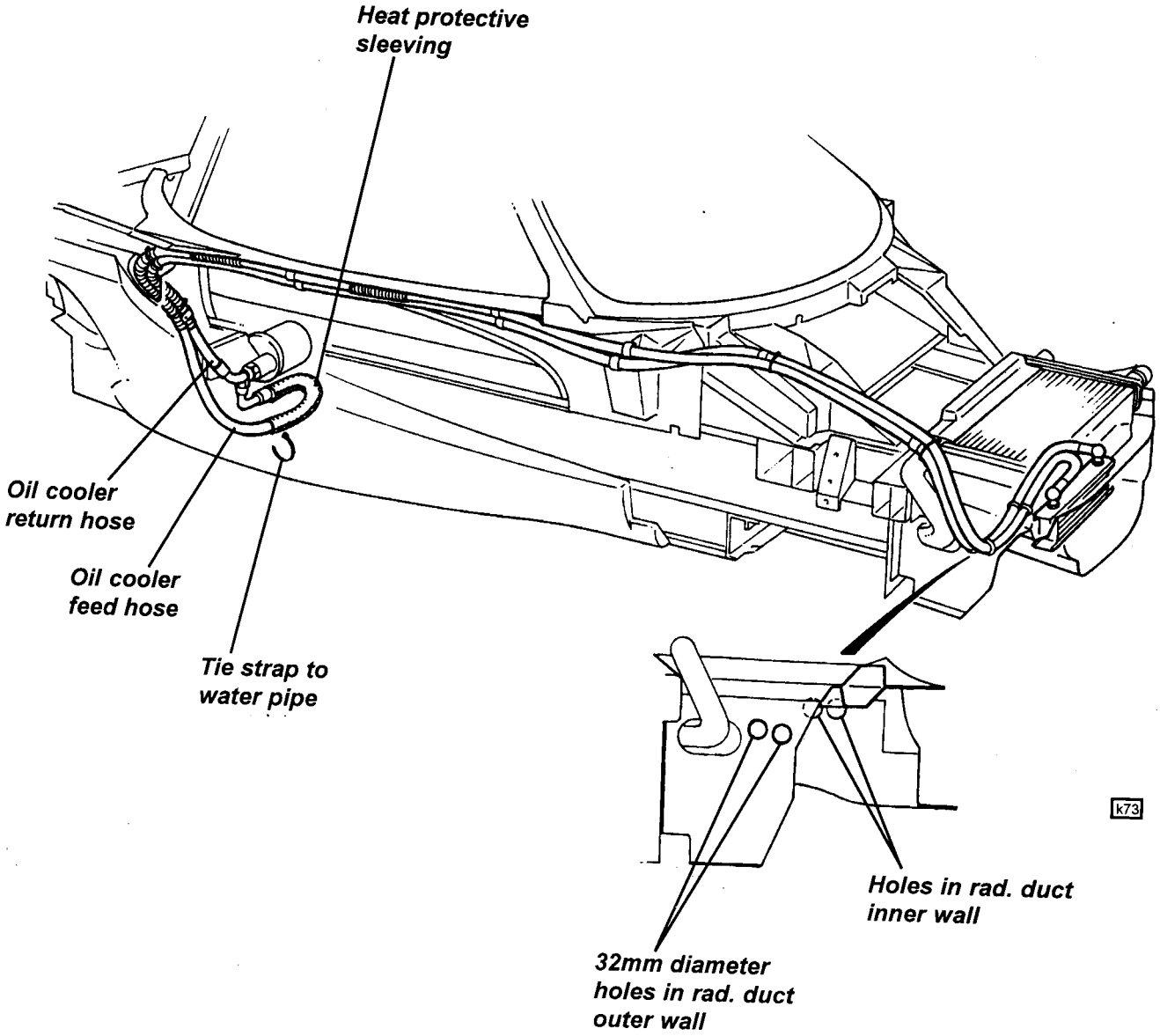

XA.18 - GOODRIDGE BRAKE HOSE SET (A340J6000S)

LSL398

The Goodridge steel braided brake hose set is a direct replacement for the standard hoses, with the following exception:

- The rear hoses do not use the standard 'P' clip on the lower wishbone, but should be tie strapped in two places to the rear toe-link.

XA.19 - 5TH-POINT SEAT HARNESS KIT (A340U6005S)

LSL393

Remove the latch from the seat harness lap strap by inserting a stiff wire into the latch hole. By similar technique, fit the new rotary release latch to the lap strap. Fit the grommet onto the new crutch strap, and thread the anchor bar through the crutch strap loop. Feed the strap through the seat frame cross brace aperture and the slot in the driver's seat, and fit the grommet into the frame aperture. Secure the crutch strap anchor bar beneath the seat frame cross brace by the seat front fixing studs.

XA.20 - REAR RACELIGHT CONVERSION KIT (A340M0042K)

LSL390

The racelight conversion kit provides for the Centre High Mounted Stop Lamp (CHMSL) to be used for both a brake lamp, and also a racelight activated with ignition.

1. Disconnect and remove the CHMSL from the topshell and cut the lower (+ve feed) copper track in two places as shown, to separate the function of the two outermost bulbs from the inner pair.
2. Replace the two outermost bulbs with 3W items.
3. Solder the ends of the two green cables on the new harness to the outer bulb +ve tracks.
4. Refit CHMSL to topshell, connect conversion harness to lamp, and secure to topshell and plug in to main harness 4-way connector.
5. Fit bridging link into main harness sidelamp switch connector.

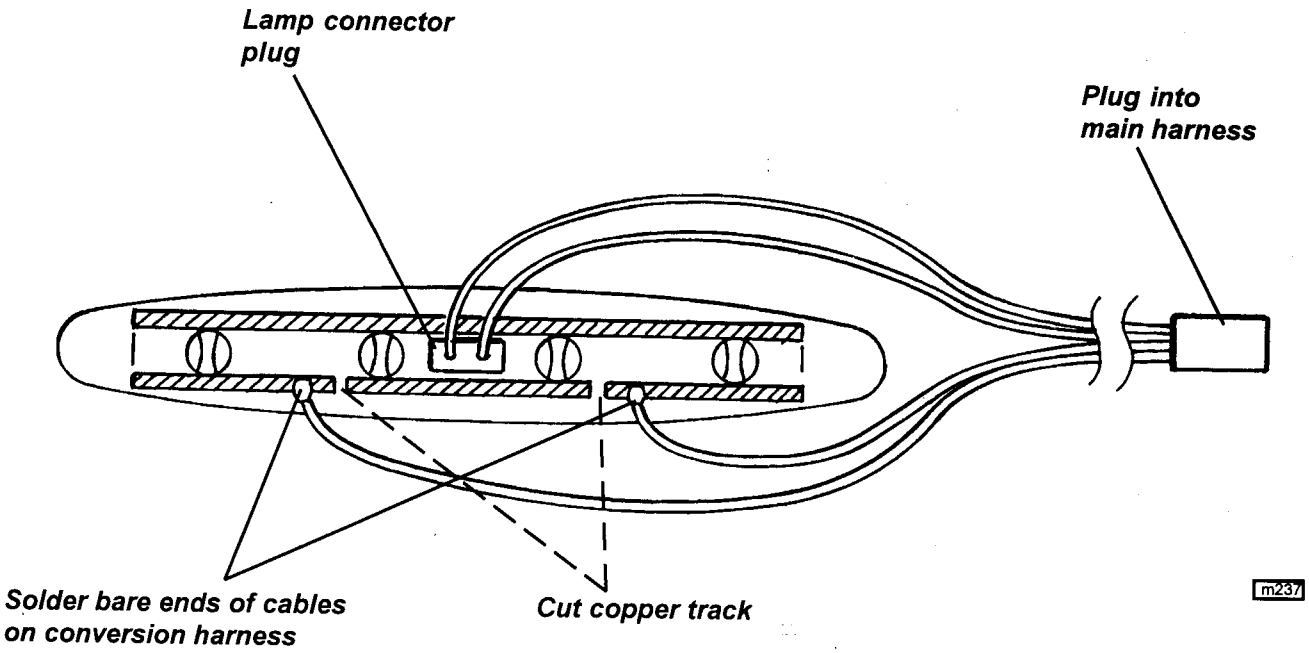

XA.21 - TONNEAU COVER (RHD - A340V6000S; LHD - A340V6022S)

This tonneau cover is manufactured from an Acrylic material with a polyurethane coating on the inside, and not from Haartz material as stated in some sales literature.

Stowage

It is important that the tonneau cover is not kept in the storage bag for long periods when wet, as this will affect both the aesthetics and the polyurethane coating.

Rear Screen

If the car is for track use, the rear screen may be removed. For road use, the screen should be retained (legal requirement) but a procedure is included to modify the screen mounting to allow for easy fitment of the tonneau cover.

Fitting Procedure

1. Remove the passenger seat, slide the driver's seat fully forwards, and remove the cover from the rear bulkhead electronics box.

2. Remove the rear screen. For race use, use grommets to blank off the screen fixing holes in the bulkhead.

3. If the screen is to be retained;
   - Bond an M5 x 12 big head stud (A082W5128F) into the two screen fixing holes in the bulkhead electronics box from the inside.
   - In the screen mounting bracket, drill a 6mm diameter hole 9mm from each of the two fixing stud positions, towards the rear edge of the bracket.
   - Cut the studs from the bracket, and grind flush. Paint the underside of the bracket black.
   - To fit the screen, locate the screen bracket onto the two studs, and secure with the plastic wing nuts (A111W3146F).

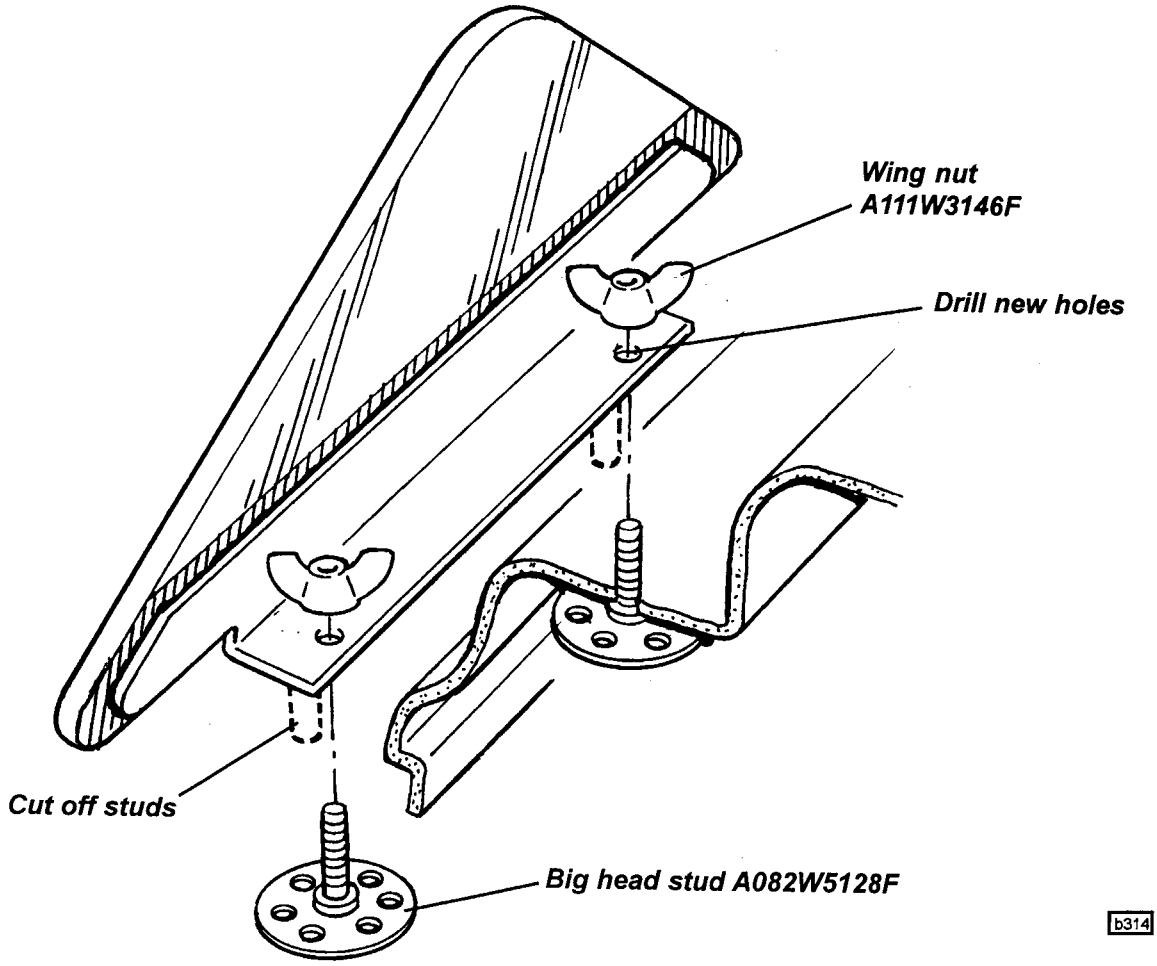

4. Push the tonneau half round dash section into place below the windscreen and above dash. Hold in place whilst marking each 'A' post for the socket position. Remove tonneau, and drill a suitable hole in each screen pillar for the self tapping press stud socket. Fit the two sockets.

5. Fit the tonneau to the screen pillars, and pull tight into the roll hoop centre gap. Mark topshell deck with positions of the two sockets, and drill and rivet into place with black rivets.

6. Pull the cover around the rest of the cockpit, and mark the postions of the remaining sockets as shown in the diagram. Take care when drilling the topshell to limit penetration so as not to damage any parts below (e.g. harnesses or hoses). Rivet the sockets to the body, and fit the tonneau, routing the drain tubes at the front beneath the instrument rail and into the passenger footwell, where excess water can drain away. By unzipping the driver's side of the tonneau, and stowing the rolled section behind the driver's seat, the car can be driven with some interior protection. Note that the rear screen should be in place when driving in this configuration.

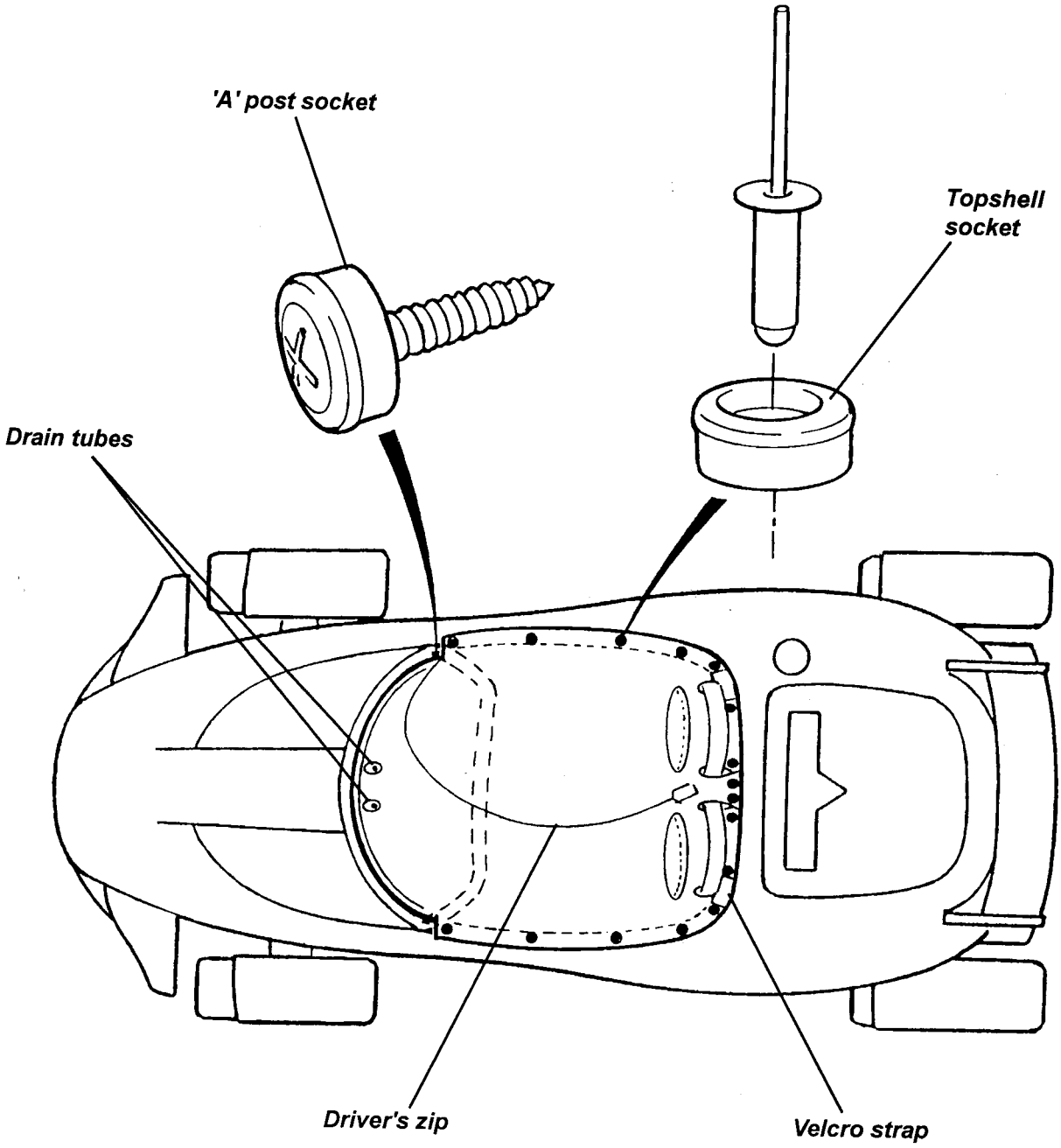

b315

XA.22 - 340R EXCHANGE 190 BHP ECM (A340M6026S)

LSL394

The 190 BHP exchange engine ECM is designed for track use only, and includes the following features:

- Modified fuelling and ignition maps;
- Open loop fuelling;
- Rpm limit raised from 7,800 to 8000 rpm;
- Rad. fan switching point lowered from 104°C to 92°C.

The ECM is calibrated to optimise performance with the following performance parts fitted as a package:

-	Deletion of intake resonator valve.
A340E0011S	101° inlet camshaft pulley;
LOTAC05066S	Stainless steel catalytic converter replacement pipe;
A340X6013S	Breather kit (inc. breather rail blanking plugs & idle stub blanks);
A340E6011S	1 litre breather catch tank;
A340K6007S	82°C thermostat;
A340E0035S	Oil cooler kit (RHD);

Exchange ECM (0.8 hr)

Replace the standard ECM with the 190 BHP version, and return the old unit to Lotus. A surcharge will apply until the old unit is received.

Delete Intake Resonator Valve (0.6 hr)

Remove the air intake resonator valve and control mechanism including the vacuum reservoir and two solenoid valves. Re-plumb the MAP sensor. Discard the secondary air cleaner at the airbox inlet, and connect the intake trunking directly to the airbox, with the primary air cleaner at the front end of the trunking, which can be sited close to, or connected to the air intake duct on the LH flank. Take care when washing, to avoid directing jet wash equipment into the intake duct - blank off if necessary.

101° Inlet Camshaft Pulley (2.5 hrs):

The standard engine inlet cam timing is 105° ATDC maximum opening point. The modified pulley allows the inlet cam timing to be advanced by 4° to 101° MOP.

1. Remove the timing belt top cover.

2. Turn the engine to align the timing mark on the crankshaft front pulley with the 'safe' position 45° ATDC mark (12 O'clock) on the timing belt lower cover. Check that the camshaft pulley timing marks are aligned towards each other; if not, turn a further 360°.

3. Slacken the belt tensioner clamp bolt, and remove tension from the cam belt.

4. Use special tool T000T1280 to hold the inlet camshaft pulley and release the retaining bolt. Withdraw the pulley from the camshaft and timing belt.

5. Fit the new pulley to the camshaft with the 'T' mark just above the timing mark on the exhaust camshaft pulley and the dowel engaged in the pulley slot. Use special tool T000T1280 to hold the inlet camshaft pulley and tighten the M10 retaining bolt to 65 Nm

6. Turn the inlet camshaft to align the inlet pulley 'T' mark with the exhaust pulley 'EXHAUST' mark, and slip the belt onto the pulleys ensuring that the drive side of the belt is tight and the crankshaft pulley is still positioned at the 90° ATDC mark.

7. Using a 6mm hex. key, rotate the tensioner counterclockwise and align the centre of the indent on the tensioner pointer with the index wire ensuring that the pointer approaches the index wire from above. If the pointer passes the wire, release the tension completely and repeat the procedure.

8. Ensuring that the pointer does not move, tighten the tensioner bolt to 25 Nm.

9. Using the crankshaft pulley bolt, slowly turn the crankshaft 2 turns clockwise to check there is no valve/ piston contact, and re-align the timing marks without having to 'back up'. Check that the tensioner pointer is still correctly aligned with the index wire. If not, slacken the tensioner bolt until it is just possible to move the lever clockwise, and position the pointer just above the index wire. Continue with operation (7).

10. Refit the belt guards.

Cat. Replacement Pipe (0.4 hr)

Remove the catalytic converter and replace with the cat. replacement pipe.

Breather Kit & Catch Tank (0.6 hr)

Fit the breather catch tank to the LH side of the engine bulkhead. Remove the breather hose between the cam cover and airbox and fit the grommet to the airbox hole. Remove the breather hose from the cam cover to breather rail. Use the breather hose kit to connect the two cam cover breather spigots to the catch tank. Leave the other breather catch tank vent pipe free (or fit a Pipercross vent filter). Remove the steel breather rail from the inlet tracts, and fit the alloy blanking plugs to the inlet tract spigots.

Delete Charcoal Canister (0.2 hr)

Remove the charcoal canister and plumbing. Vent the fuel tank breather pipe from the roll-over valve to atmosphere.

Lower Temperature Thermostat (0.7 hr)

Replace the standard 88°C thermostat with the 82°C item.

RHD Only - Oil Cooler Kit (5 hrs)

Note that all LHD cars were factory built with oil coolers. For RHD oil cooler fitting procedure, see XA.17 or LSL388.

Optional: (Not recommended for road use) Delete IAC Valve (0.4 hr)

Remove the idle air control valve, mounting bracket and plumbing. Fit the blanking plugs to the inlet tract spigots on manifold underside. Fit blanking grommet to backplate. Saves 667g.

On road based cars, for further performance enhancement between 5,000 and 6,500rpm, and with a weight saving of over 4 kg, the Titanium muffler A340M6011S may be fitted with the catalytic converter, and will meet road noise regulations as well as RAC MSA Section 'A' noise regulations.

On track based cars, for further performance enhancement between 5,000 and 6,500rpm, and with a weight saving of over 4 kg, the 'Track' exhaust muffler A340S6008S may be fitted, which incorporates a cat. replacement pipe. This part complies with RAC MSA Section 'A' noise regulations.

MOT Regulations (U.K.)

If the car is required to meet the U.K. MOT regulations, the standard engine breather system must be retained, together with the charcoal canister, and the Motorsport catalytic converter A340S6010S. Deletion of the standard breather system for track use, allows increased mid-range spark advance to be applied. If the standard breather system is retained for road use, it is recommended to use 97 RON Super Unleaded fuel in order to provide a higher resistance to detonation when using the track specification spark advance curve.

If the idle air control valve has been removed, check that the idle speed is within tolerance, as a low idle speed may cause excessive HC emissions.

XA.23 - 340R TACH TIMER LEVEL 1 (A340N0006S)

LSL392

The Tach Timer is produced by Stack specifically for the 340R, and consists of a replacement tachometer with an LCD panel to display the available features which include:

- Multi-level shift light;
- Lap times (incl. memory and split);
- Acceleration times;
- Last corner and straight line speeds

A full instruction booklet is supplied with the kit.

Fitting Instructions

1. Remove the standard tachometer and substitute the Tach Timer Level 1 instrument. Connect to existing harness plug.

2. Remove the steering column lower cowl, and cut a 7mm hole in the RH side, and a 12mm hole in the LH side to mount the driver push button and rotary switch.

3. Cut a small 4mm wide slot into the lower cowl from the top mating face on both sides, in order to allow routing of the sensor cable.

4. From the access hole in the underside of the fascia between the steering column and centre divide, withdraw the harness spur with the black 12 terminal square block connector. Plug in the new switch and lap sensor harness, and feed through the dash hole into the column shroud area.

5. Mount the push button and rotary switch to the column shroud and connect the harness. Fit the shroud and route the sensor cable out of the appropriate slot.

6. Fit harness clips A100W6353F beneath the instrument rail as shown in the diagram, with 4 under the passenger side, and 2 under the driver's side. Also fit two along the dash top towards the passenger side 'A' post. Fit one tie wrap A082M6556F harness clip, to each 'A' post vertical face.

7. Clip lap sensor cable under the instrument rail and cable tie the infra-red sensor securely to the 'A' post tie.

Your kit is now ready for use as described within this manual.

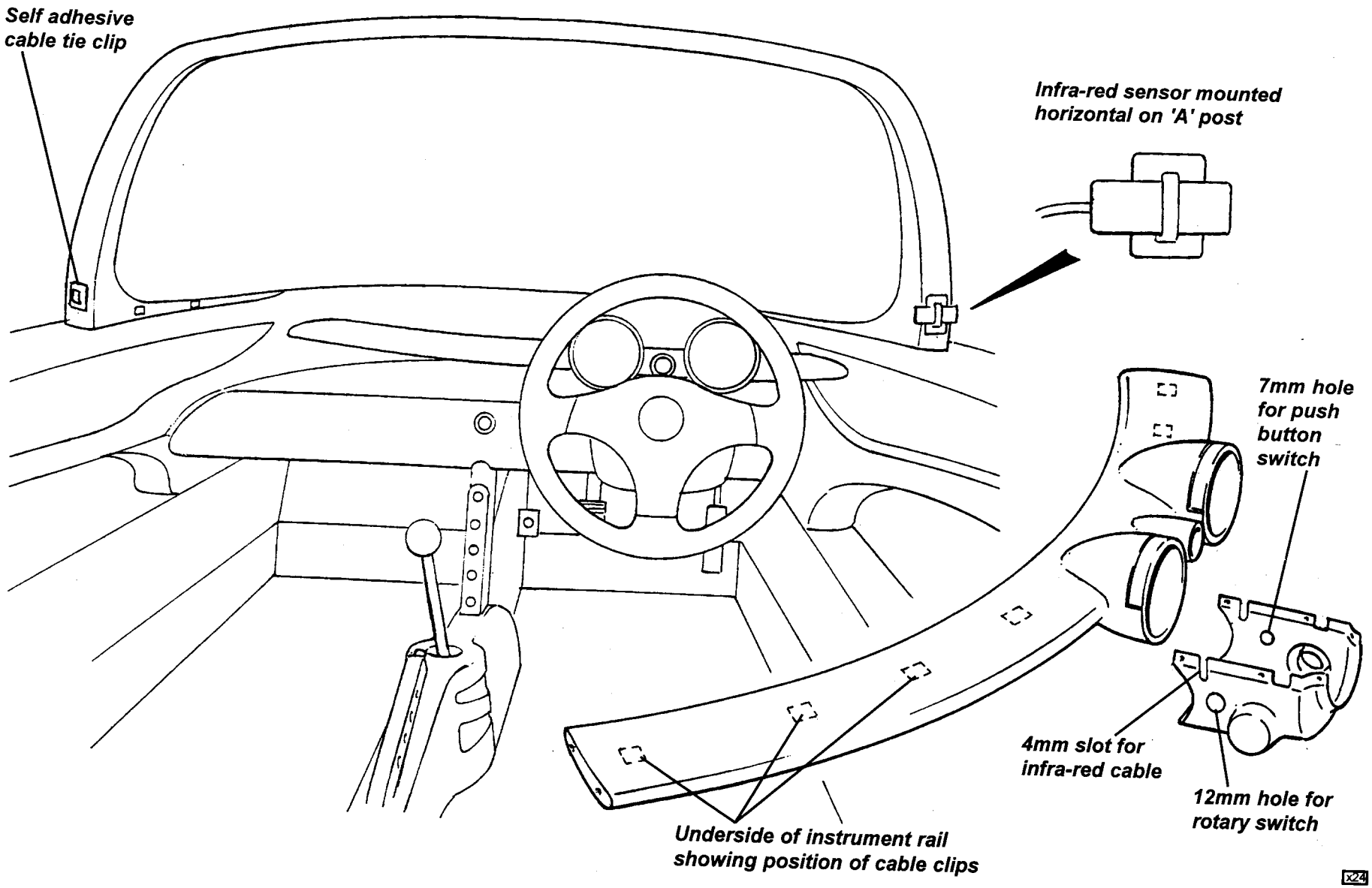
Self adhesive cable tie clip
Infra-red sensor mounted horizontal on 'A' post
7mm hole for push button switch
4mm slot for infra-red cable
12mm hole for rotary switch
Underside of instrument rail showing position of cable clips
x24

XA.24 - 340R COMPETITION ROLL OVER BAR (RHD: A340A0036S, LHD: A340A0037S)

LSL401

The driver only, competition roll over bar is available for RHD or LHD cars, and is RAC approved for competition use in the U.K. provided that a passenger seat is not fitted in the vehicle. The roll bar is a direct replacement for the standard 340R double hoop bar, and includes an anchorage bar for the standard fit competition seat belt harness shoulder straps.

Fitting Instructions

1. Remove the topshell (refer to Elise Service Notes section 340R.B) and the double hoop roll-over bar.

2. Fitment of the new bar requires a clearance slot to be cut in the engine lid and body aperture gutter. A template (LSL401) for the engine lid slot is provided below to allow an initial fit to be made, with initial dimensions for the body aperture measureable from this. The spoiler mounting plate will also require a small clearance groove to be made to allow the backstay to be connected. The body on each car will require individual fettling, but with care, no painting should be required.

3. Refit the driver's seat and seat belt harness. Note that with this bar fitted, a passenger seat MUST NOT be fitted.

Approximate dimensions of clearance slot for roll over bar backstay

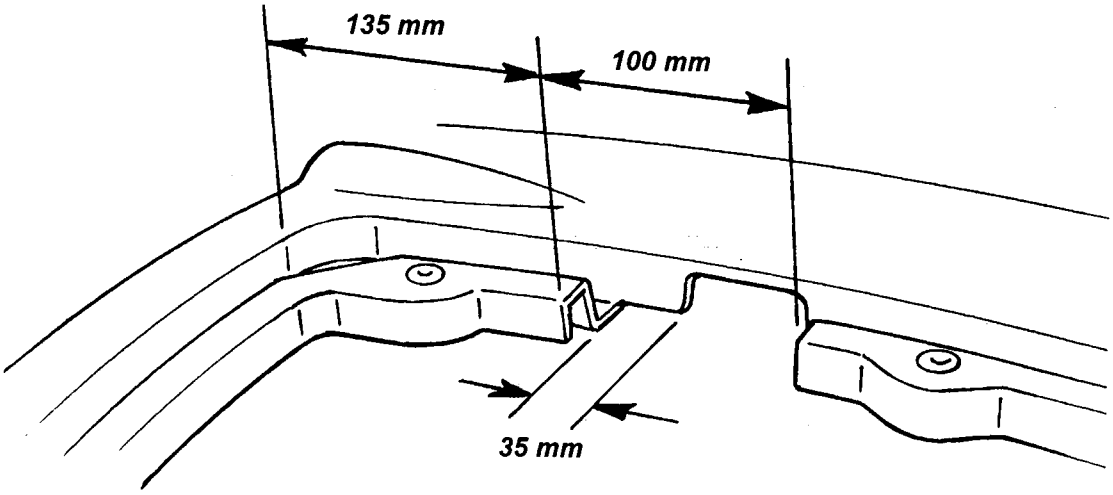

x23

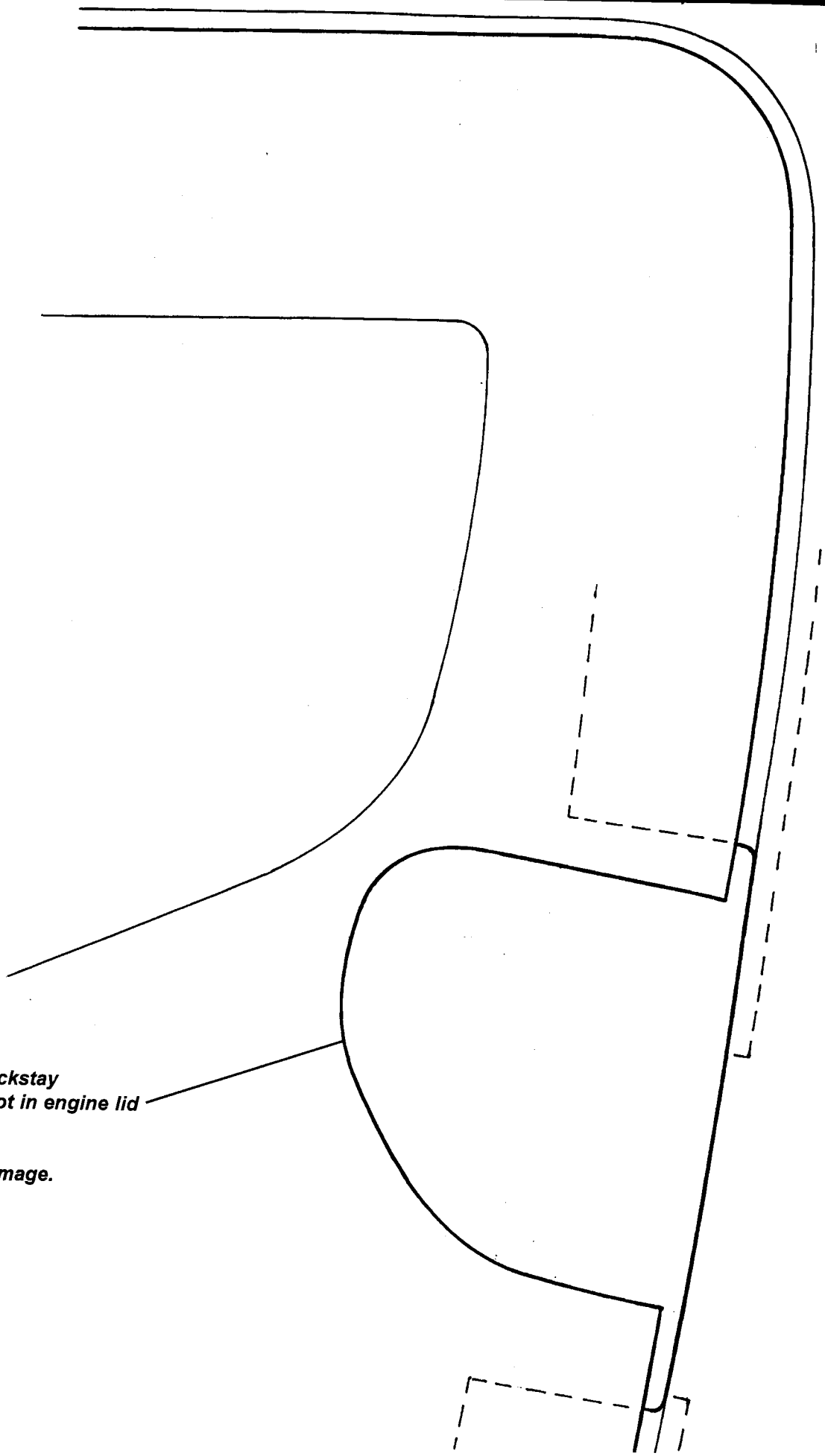

Profile of backstay clearance slot in engine lid (actual size) RHD shown; LHD mirror image.

x22

340R SUPPLEMENT

	Sub-Section	Page
Introduction	340R.#	2
Technical Data	340R.TD	2
Chassis	340R.A	3
Body	340R.B	4
Front Suspension	340R.C	8
Rear Suspension	340R.D	9
Engine	340R.E	9
Transmission	340R.F	16
Wheels & Tyres	340R.G	17
Steering	340R.H	18
Braking	340R.J	18
Cooling	340R.K	18
Fuel System	340R.L	18
Electrical	340R.M	19
Maintenance & Lubrication	340R.O	46
Heating	340R.P	50
Clutch	340R.Q	50

340R.# - INTRODUCTION

The Elise 340R made its debut at the 1998 Birmingham Motor Show as a radical lightweight sportscar concept, focused on pure driving pleasure. Minimal changes were required to meet European homologation regulations, and the car commenced production in January 2000.

The car is based on the standard Elise chassis, but uses completely different bodywork and interior, and a road going version of the Rover VHPD powertrain. The car embodies the original philosophy of the Elise, with performance achieved through light weight and efficiency, but is taken to a further extreme to focus on driving pleasure, and is aimed at the enthusiast driver and for occasional circuit use. Features include a non-structural, minimalist body without doors or roof structure, combined with separate close fitting carbon fibre mudguards, translucent body side panels, a carbon fibre rear aerofoil mounted on alloy side plates, and a special oval section steel roll over bar. Sport suspension is fitted, complete with the uprated and adjustable front anti-roll bar.

The vehicle has proven to be an extremely rare phenomenon within the motor industry, as it is virtually unknown for a concept vehicle to be productionised without drastic modification. The styling concepts first shown at the 1998 International Motor Show at the Birmingham N.E.C. have remained true to their ideals in production form. In fact, its uniqueness continues through to the rigouress acceptance criteria of the European Whole Vehicle type approval authorities, no mean feat for a vehicle with these features.

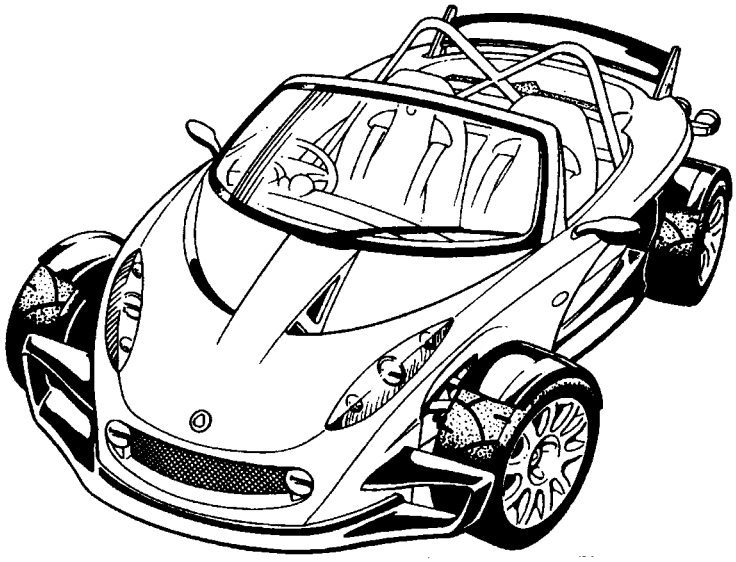

340R.TD - TECHNICAL DATA

Dimensions			
Overall length	3620 mm		
Overall width	1702 mm		
Overall height (at kerb weight)	1080 mm		
Wheelbase	2300 mm		
Track - front	1432 mm		
- rear	1459 mm		
Ground clearance (at kerb weight)	110 mm		
Approach angle	12.4°		
Departure angle	28°		
Unladen weight - total	701 kg	>	inc. full
- front	278 kg	>	fuel tank
- rear	423 kg	>	
Maximum weight - total	928 kg	}	incl.
- front	387 kg	}	occupants
- rear	541 kg	}	& luggage
Trailer towing	Not permissible		

340R.A - CHASSIS

The bonded aluminium alloy chassis structure is derived from the standard Elise chassis, but has no door hinge mountings, and the sill top edge support flanges are replaced by channel strips to mount the cockpit side screens. The galvanised steel rear subframe is fitted with additional weldnuts, and has been commonised for the standard Elise. No chassis rear longerons are used, but a thick machined alloy plate is bolted to each rear corner of the subframe to support the carbon fibre rear aerofoil. The special roll over bar comprises individual hoops for driver and passenger, interlinked to form a crossbraced structure, fabricated from oval section steel tubing, with back stays anchoring to the rear aerofoil mounting plates. The composite front crash structure is revised to accommodate the new body, and is supplemented by a new aluminium front undertray which incorporates longitudinal rivetted box sections.

Note that, as on the standard Elise, the bolted on closing panel below the fuel tank bay, is a structural panel and contributes to the rigidity of the chassis. On no account should the car be driven with this panel removed.

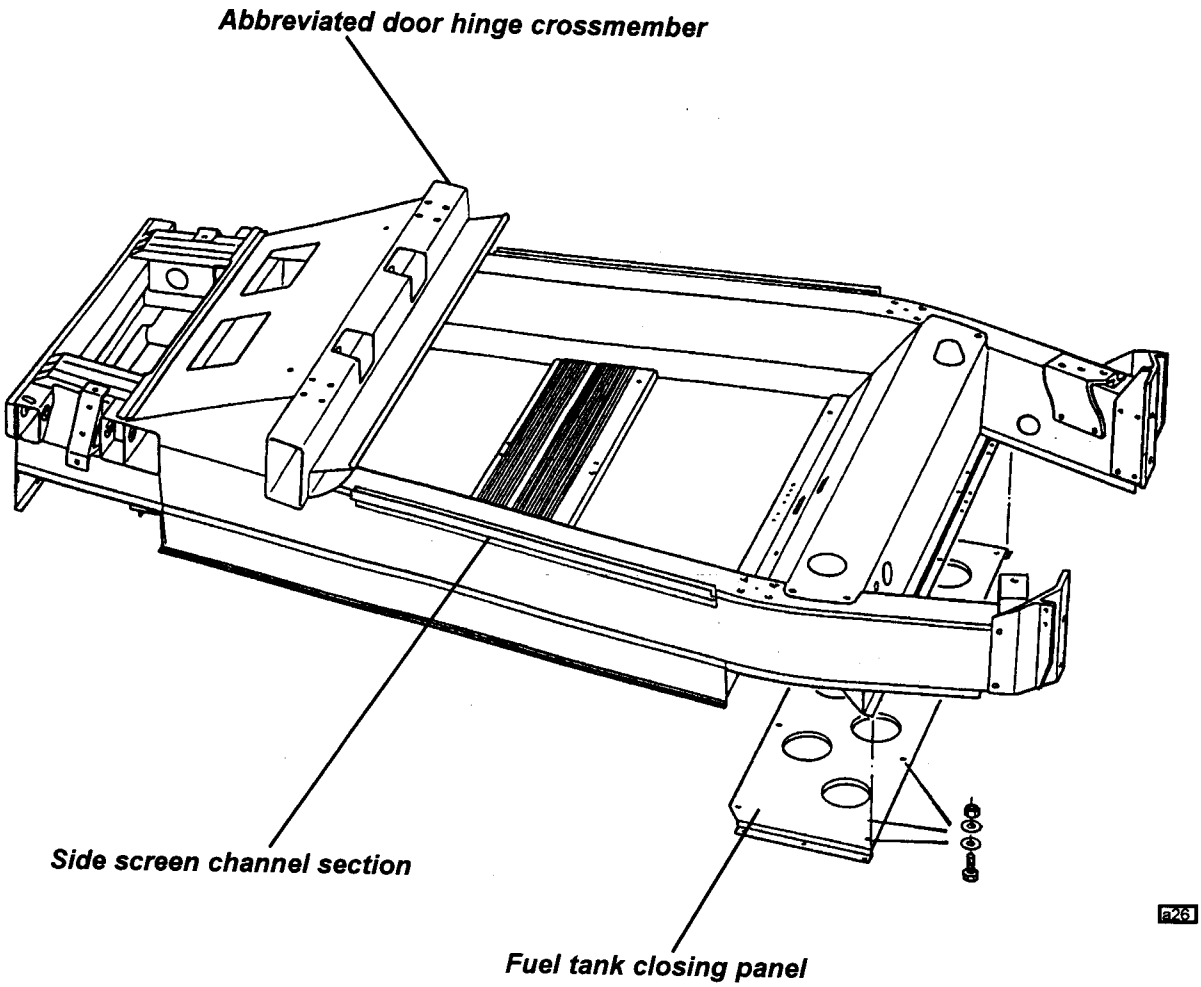

340R.B - BODY

The non-structural composite body structure is minimalist and functional, with the exceptionally light weight contributed to by the exclusion of opening doors or a roof structure. The principal body mouldings are as follows:

Cockpit Tub: Single piece moulding includes the scuttle, cockpit coaming and rear bulkhead. Bonded to the chassis with elastomeric adhesive.

Side Closing Panels: Closing panel between outboard top edge of tub, and top of chassis side rail, extending rearwards to form the engine bay side walls and provide support for the topshell.

Cockpit Side Screens: The cockpit sides are made from translucent polycarbonate sheet, bonded to the chassis and upper side panels.

Topshell: Single piece moulding includes the whole nose section, cockpit surround and rear body deck. Secured with threaded fasteners. Incorporates two removeable access panels at the front, each of which is secured by four threaded fasteners. The engine lid at the rear is fixed by nine threaded fasteners.

Sill Panels: Run from behind each front wheel to sweep upwards ahead of the rear wheels. Bonded to the chassis with elastomeric adhesive.

Side Intake Ducts: Bolted to side closing panel to admit air into engine compartment.

Front Spoiler/Splitter: One piece moulding bolted to the topshell, includes splitter panel beneath nose and twin deck aerofoils ahead of each front wheel.

Windscreen Frame: One piece composite moulding similar in concept to standard Elise, but excludes fascia top, and accommodates shorter windscreen.

Engine Bay Rear Wall: Composite panel bolted to topshell. Removeable for competition use.

Rear Shroud: Composite panel protects silencer and supports rear diffuser. Bolted via brackets to the rear subframe.

Rear Aerofoil: Carbon fibre moulding bolted to alloy support plates.

Mudguards: Separate, close fitting carbon fibre mudguards are used on each wheel, mounted to the hub carrier.

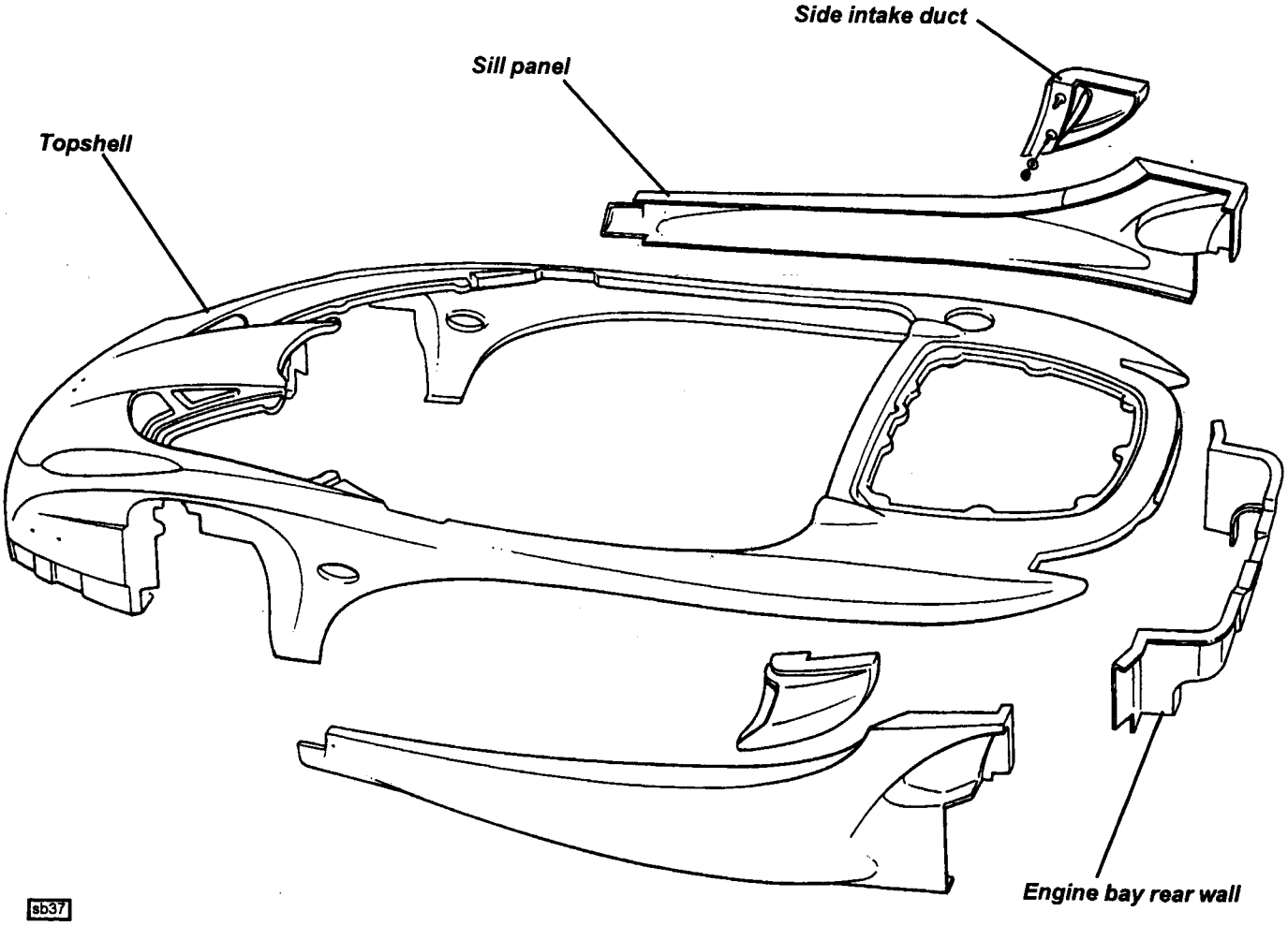

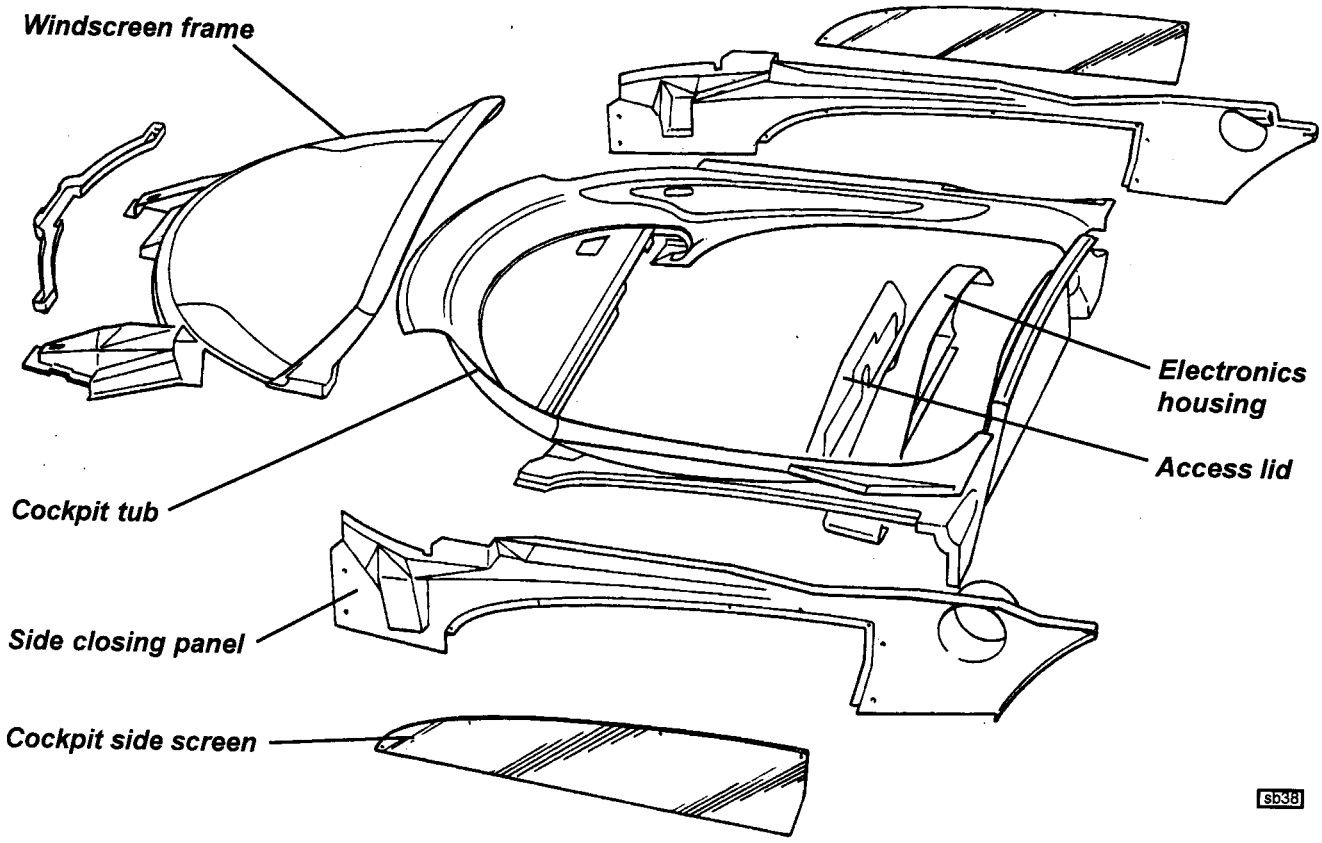
Windscreen frame
Electronics housing
Access lid
Cockpit tub
Side closing panel
Cockpit side screen
sb38

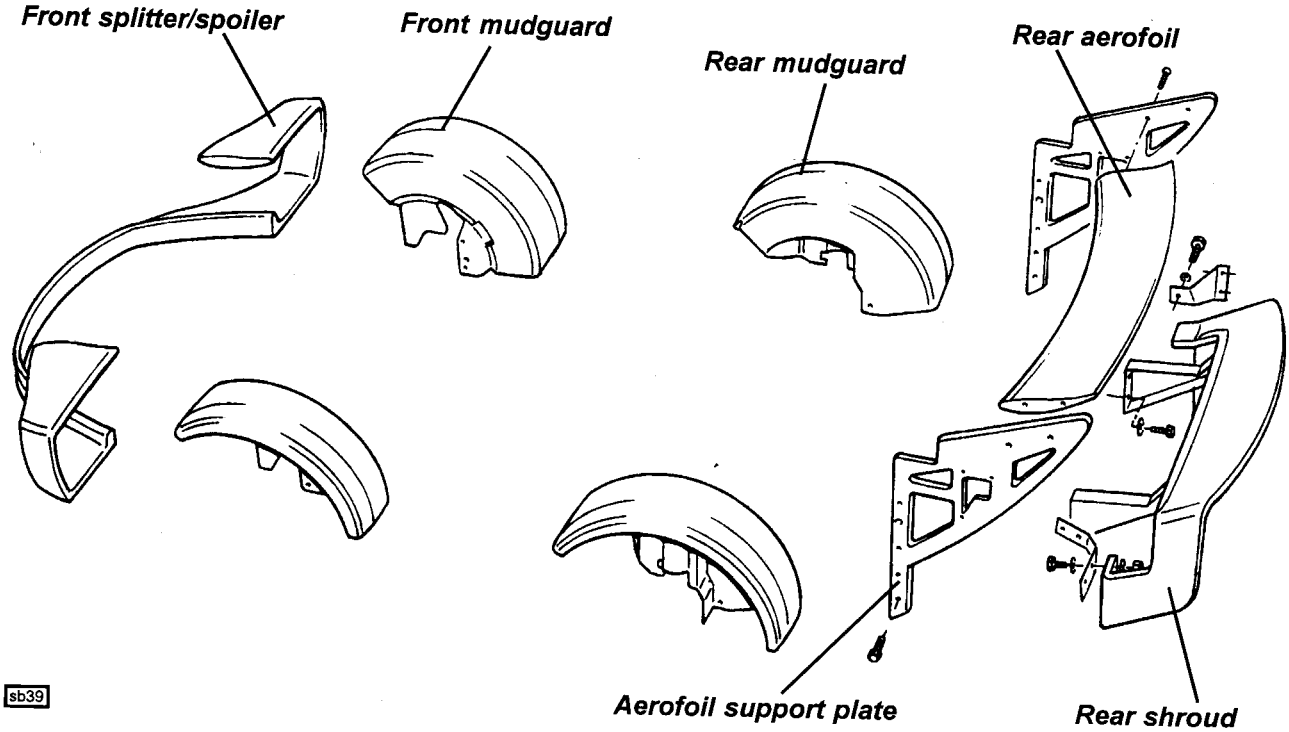
Front splitter/spoiler
Front mudguard
Rear mudguard
Rear aerofoil
sb39
Aerofoil support plate
Rear shroud

Removal of Topshell

The body topshell is secured by threaded fasteners. Removal of the topshell requires also that the seats be removed and the roll over bar fixings released to allow the bar to be tilted forwards.

1. Remove the rear aerofoil from the mounting plates.

2. Remove both seats from the car by releasing the seat runners from the floor and unthreading the harness straps.

3. Release the spherical vacuum reservoir from the roll over bar left hand backstay, and cut any tie wraps around the backstays. Unplug the rear harness connector at the left hand lower corner of the engine bay.

4. Release the roll over bar from the top of both chassis side rails, and release both backstays from the aerofoil mounting plates. Lean the roll over bar forwards to allow sufficient clearance for topshell removal.

5. Remove both outside mirrors, and disconnect the side repeater lamps.

6. Remove the front body access covers and disconnect the front harnesses (2) at the outboard rear corner of the driver's side access hatch.

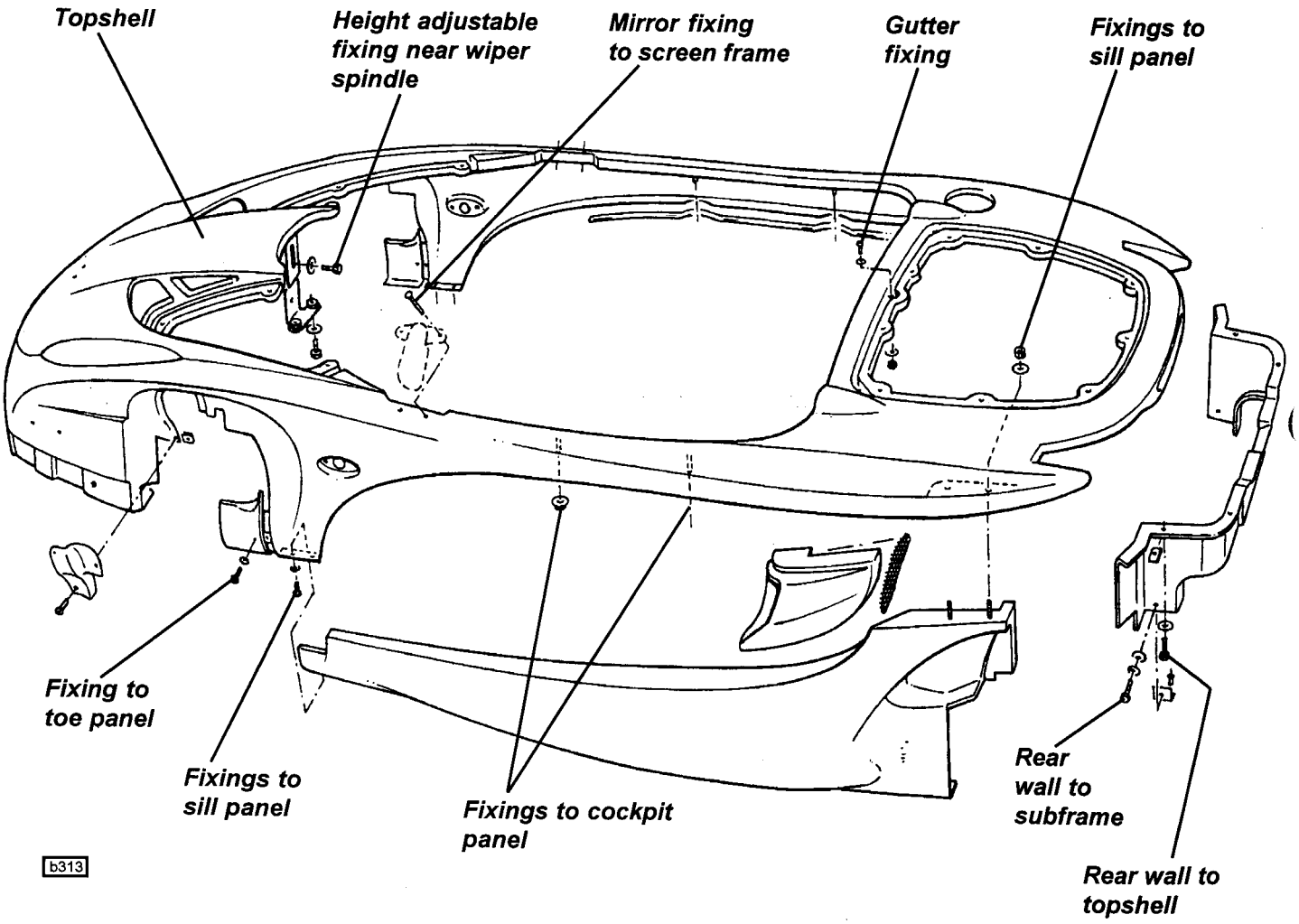

7. Remove the single fixing securing the front body spine to the plinth below the wiper spindle.

8. Remove the front undertray.

9. Remove the two screws at each side securing the topshell to the underside of the side sill behind the front wheels, and the single adjacent screw securing the topshell leg to the toe panel.

10. Remove the two nuts each side securing the topshell to the cockpit coaming.

11. From the front edge of the engine lid gutter, remove the three socket head fasteners.

12. From inside the engine bay, remove the two nuts securing the topshell to each top rear end of the sill panel.

13. Release the fixing securing each side of the engine bay rear wall to the subframe.

14. Protect (or remove) the front mudguards, and the sides of the windscreen pillars from scrape damage before lifting the rear of the topshell, and manoeuvring over the windscreen and off the front crash structure.

Fitment of Bonded Body Panels

The cockpit tub, windscreen frame, side closing panels and cockpit side screens are bonded, in that assembly order, to the chassis and other panels using the polyurethane adhesives and techniques outlined in section BM. Windscreen fitment is as described in section BN.13.

Instrument Mounting Rail

The curved mounting rail for the instruments is a hollow composite moulding, secured to the cockpit tub with two screws at the passenger end, accessible from beneath the passenger side fascia, and a single screw at the driver's end. For access to the latter, it is necessary to remove the topshell to expose an access hole in the side closing panel.

340R.C - FRONT SUSPENSION

The 340R is fitted with the Elise Sport suspension package which includes adjustable spring platform Koni dampers with the shorter and stiffer springs, and the uprated front anti-roll bar in Nylon chassis mounting blocks. Standard Elise wishbones are used, but are powder coated silver, as are the steering arms and lower ball joint plinths.

Two variations of suspension geometry are specified; one for road use (with Yokohama or Pirelli tyres); and one optimised for track use with increased negative camber and toe settings. Ride height for both applications is common at 100mm front and 110mm rear, with sport kit steering rack positioning plates factory fitted. The standard setting for the front anti-roll bar is the central of 5 available holes.

Geometry

Ride height (for geometry check)	- front	100 mm below front end of chassis siderail
	- rear	110 mm below rear end of chassis siderail
Steering axis inclination		12° nominal
Castor		+ 3.8°; ± 0.2°
		max. side/side 0.2°
Road use (Yokohama A038-R or Pirelli P Zero tyres):		
Camber		- 0.5°; + 0.1°, - 0.2°
		max. side/side 0.2°
Alignment		0.2 mm toe-out overall; + 0.2 mm, - 0
Dry track use (Yokohama A038-R tyres):		
Camber		- 1.8°; + 0.1°, - 0.2°
		max. side/side 0.2°
Alignment		0.5 mm toe-out overall; + 0.2 mm, - 0

340R.D - REAR SUSPENSION

The 340R is fitted with the Elise Sport suspension package which includes adjustable spring platform Koni dampers with the shorter and stiffer springs. Standard Elise forged steel hub carriers and wishbones are used, with the wishbones, 'integral stud' type toe-links and upper ball joint plinths powder coated in silver.

Two variations of suspension geometry are specified; one for road use (with Yokohama or Pirelli tyres); and one optimised for track use with increased negative camber and toe settings. Ride height for both applications is common at 100mm front and 110mm rear, with sport kit steering rack positioning plates factory fitted. For optimum rear bump steer set up information, refer to sub-section XA.8.

Geometry

Ride height (for geometry check)	- front	100 mm below front end of chassis siderail
	- rear	110 mm below rear end of chassis siderail
Road use (Yokohama A038-R or Pirelli P Zero tyres):		
Camber		- 2.0°; + 0.2°, - 0 max.side/side 0.2°
Alignment		1.5 mm toe-in each side; + 0.2 mm, - 0 max.side/side 0.2 mm
Dry track use (Yokohama A038-R tyres):		
Camber		- 2.7°; ± 0.2° max.side/side 0.2°
Alignment		2.5 mm toe-in each side; + 0.2 mm, - 0 max.side/side 0.2 mm

340R.E - ENGINE

The engine is based on the Rover 1.8 litre 'K' series unit, and is reworked in a similar way to the VHPD 190 race version, but tuned for road use. Output of the engine is as follows:
Max. power; 132.5 kW (177.7 bhp) @ 7,800 rpm
Max. torque; 172 Nm (127 lbf.ft) @ 6750 rpm

Performance measures include a big valve cylinder head, re-profiled inlet and exhaust camshafts, a new cast alloy 4-branch intake manifold with individual throttles, large intake airbox and performance air filters, large diameter 4-2-1 exhaust manifold and new muffler, lightweight flywheel, Lotus engine management system with maxiumum engine speed limited to 7,800 rpm. Engine durability modifications include a forged crankshaft, new forged connecting rods, forged pistons with revised rings, mechanical tappets.

Engine Management Component Location

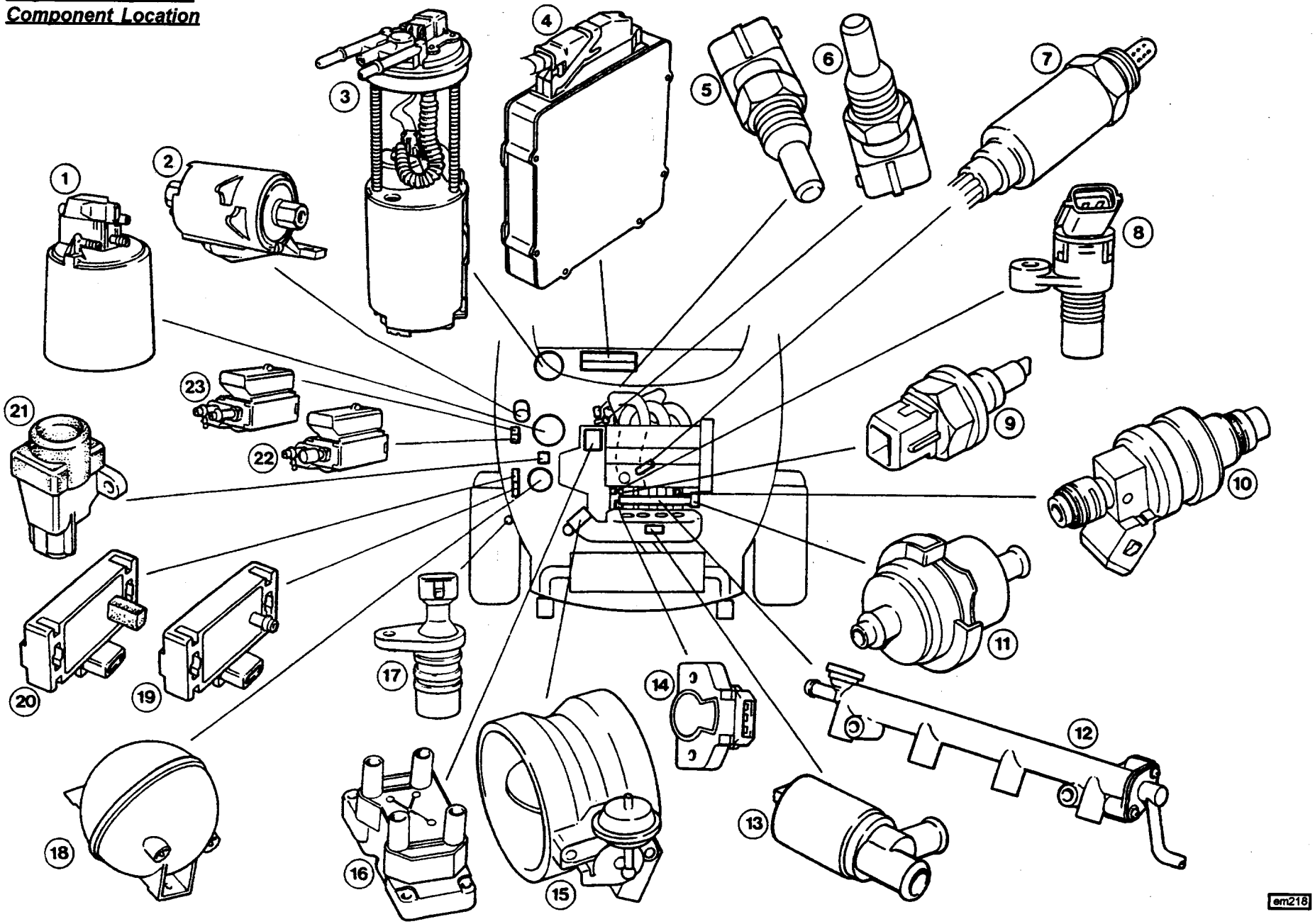

Key to engine management component location diagram

1. Evaporative emission (charcoal) canister
2. Fuel filter
3. Fuel pump assembly
4. Electronic Control Module (ECM)
5. Engine Coolant Temperature (ECT) sensor (brown)
6. Coolant temperature gauge sender (blue)
7. Oxygen sensor
8. Crankshaft position sensor
9. Manifold Air Temperature (MAT) sensor
10. Fuel injector
11. Fuel pressure regulator valve
12. Fuel rail
13. Idle Air Control (IAC) valve
14. Throttle Position (TP) sensor
15. Intake resonator valve
16. Ignition coil pack
17. Vehicle speed sensor
18. Vacuum reservoir
19. Manifold Air Pressure (MAP) sensor
20. Barometric pressure (BARO) sensor
21. Inertia switch
22. Resonator locking solenoid valve
23. Resonator charging solenoid valve

Engine Management

The engine management electronic controller is common with the Esprit V8 and uses some of that model's components, including:

- Idle Air Control (IAC) valve; mounted on the rear of the engine and connected by hose between the intake airbox backplate and ports in the underside of each inlet manifold tract.
- Ignition Coil Pack; one of the two identical V8 coil packs, mounted on the rear of the cylinder head.
- Electronic Control Module (ECM); mounted on the cabin rear bulkhead - controls engine management systems including fully sequential injection and direct ignition.
- Manifold Air Pressure (MAP) and Barometric pressure (BARO) sensors; mounted on the engine bay LH wall.

Other engine management components are as standard Elise.

The OBD2 (On Board Diagnostics version 2) connector socket is located within the electronics box on the cabin rear bulkhead. For fault diagnosis, the 'Tech 1' tool, including the Esprit V8 cartridge, should be plugged into this socket, and any trouble codes read in conjunction with Service Notes manual 'Section EMM'. A limited range of trouble codes are available:

Trouble Code		*Description*
P0107	Manifold Absolute Pressure	Circuit low input
P0108	Manifold Absolute Pressure	Circuit high input
P0112	Intake Air Temperature	Circuit low input
P0113	Intake Air Temperature	Circuit high input
P0117	Engine Coolant Temperature	Circuit low input
P0118	Engine Coolant Temperature	Circuit high input
P0122	Throttle Position	Circuit low input
P0123	Throttle Position	Circuit high input
P0131	Oxygen Sensor	Circuit low voltage
P0132	Oxygen Sensor	Circuit high voltage
P0201	Injector Circuit Malfunction	Cylinder 1
P0203	Injector Circuit Malfunction	Cylinder 3
P0205	Injector Circuit Malfunction	Cylinder 4
P0207	Injector Circuit Malfunction	Cylinder 2
P0601	ECM Integrity	Watchdog
P0606	ECM Integrity	Checksum
P1100	Fuel Pump	Relay or ciruit open
P1101	Fuel Pump	Relay or ciruit shorted
P1106	Barometric Pressure	Circuit range/performance problem
P1107	Barometric Pressure	Circuit low input
P1108	Barometric Pressure	Circuit high input
P1420	Battery Voltage	Too high
P1421	Battery Voltage	Too low
P1501	Resonator Valve	Not closing
P1502	Resonator Valve	Not opening

Intake System & Resonator Valve: A new short intake manifold assembly incorporates individual inlet tract butterfly throttles operated via cable quadrant between cylinders 2 & 3. A carbon fibre airbox, bigger still than the Sport 190 version, is supplied with air via large diameter trunking terminating at the left hand lower corner of the engine bay. Incorporated in the intake trunking at the entrance to the airbox, is a butterfly valve which is controlled by the engine management system, and is designed to suppress resonant intake noise under certain engine operating conditions. The valve is sprung open and is closed by a vacuum actuator supplied via a pair of solenoid valves mounted on the LH side of the engine bay. The solenoid valves are controlled by the engine management ECM which is programmed to close the valve when accelerating with wide throttle through the lower gears at about 30 - 40mph.
The flap capsule is connected to a vacuum charging solenoid valve which either ventilates the the capsule, or connects it to a vacuum locking solenoid valve. The locking valve either seals the charging valve, or connects with the manifold vacuum supply via a reservoir mounted on the roll over bar back stay.

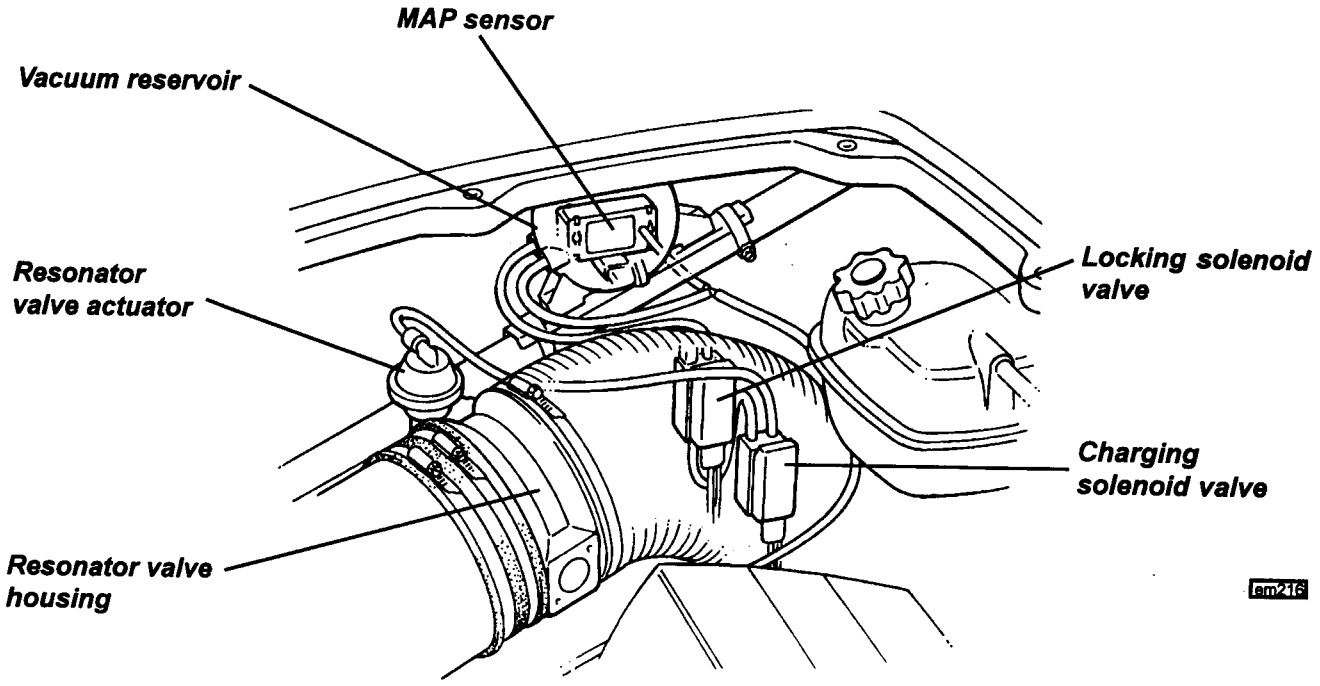

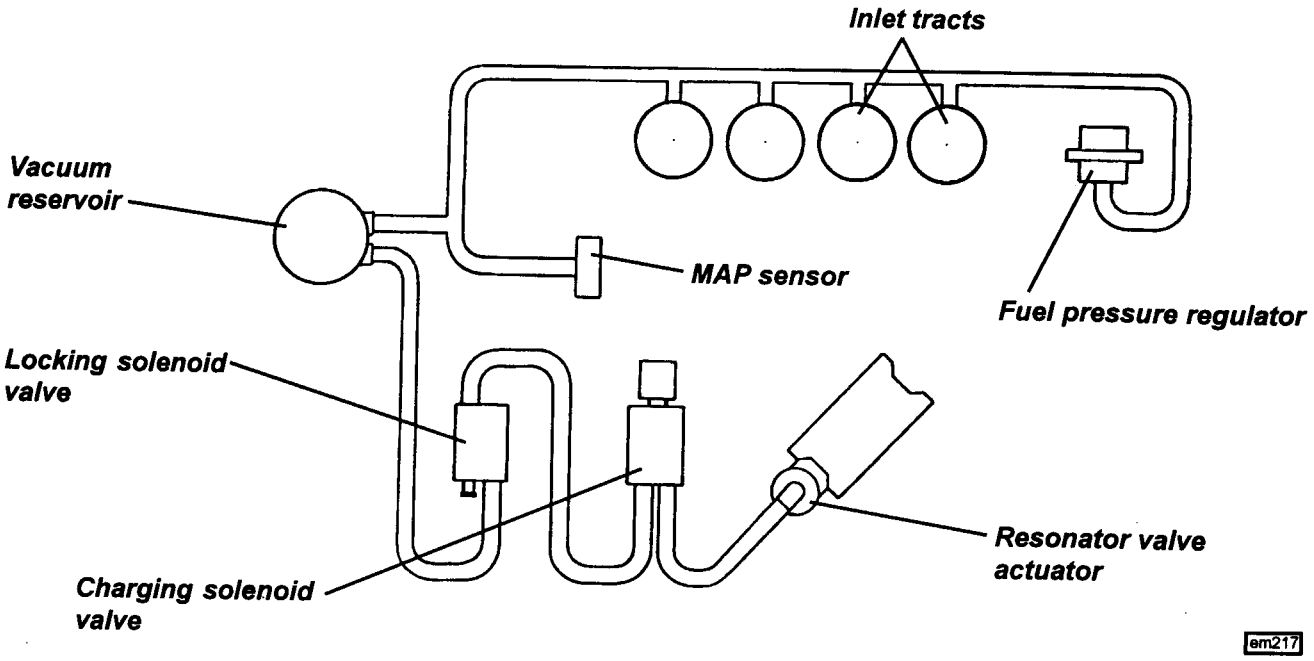

The sequence of operation is as follows:

a). Normal running - Both solenoid valves off - Flap valve open

The flap capsule is vented to atmosphere, and the flap valve is sprung open.

Inlet manifold sealed by the locking capsule.

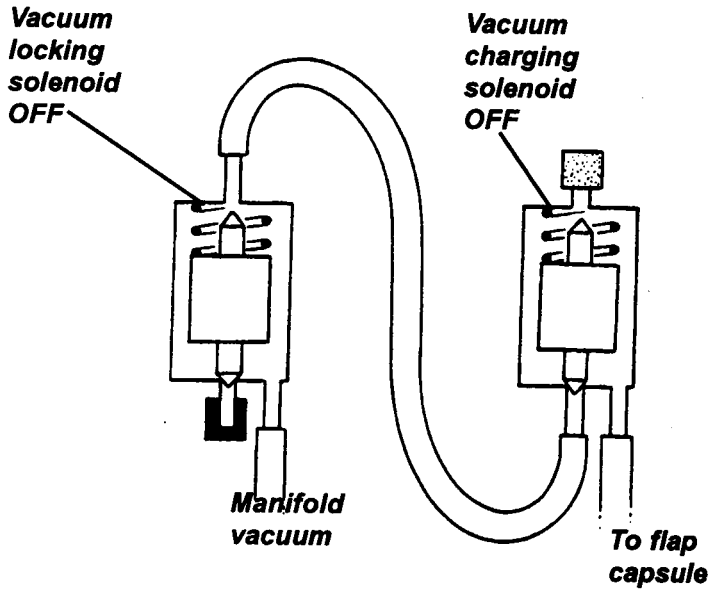

b). Cruising at 30 mph in second or third gear - Charging solenoid on - Flap valve closed

Charging solenoid is energised.

Flap capsule is connected to manifold vacuum - flap valve is closed.

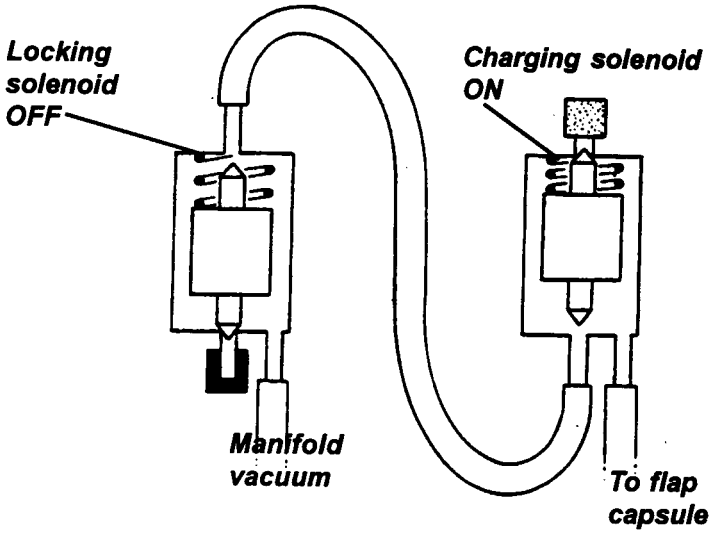

c). Cruising or accelerating at 30 mph in second or third gear - Both solenoids on - Flap valve closed

Within two seconds of condition (b) occuring, the vacuum locking solenoid is also energised and seals the vacuum in the flap capsule. This is necessary in order to prevent loss of manifold vacuum during wide throttle acceleration resulting in insufficient vacuum at the flap capsule to maintain flap closure.

When the conditions required for intake resonance suppression no longer apply, both solenoid valves are de-energised and the flap valve is opened.

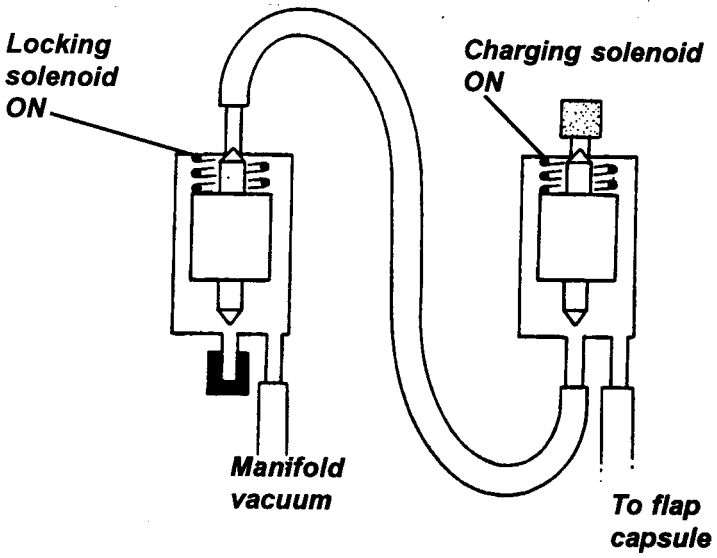

em215

Air Cleaner: The Elise 340R uses two identical Pipercross conical foam air cleaner elements contained within the air intake trunking; a primary filter mounted at the inlet end of the trunking, and a secondary filter mounted immediately after the resonator valve at entrance to the airbox. When the vehicle is operated in a relatively clean environment, the primary filter should be cleaned every 'A' service, and the secondary filter every 'B' service, but where a dusty or smog laden atmosphere prevails, more frequent servicing will be required dependent on the level of pollution. When removing either filter, take care not to contaminate the engine side of the duct or airbox with dirt. Follow the filter manufacturer's cleaning instructions:

1. Dislodge any large embedded dirt by tapping the filter gently. Brush with a soft bristle brush to remove other dirt.
2. Spray Pipercross foam air filter cleaner liberally onto the entire filter. Let soak for 10 minutes.
3. Never use other cleaning agents e.g. gasoline, caustic strong detergents or solvents. Never use steam cleaners or a high-pressure car wash. Doing so will invalidate the warranty.
4. Rinse off the filter with low-pressure tap water from the clean side to the dirty side. This will remove dirt and not drive it into the filter.
5. Always let excess water drain from the filter Let the filter dry naturally. Never use compressed air; open flame or hot air dryers.
6. After cleaning the filter, Pipercross Dirt Retention Additive (DRA) must be re-applied. Pipercross DRA is a very efficient high tack polymer. Never use motor oil, diesel fuel, ATF or WD40.
7. Re-install the filters and intake ducting.

Exhaust System: The 340R engine uses a special exhaust manifold fabricated from 45mm steel tube, leading via a short flexible section to the standard catalytic converter, and then into a new transverse stainless steel muffler with twin high level outlets. The muffler is wrapped in carbon fibre faced insulation to provide heat protection.

Starting Procedure: The fuel injection and engine management system controls fuel delivery and engine settings under all normal operating conditions.

i) If necessary, mobilise the engine by pressing the ignition key head transmitter button (see 'Vehicle Security Alarm').

ii) Insert the ignition key into the switch/steering lock and turn to position 'II' to switch on the ignition (note that position III is not operative).

iii) Press the accelerator pedal to one quarter travel (approx. 25mm) and press the starter button in the centre of the fascia. As soon as the engine starts, release the button and adjust the accelerator position to maintain 2,000 rpm for 10 seconds to minimise emissions. If the engine fails to start within 15 seconds, stop cranking and pause for 10 seconds before a second attempt.

iv) If difficulties are encountered, press the accelerator half way down, and repeat (iii).

v) If the engine still fails to start, it is likely that it will have become fuel flooded. Provision is made to cut off the fuel supply completely when cranking, by fully depressing the accelerator. Repeat the starting procedure holding the pedal fully down, and release immediately the engine starts.

Idle Speed: Engine idle speed is controlled electronically by the engine management computer, and is normally about 1250 rpm. An uprated idle speed is required under certain operating conditions including the engine warm up phase, during which time the raised idle helps to speed the time taken for the catalytic converter to reach operating temperature, as well as inhibiting engine stall. Idle speed will return to normal automatically when the engine has warmed sufficiently.

340R.F - TRANSMISSION

The 340R uses the same close ratio transmission as is fitted to the Elise 111S. Compared with the standard transmission, the final drive is lowered from 3.94:1 to 4.20:1, in conjunction with raised first and second ratios, and a lowered fifth. The mph/1000 rpm in fifth drops from 22.9 (std) to 19.4 (close ratio). The transmission may be identified by the serial number prifix on the bar coded label fixed to the top of the clutch housing:

Standard: C6BP
Close ratio: B4BP

The only lubricant recommended for the Elise transmission is Texaco MTF 94, available under Lotus part number A111F6017V.

Gear	Std. Ratio	Close Ratio	Std. Ratio		Close Ratio	
			mph/1000 rpm	km/h/1000rpm	mph/1000 rpm	km/h/1000rpm
First	3.17 : 1	2.92 : 1	5.5	8.9	5.6	9.0
Second	1.84 : 1	1.75 : 1	9.5	15.3	9.4	15.1
Third	1.31 : 1	1.31 : 1	13.4	21.5	12.6	20.3
Fourth	1.03 : 1	1.03 : 1	16.9	27.2	16.0	25.7
Fifth	0.77 : 1	0.85 : 1	22.9	36.8	19.4	31.2
Reverse	3.00 : 1	3.00 : 1				
Final Drive	3.94 : 1	4.20 : 1				

i:\service\table\sn_tdm_1.tbl

340R.G - WHEELS & TYRES

The 340R uses, according to market, either special Lotus styled 10 spoke magnesium wheels, made by Tecnomagnesio, or 10 spoke alloy wheels made by Rimstock. Both types are mounted on standard Elise hubs using longer (42mm protrusion instead of 36mm) studs, but standard wheelnuts. The magnesium wheels are common in size and inset to the race wheel set (6J x 15 front, 8J x 16 rear, inset 10mm front and rear), with the alloy wheels differing only in the rear rim width (7.5J) and rear inset (4mm). All wheels should be carefully and regularly cleaned, especially if used on salted roads.

Before fitting magnesium wheels, a coating of Duralac anti-corrosive compound (A111C6017S) should be applied to the hub mating face to prevent electrolytic corrosion. Wheel nut torque for all wheels is unchanged from standard Elise at 80 - 85 Nm, but it is **most important** that following the first fitment of a NEW MAGNESIUM wheel, the wheel nuts are retorqued after 25 miles driving to allow for material settlement.

The Yokohama A038-R tyres fitted to the Elise 340R have been jointly developed by Lotus and Yokohama specifically for Elise models, and whilst the specification is optimised for track use, the tyre is road legal in the U.K. and some European markets. The tyre offers a high level of grip in both dry and wet track conditions combined with good braking performance. The water clearing ability of the tyre is limited in standing water, such that appropriate allowances should be made in these conditions. For competition use, the eligibility of the tyre should first be checked with the appropriate organising authority. Full tyre specification is detailed in sub-section XA.15. Note that the tyre tread pattern is directional, with the correct rotation marked by an arrow on the sidewall.

For cars used predominately on public roads, it may be preferred to fit Elise 111S specification Pirelli P Zero tyres with appropriate suspension geometry (see front and rear suspension sections).

340R.H - STEERING

All the steering components used on the 340R are as standard Elise, except the steering wheel centre pad which is trimmed in blue Alcantara, and the rack positioning plates which are 'sport' specification to suit the lowered ride height. The Sport removeable wheel may be fitted for track use. For full details refer to section HE and XA.

340R.J - BRAKES

The 340R uses the drilled cast iron discs and brake pads as fitted to the Elise 111S. For full details refer to section JH.

340R.K - COOLING

The cooling system is unchanged from standard, with the exception of the radiator duct/crash structure which is similar in concept but reshaped. A front mounted oil cooler is an optional fit.

340.L - FUEL SYSTEM

The fuel system is based on that of the standard Elise, but the fuel tank filler spigot is angled more acutely to clear the cabin rear bulkhead. New hoses connect the tank to the filler neck, which uses a flush fitting lockable cap. As the cap does not incorporate the safety pressure relief function provided by the standard cap, an additional safety valve is fitted into the breather pipe connecting the filler neck to the roll over valve. This valve functions only in cases of extreme pressure change to prevent potential fuel tank damage.

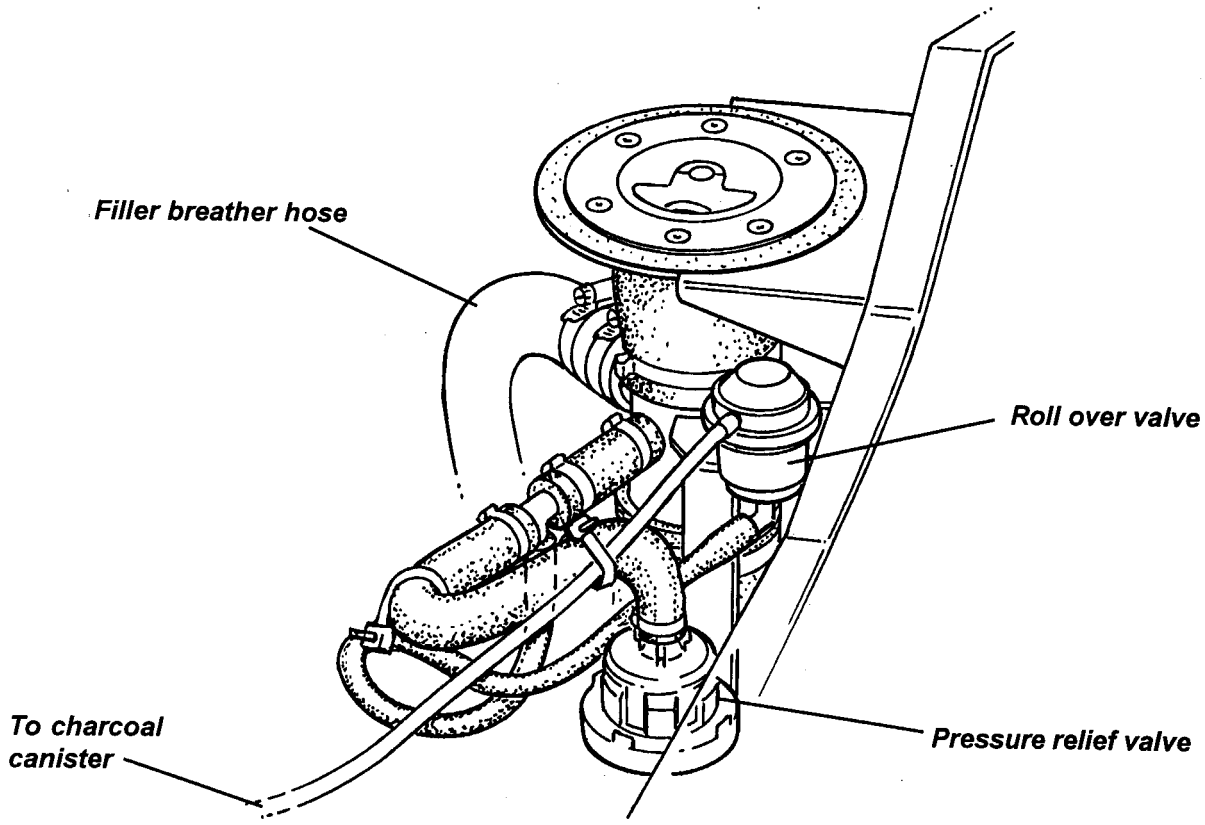

162

340.M - ELECTRICAL

VEHICLE SECURITY

The 340R uses a Meta security system as either an M36 T2 electronic immobiliser meeting Thatcham category 2 requirements, or, as an optional upgrade, a full M99 T2 alarm system incorporating M23 cockpit intrusion sensing and a self powered siren, which meets Thatcham 1. The Lucas 5AS security module used on the standard Elise is not fitted. The Meta system operates as follows:

Keys & Vehicle Security Alarm

A single key operates the combined ignition switch/steering lock, with a second, smaller key type for the fuel filler cap. The head of each ignition key incorporates an electronic transmitter for operation of the engine immobiliser and security alarm system. Duplicates of both keys are supplied with the new vehicle. The key numbers are stamped on the keys themselves, and should be recorded by the owner and kept with the vehicle documents to enable the dealer to have replacements made if necessary.

Standard Immobiliser

In order to provide a measure of automatic vehicle security, independent of any driver initiative, the Meta M36 T2 immobiliser will 'passively' immobilise the engine's cranking and running circuits about 20 seconds after the ignition has been turned off. The immobilised state will be indicated by the immobiliser tell tale on the fascia top, ahead of the instruments, blinking once every two seconds.

To mobilise the engine, press once the button on the transmitter key head (with ignition either on or off). Mobilisation will be acknowledged by the tell tale being extinguished.

Upgraded Security System

For enhanced protection from theft and vandal damage, the Elise 340R may be specified factory built with a 'Meta' vehicle security system which incorporates the following features:

- Ingress protection using sensing switches on the front access panels and engine lid.
- Selectable cockpit intrusion sensing using a microwave sensor.
- Automatic (passive) engine immobilisation to prevent the engine from being started.
- Self powered siren to maintain protection if the vehicle battery is disconnected.
- 'Dynamic coding' of the transmitter keys; Each time the transmitters are used, the operating frequency is randomly changed to guard against the possibility of code copying.

Passive Immobilisation

In order to provide a measure of automatic vehicle security, independent of any driver initiative, the Meta M36 T2 immobiliser will 'passively' immobilise the engine's cranking and running circuits about 20 seconds after the ignition has been turned off. The immobilised state will be indicated by the alarm tell tale on the fascia top, ahead of the instruments, blinking once every two seconds.

To mobilise the engine, press once the button on the transmitter key head (with ignition either on or off). Mobilisation will be acknowledged by the tell tale being extinguished

Arming the Alarm

Remove the ignition key and check that the engine lid and front access panels are closed. Press the transmitter button for about two seconds. This command will be acknowledged by:

- Two flashes of the hazard warning lamps;
- The tell tale on the fascia top lighting, and blinking off once a second. After a set-up period of 25 seconds has elapsed, the tell tale will go out, and blink on once a second.

Check that these indications occur. If not, press the button a second time, as the first press may have only switched off the passive immobilisation (see above). Note that if the system is armed when the engine lid or a front access panel is not fully closed, four beeps will be heard as warning. If still open after 25 seconds, the alarm will be armed with that switch excluded from the circuit.

After arming the system, a period of at least 25 seconds must elapse before all functions and sensors become fully active. After this time, the alarm will be triggered by any of the following actions:

- Opening the engine lid or front access panel;
- Movement detected within the cockpit;
- Energising the ignition circuit ('hot wiring');
- Interruption of the vehicle battery power supply.

When triggered, the electronic siren will sound and the hazard warning lamps will flash for a period of approximately 30 seconds before closing down and resetting, ready for any further triggering input. If a trigger is continuously present, the alarm will repeat after a short delay, and continue in this sequence for about ten cycles.

To silence the alarm when triggered, disarm as described below.

Disarming the Alarm

To disarm the alarm prior to entering the vehicle, or if the alarm has been triggered, press once the button on the transmitter key. This command will be acknowledged by:

- One flash of the hazard warning lamps;
- Extinguishing of the alarm tell tale on the fascia top.

If the alarm had been triggered during the last armed period, the alarm tell tale will light and 'off blink' a code(s) for about 30 seconds to indicate which of the triggers was responsible:

4 blink offs every 6 seconds - engine lid or front access panels;
8 blink offs every 6 seconds - ignition input;
1 blink off every 6 seconds - microwave sensor;

This coding will be repeated each time the alarm is disarmed until the memory is cleared by pressing the transmitter button with the ignition switched on.

Intrusion Sensing

A microwave sensor is mounted in the rear bulkhead electronics compartment, and is able to detect substantial physical movement within the cockpit, and trigger the alarm. The range and sensitivity of the intrusion sensor may be adjusted if necessary by turning an adjuster screw on the unit.

If desired, the alarm may be armed without the intrusion sensor or battery interruption ciruits being active by:

- with the alarm disarmed, hold the transmitter button pressed for a 4 second period. This will be acknowledged by 3 flashes of the hazard lamps, and blinking of the alarm tell tale.

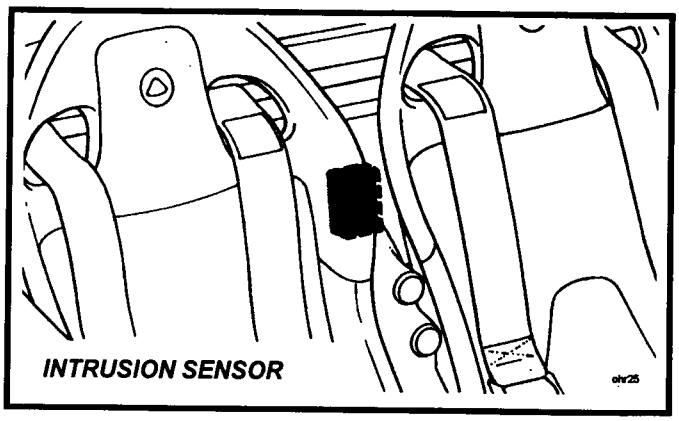

Note:

Intrusion sensing will automatically be reinstated the next time the alarm is armed.
Do not inhibit operation of the radar detector by placing bags or large objects against the cabin rear bulkhead.

Transmitter Key Battery Replacement

The batteries for the key head transmitters should be renewed at six monthly intervals to ensure continuity of operation.

To replace transmitter battery:

a). Use a thin blade to prise apart the two halves of the transmitter key head, and withdraw the battery.

b). The transmitters are powered by a 3v long life lithium battery type CR2032. With normal use, this should last between 3 and 5 years. After opening the new battery packaging, touch only the sides of the battery, and fit the battery into the key case with the positive side (+) upwards as shown.

c). Press the battery case together.

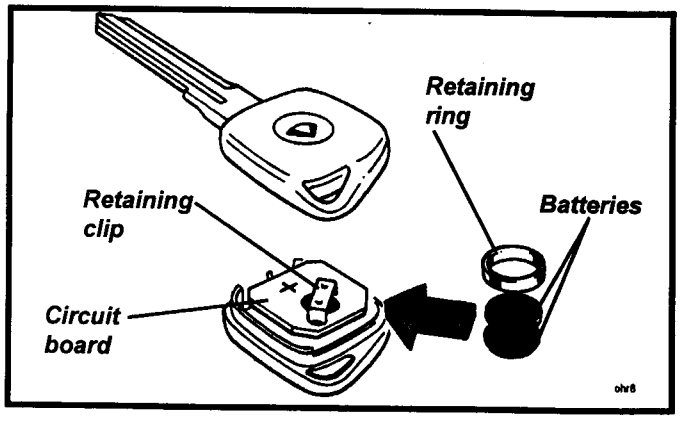

Disconnecting the Vehicle Battery

- Before disconnecting the battery, ensure that the alarm system is disarmed.
- On reconnection of the battery, the alarm will automatically be set. Have the transmitter ready to disarm.

Component Location

The alarm system components are located as follows:

- Electronic Controller: Mounted in the front services compartment chassis well, outboard of the battery.
- Siren Unit: Mounted on the passenger side of the scuttle beam.
- Immobiliser Module: Mounted in the electronics box on the cabin rear bulkhead.
- Intrusion Sensor: Stuck to engine ECM in bulkhead electronics box.
- The engine lid sensor switch is mounted at the rear of the lid aperture.
- The front access lid sensors are mounted at the front of the apertures.

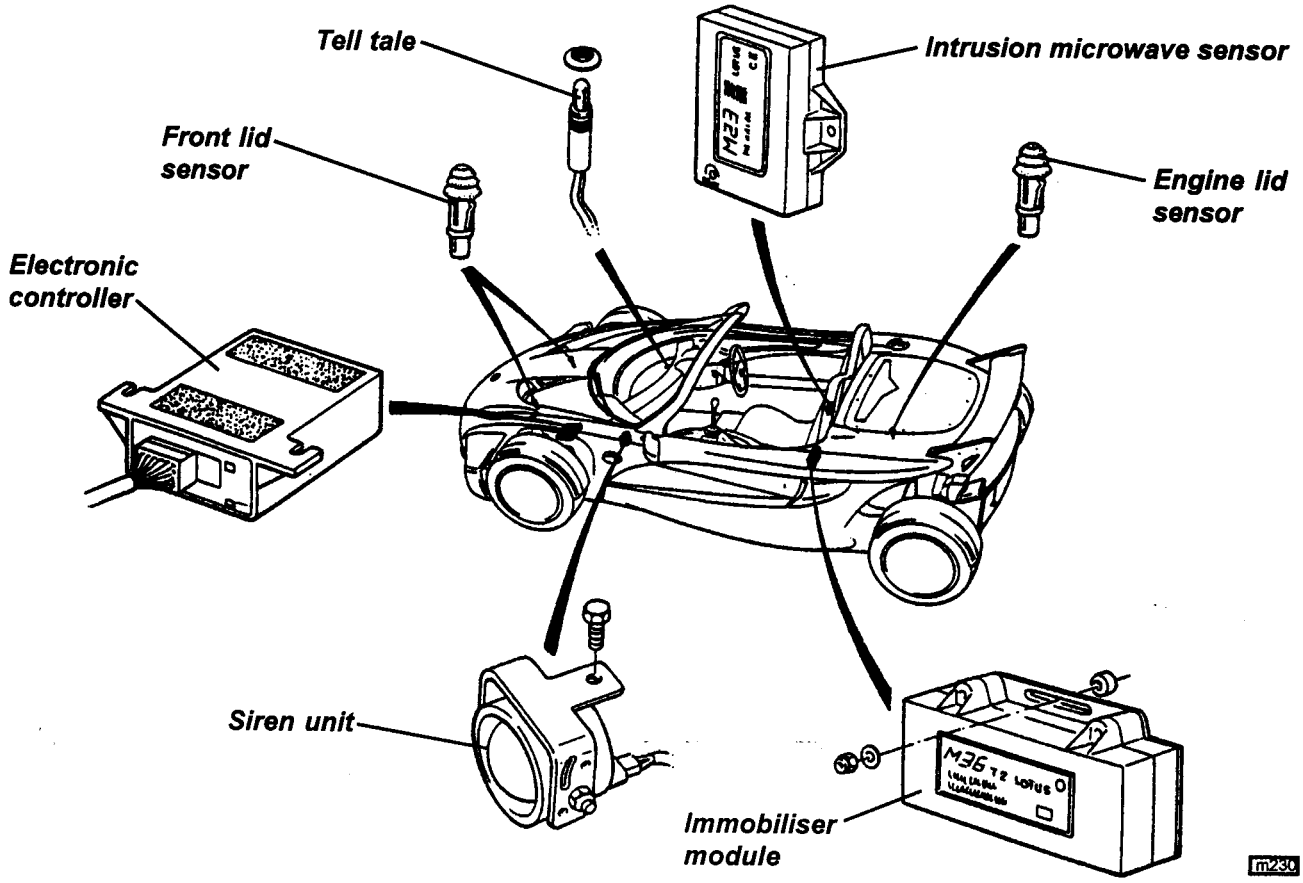

Tell Tale Lamps

Bulb Check

In order to check that the warning systems are operative, all the tell tale lamps should light for two seconds following ignition switch on. If any lamp should fail to light, there is likely to be a fault on that warning circuit.

Seat Belt Tell Tale (red)

As a reminder to fasten the seat belts, the seat belt icon in the tachometer will flash red for about eight seconds following ignition switch on, and will then be extinguished.

Oil Pressure Tell Tale (red)

This red tell tale warns of low engine oil pressure. The lamp will be lit whenever the ignition is on and the engine is stopped, but should extinguish as soon as the engine is started. If the lamp fails to go out after engine start up, or comes on when the engine is running, stop the engine immediately and do not restart until the cause has been investigated and rectified. Continuing to run the engine with little or no oil pressure could cause major internal damage, possibly resulting in seizure.

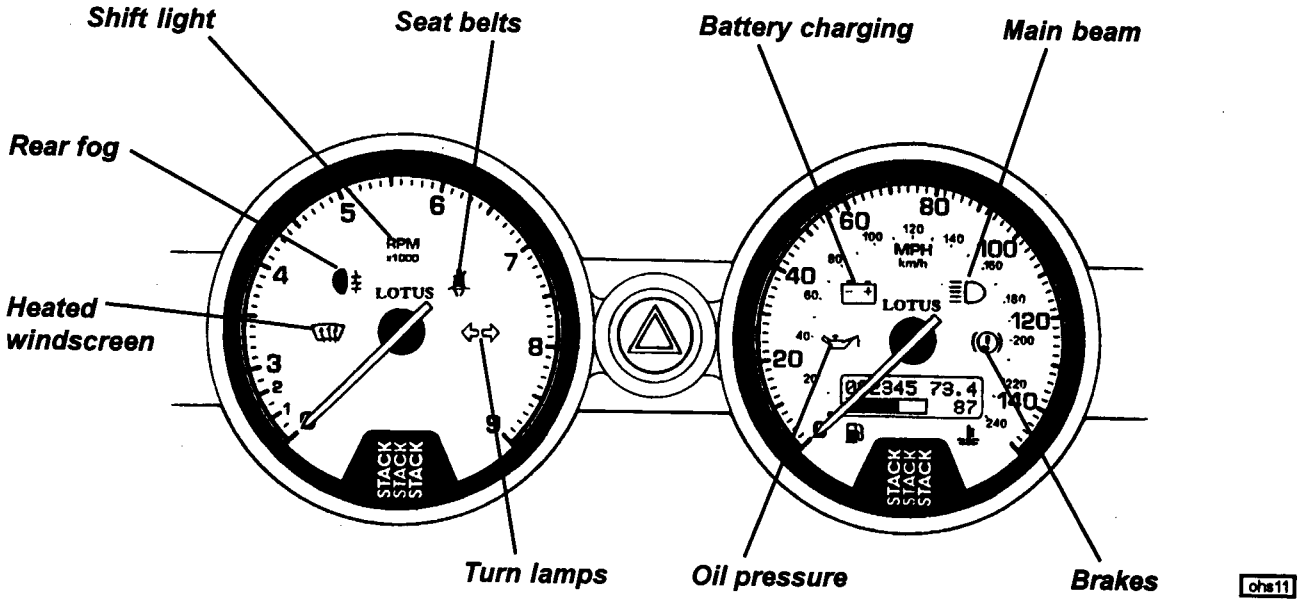

Battery Charging Tell Tale (red)

This red tell tale will light whenever the ignition is on and the engine is stopped. If it lights any time that the engine is running, the battery is not being charged, which may be due to a broken alternator drive belt, or an electrical fault. Urgent attention is required, but as the engine coolant pump is independently driven, the car need not be stranded, subject to battery condition and local circumstances.

Brakes Tell Tale (red)

This tell tale will glow red with the ignition switched on whenever the parking brake is applied, or if the level of brake fluid in the master cylinder reservoir has fallen to a dangerously low level.

Driving the car with the parking brake not fully released will cause overheat damage to the rear brakes. Each time the parking brake is released, check that the tell tale is extinguished. If the tell tale should remain lit after releasing the parking brake, or light any time whilst driving, stop the car immediately, as the level of brake fluid in the master cylinder reservoir may have fallen to a dangerously low level, possibly caused by a hydraulic leak in one of the separate front or rear brake circuits. There is a danger that air may enter the hydraulic system and cause spongey operation and extended pedal travel. The split brake circuit should ensure that emergency braking will remain, but the car should not be driven until the fault has been rectified.

Heated Windscreen Tell Tale (yellow)

This tell tale indicates when the windscreen heating element is energised. Refer to the text below describing the switch function for the operating conditions.

Rear Foglamp Tell Tale (amber)

This amber tell tale indicates when the rear fog lamp is active. The rear fog lamp operates only in conjunction with the ignition and headlamps, and defaults off if either of these circuits is interrupted.

Turn Tell Tale (green)

When the left hand or right hand turn indicators are operating, this green tell tale flashes in unison. The flasher relay may also be heard to operate. If the tell tale fails to light, or flashes at an unusual or irregular rate, check the operation of the turn indicator lamps immediately.

Main Beam Tell Tale (blue)

This lamp glows blue whenever the headlamp main beams are operating.

Shift Light (red)

The shift light provides a visual aid to identifying the optimum upward gearchange point for the exploitation of maximum vehicle performance. The red 'RPM' tell tale will light at engine speeds above 7,600 rpm.

Instruments

Speedometer

This instrument displays, in analogue form, vehicle road speed in either MPH (with a secondary scale in km/h), or km/h according to territory. Recalibration of the needle position will occur during a three second period following ignition switch on. The instrument face is illuminated when the marker lamps are switched on.

Tachometer

The tachometer indicates engine speed in revolutions per minute. A safeguard in the engine management system limits engine speed to 8,000 rpm. Do not run the engine continuously at its maximum speed, or allow overspeeding to occur on the overrun by changing down through the gears too early, as this imposes very high loads on engine components, leading to premature wear and possible failure.

Recalibration of the needle position will occur during a three second period following ignition switch on. The instrument face is illuminated when the marker lamps are switched on. The lenses of both speedo and tacho are treated with an anti-refletcive coating.

LCD DISPLAY PANEL

A liquid crystal display (LCD) panel is incorporated into the speedometer in order to display fuel level, coolant temperature, total distance and trip distance. The panel is blank until the ignition is switched on, with the illumination dimming when the marker lamps are switched on, to that level selected by the panel lights control (see below).

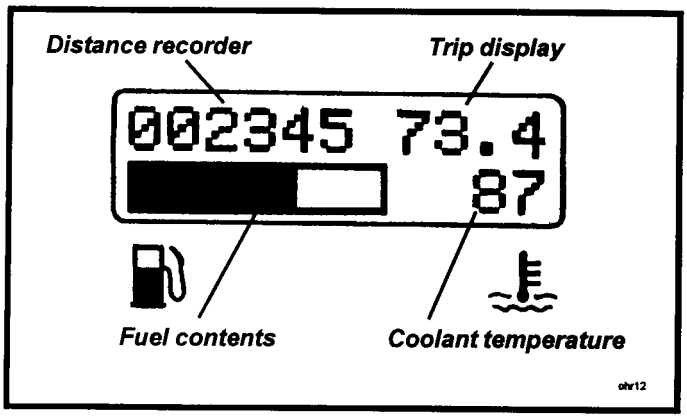

Fuel Contents Display

The bottom left corner of the LCD panel displays in the form of a bar graph, the approximate proportion of fuel remaining in the 36 litre tank. The bar graph displays in eight equal steps, and to highlight a low fuel condition, the display flashes when the level falls to the last eighth.

In order to ensure the vehicle is not stranded, and to protect against the potentially damaging effects of fuel starvation, it is strongly recommended to refuel at the first opportunity when the display flashes.

Coolant Temperature Display

The engine coolant temperature will be displayed at the bottom right hand corner of the panel as soon as the temperature reaches 40°C. The running temperature will fluctuate a certain amount as the operating conditions change, and during periods of idling or in heavy traffic, the temperature may rise to over 100°C, with the cooling fan switching on at approximately 104°C. The display will flash at temperatures over 110°C in order to prompt closer monitoring of high temperatures, but as the pressurised cooling system has a boiling point of over 120°C, only if the temperature approaches this level need there be any cause for concern. If this should occur, allow the engine to idle for a few minutes whilst monitoring the temperature, and if it continues to rise, switch off and seek qualified assistance.

After a heavy snowfall, ensure that the radiator cooling inlet and outlet grilles in the front body are cleared of snow before driving the car, or overheating may occur.

Odometer

A six digit odometer (total distance recorder) reading is displayed at the top left hand corner of the panel, and is calibrated in the same units (miles or kilometres) as is the speedometer.

Trip Recorder

A four digit trip recorder is provided at the top right hand corner of the panel, calibrated in the same units as the speedometer. Below 100, the display includes tenths (0.0 - 99.9), and over 100, whole units (100 - 9999).

In order to zero the trip display, switch on the ignition, and press for a moment (less than one second), the

uppermost switch on the cockpit divider. Note that this dual function button also controls the panel illumination - see 'Instrument & Switch Illumination'.

Fascia Switches

The cockpit central divide contains five push button switches, each of which is pressed once to switch on, and pressed a second time to switch off. A symbol is positioned above each switch to indicate its function, and is backlit blue when the ignition is switched on.

Panel Illumination & Trip Reset

The topmost switch in the cockpit divide controls both the brightness of the panel illumination, and also resets the trip distance recorder.

In order to zero the trip display, with the ignition switched on, press the reset button briefly (less than one second).

The brightness of the instrument illumination is also controlled by this switch. To cycle through the four levels of brightness, switch on the ignition, press and hold the button, and release at the desired setting. Note that with the lights switched on, panel illumination is automatically at the brightest.

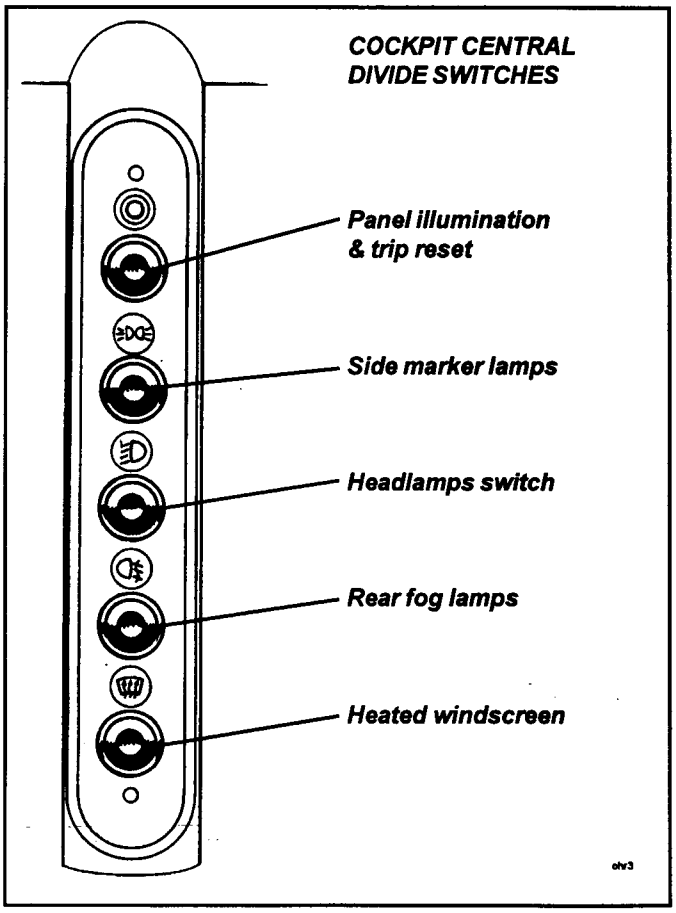

Side Marker Lamps Switch

The second switch down in the cockpit central divide, functions only with ignition, and switches on the front and rear side lamps together with the instrument illumination. *The sidelamps will default to the 'off' condition each time the ignition is switched off.*

Headlamps Switch

The third switch down in the cockpit central divide, functions only with ignition, and when the side marker lamps have been requested by the sidelamps switch. Pressing the headlamps switch under these conditions, switches on the headlamps, in main beam or dip mode dependent on steering column lever switch position.

Note that dip beam is provided by the projector lamp mounted in each acrylic covered front lamp cluster. These lamps remain lit when main beam is selected, and the driving lamps mounted in the radiator air intake aperture are activated.

The headlamps will default to the 'off' condition whenever the ignition is switched off.

Rear Fog Lamp Switch

A single fog guard lamp is fitted centrally on the muffler shield, and is operative only in conjunction with the headlamps. The fourth switch down in the cockpit central divide operates the fog lamp, with an amber tell tale icon in the tachometer face indicating when the lamp is functioning.

In some territories, rear fog lamps may be used legally only in conditions of 'seriously reduced visibility'. Be aware that indiscriminate or forgetful use of the rear fog lamp can cause distraction and discomfort to following traffic. The rear fog lamp circuit is designed to switch off automatically whenever either the headlamps or the ignition is next turned off, requiring that the switch must be pressed again to re-activate the circuit.

Heated Windscreen Switch

The front windscreen is equipped with electrical heating elements in order to provide a defrosting facility for use in extreme conditions.

The heating of the front windscreen is selected by the lower-most switch in the cockpit central divide. The switch is operative only when the engine is running, with a yellow tell tale icon in the tachometer face indicating when the circuit is active. The heating elements place a high demand on the vehicle electrical system, such that circuit should be switched off as soon as the windscreen is cleared. A 15 minute timer automatically turns off the circuit after this period, and an 'off' default will apply when the ignition is switched off.

Hazard Warning Lamps Switch

A push button switch for the hazard warning lamps is located between the instruments, with the red tell tale in the switch button back lit when the sidelamps are switched on to help locate the switch. The switch is operative at all times, and when pressed, flashes all the turn indicator lamps, and the switch tell tale, in unison.

This facility should be used to warn other traffic of a road hazard, possibly including the prescence of the vehicle itself. Use of the hazard warning lamps may be subject to local traffic laws, with which drivers should familiarise themselves.

Column Lever Switches

The steering column lever switches for the turn indicators, headlamp beam/dip/flash and windscreen wipe/wash, are as used on the standard Elise.

Auxiliary Power Sockets

Two auxiliary power sockets are provided at the rear of the cockpit centre divide, to accommodate heated (motorcycle type) clothing, or similar equipment. The sockets are fitted with protective blanking plugs, and are powered only when the engine is running at over 2,000 rpm, at which time a maximum current of 15 amps may be drawn from each socket.

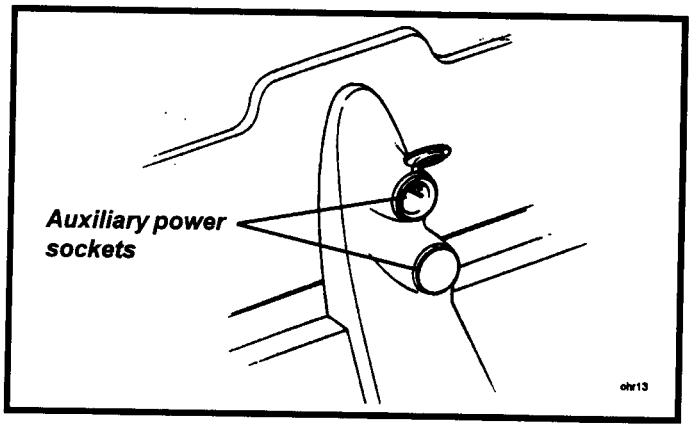

Inertia Switch

The fuel pump cut off safety inertia switch is fixed to the chassis at the left hand side of the engine bay.

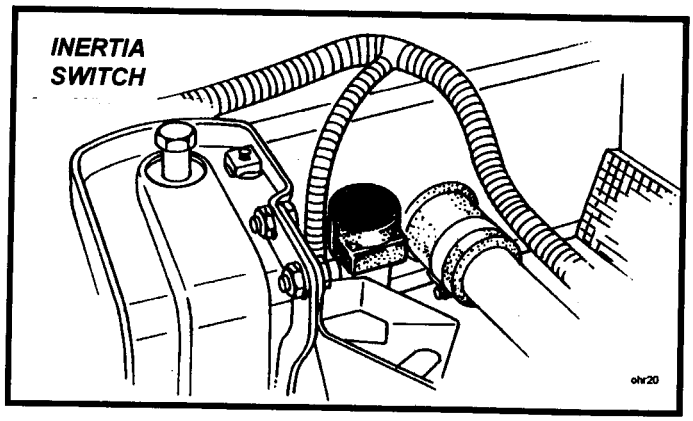

Fuses & Relays

The main fusebox is located in the passenger footwell. and is protected by a clear plastic cover. Twenty two slots are provided for 'Littel' type fuses, which are numbered and coloured according to their amperage rating, and may be pulled out from their slots using a fuse extractor tool.

A relay block adjacent to the fusebox houses eight relays, with a further two relays located nearby.

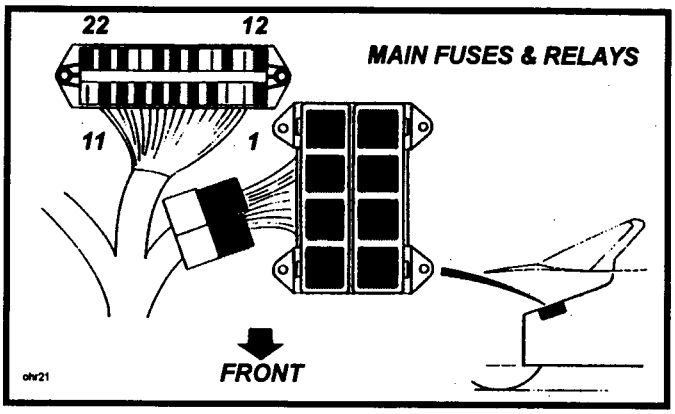

Fuses

Slot	*Rating*	*Circuit*	*Slot*	*Rating*	*Circuit*
1	3A	Rear fog lamp	12	25A	Cooling fan
2	3A	Alarm	13	-	
3	7.5A	Brake lights	14	30A	Aux. sockets
4	15A	Wiper motor	15	-	
5	3A	Reverse lamp	16	5A	Sidelamp LH
6	7.5A	Direction ind.	17	5A	Sidelamp RH
7	10A	Ignition services	18	25A	Heated screen
8	7.5A	Horn, alarm, instruments	19	-	
			20	7.5A	Dip LH
9	10A	Hazard lamps	21	7.5A	Dip RH
10	7.5A	Horn	22	15A	Main beam
11	-				

Relays

A	Main beam	E	Rad. fan	J	Wipe/wash
B	Sidelamps	F	Rear fog	K	Hazard flash
C	Dip beam	G	Horn		
D	Heated screen	H	Auxiliary		

Engine management fuses, relays and diagnostic connector plug, are mounted on the cabin rear bulkhead protected by an access panel retained by threaded fasteners.

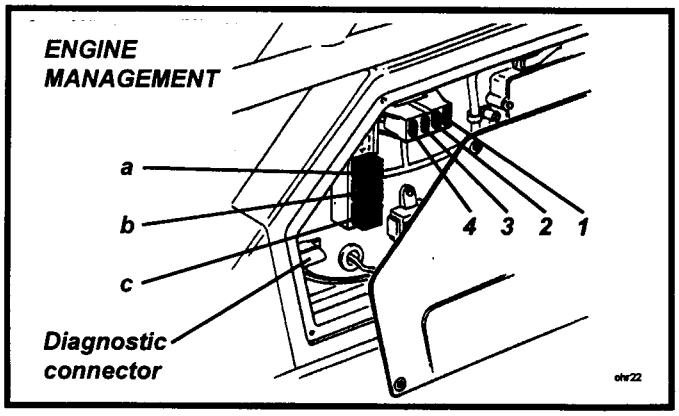

Fuses

Slot	*Rating*	*Circuit*
1	20A	Fuel pump, injectors
2	3A	Engine management, OBD2
3	7.5A	Engine management, canister purge, idle control
4	7.5A	Ignition coil

Relays

a	Engine management ignition supply
b	Starter solenoid
c	Fuel pump, injectors

The main alarm system fuse is located in an individual fuse holder near the battery.

Headlamp Cluster Bulb Replacement

Each headlamp cluster contains a centrally mounted dip beam headlamp/side marker lamp unit, a top mounted turn indicator lamp, and an unlit lens at the bottom corner. For access to the headlamp cluster bulbs, an access panel is provided in the topshell above the front suspension, secured by three socket head fasteners.

Dip Beam Bulb: Remove the protective cover from the back of the lamp and pull off the spade connector from the bulb. Unhook the two arms of the spring clip and withdraw the bulb.

Note: Do not touch the halogen bulb glass envelope with the fingers, as the greasy deposit left behind will greatly reduce bulb life. Use a paper tissue to handle the bulb. Fit the new bulb into the lamp with the indexing feature defining the orientation, and retain with the spring clip. Connect the blue and yellow cable to the bulb terminal, refit the protective cover and retain the cover with the wire spring.

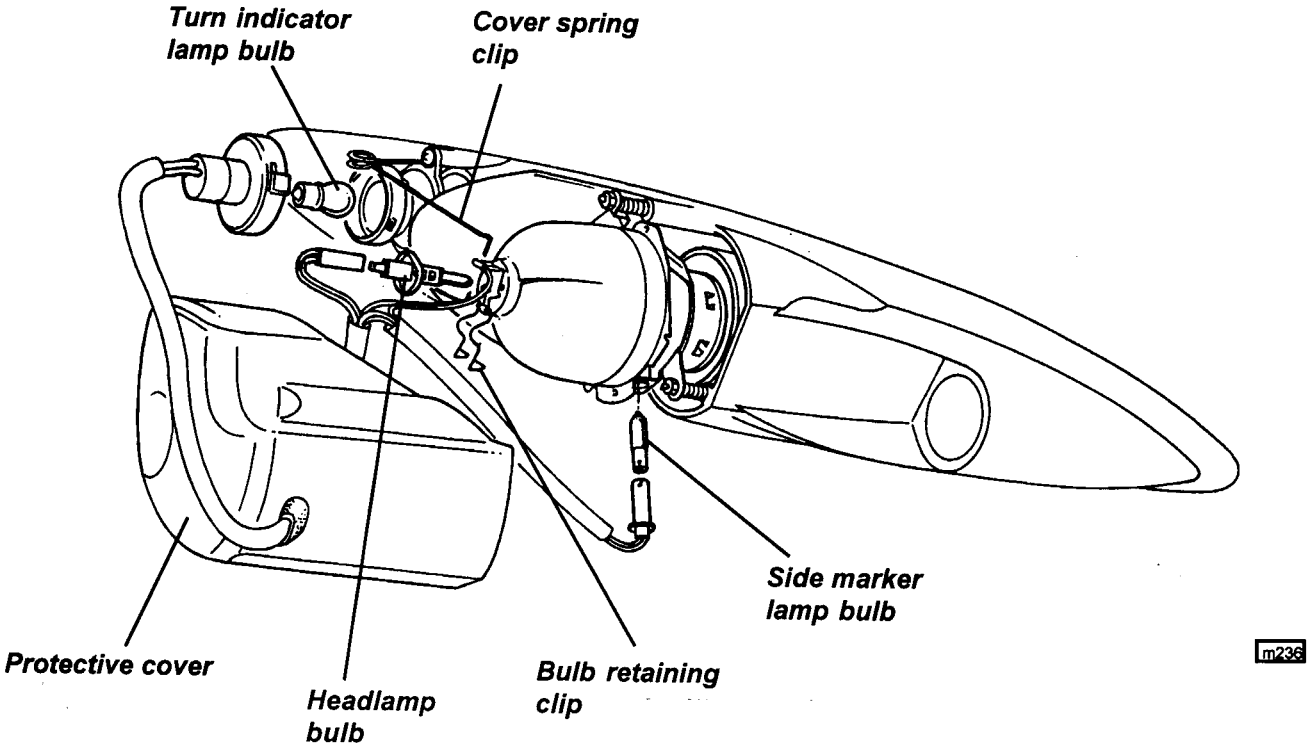

Note that the protective cover must also be removed for access to the headlamp alignment adjusters.

Side Marker Lamp Bulb: Remove the protective cover from the back of the headlamp, and pull the bulb holder downwards and out from its housing. Remove the bayonet bulb from its holder.

Turn Indicator: Twist the bulb holder counterclockwise and withdraw from the lamp body. Replace the bayonet fitting bulb in the holder, and twist the holder back into the lamp with the 'TOP' mark uppermost.

Battery Charger

For easy connection of a battery management charger (U.K. A340M6012F; Europe A340M6015F), a jack plug socket is provided ahead of the gear lever.

Battery Removal

Note that the body topshell must be removed to allow the battery to be withdrawn.

340R CIRCUIT DIAGRAM INDEX

Circuit	Sheet
Starter, Alternator, Ignition	1
Fuel Pump, Ignition Coil	2
Radiator Fan, ECM Control	3
ECM Power Supply, Sensors	4
Wiper Motor	5
Turn Indicators, Hazard Lamps	6
Heated Front Screen	7
Instrument Controller	8
Meta Immobiliser	9
Meta Alarm	10
Headlamps	11
Sidelights	12
Auxiliary Power Sockets	13
Horn	14
Rear Fog, Reverse, Brake Lamps	15

GLOSSARY OF TERMS

Abbreviation	Expansion	Location
IMHC	IMmobiliser Harness Connector	Rear electrical box
BULK	48-way circular connector	Rear electrical box
FTHC	Fuel Tank Harness Connector	Below auxiliary sockets
FTU	Fuel Tank Unit connector	Top of tank, left side
CCC	Centre Console Connector	Behind switch panel
AHC	Alarm Harness Connector	Behind battery
OP CONN	OPtion CONNector	Rear electrical box
FHC	Front Harness Connector 1 & 2	Front compartment, right side
CHMSL HC	Central High Mounted Stop Lamp Harn. Conn.	Engine bay, left side
INSTR CON	INSTRument CONtroller harness connector	Under dash, left side
FOG HC	FOG lamp Harness Connector	Inside lower spoiler
LHC	Lighting Harness Connector	Engine bay, right side
HDL HC	HeaDLamp Harness Connector	Behind light pod

340R START/ALTERNATOR/IGNITION

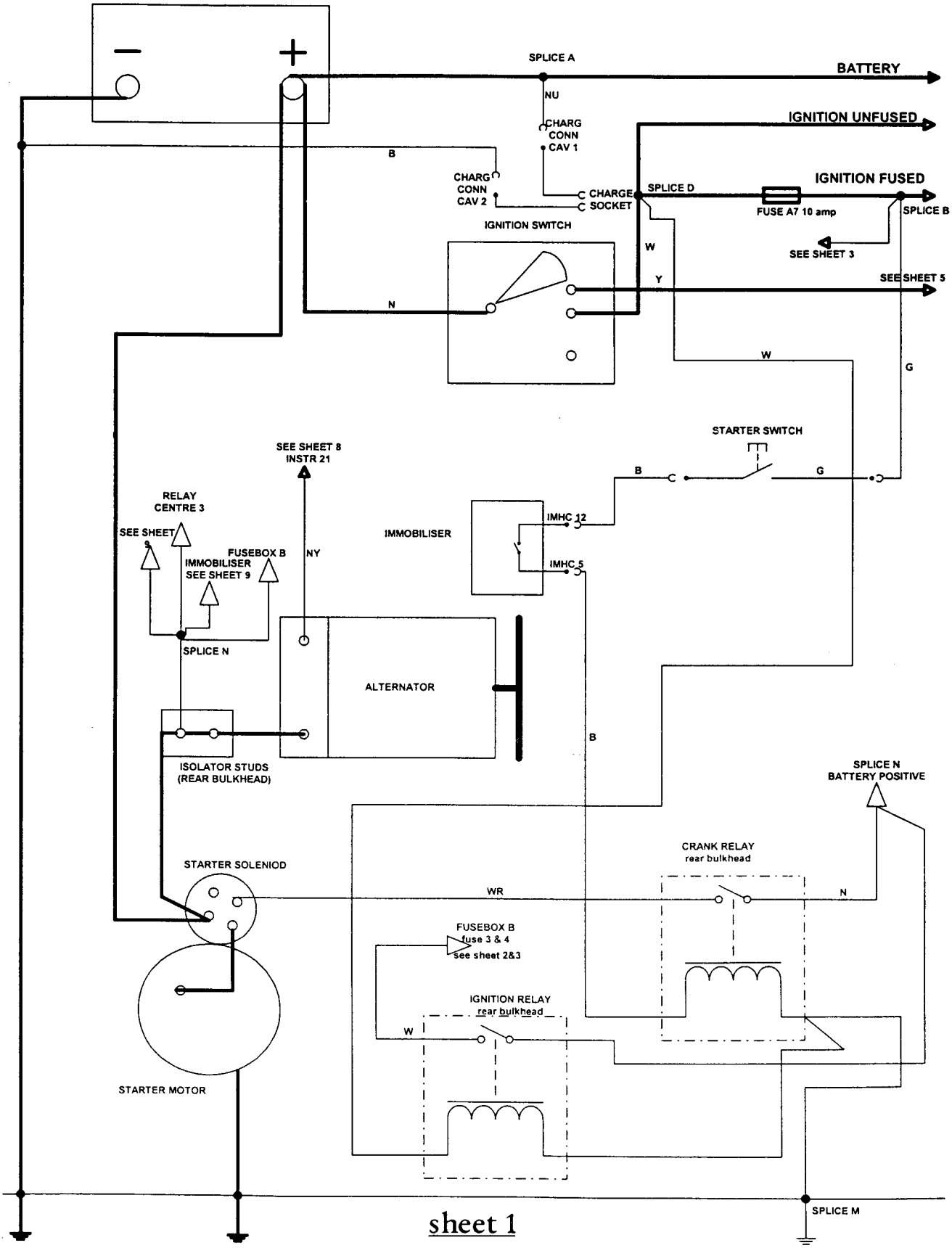

sheet 1

340R FUEL PUMP PLAN & CODE

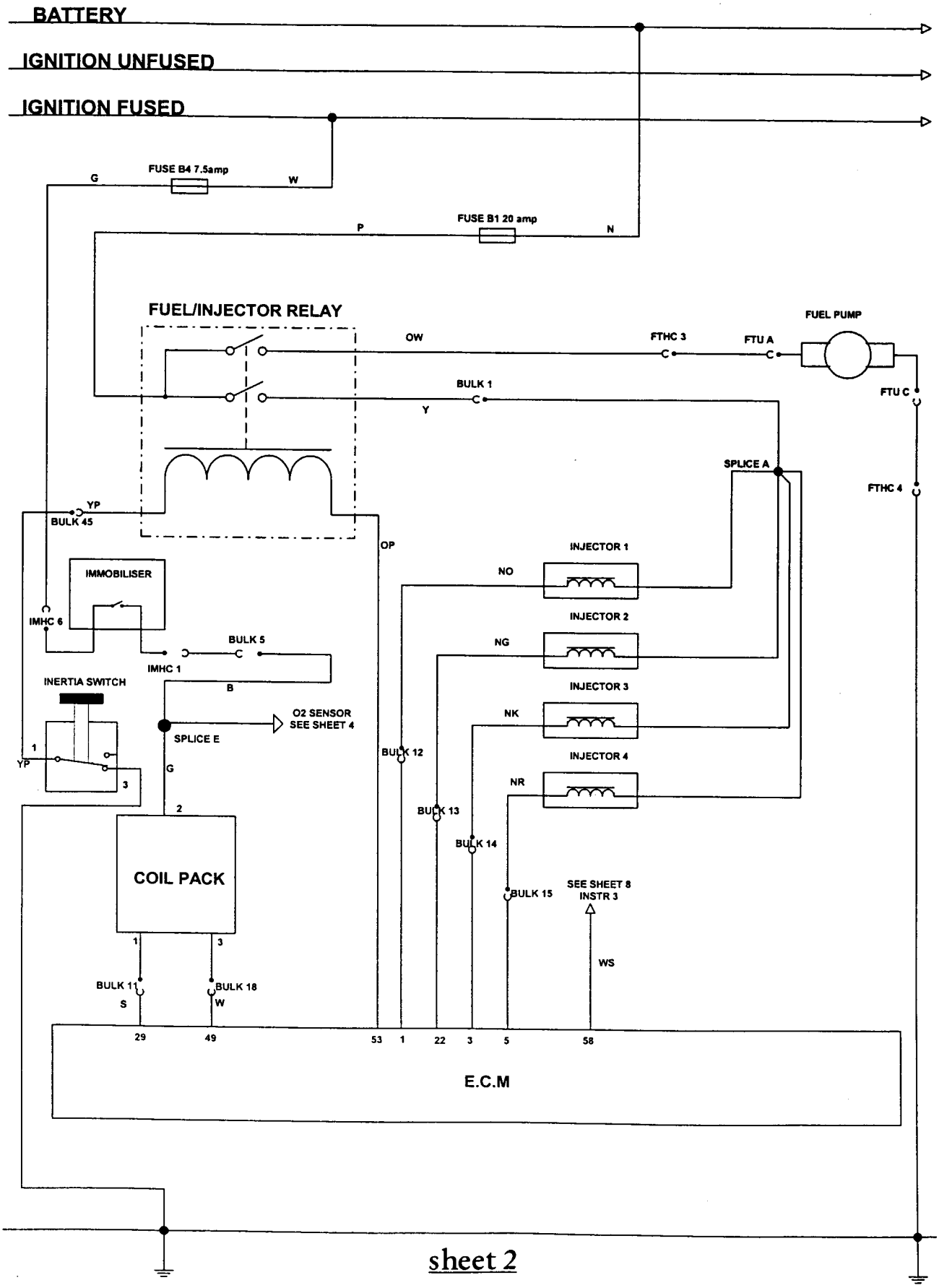

sheet 2

340R COOLING FAN + ECM CONTROL

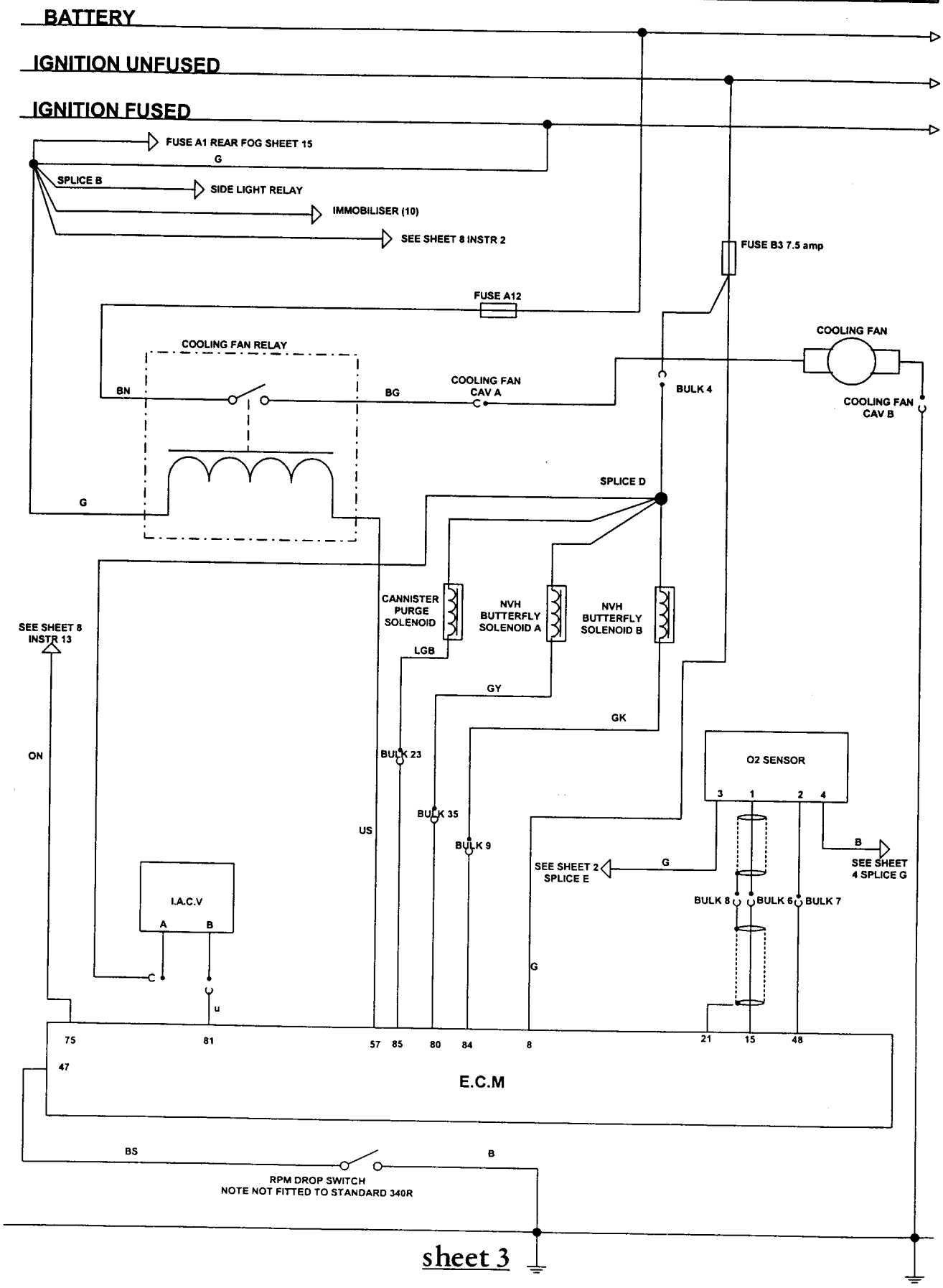

sheet 3

340R ECM SENSORS + POWER

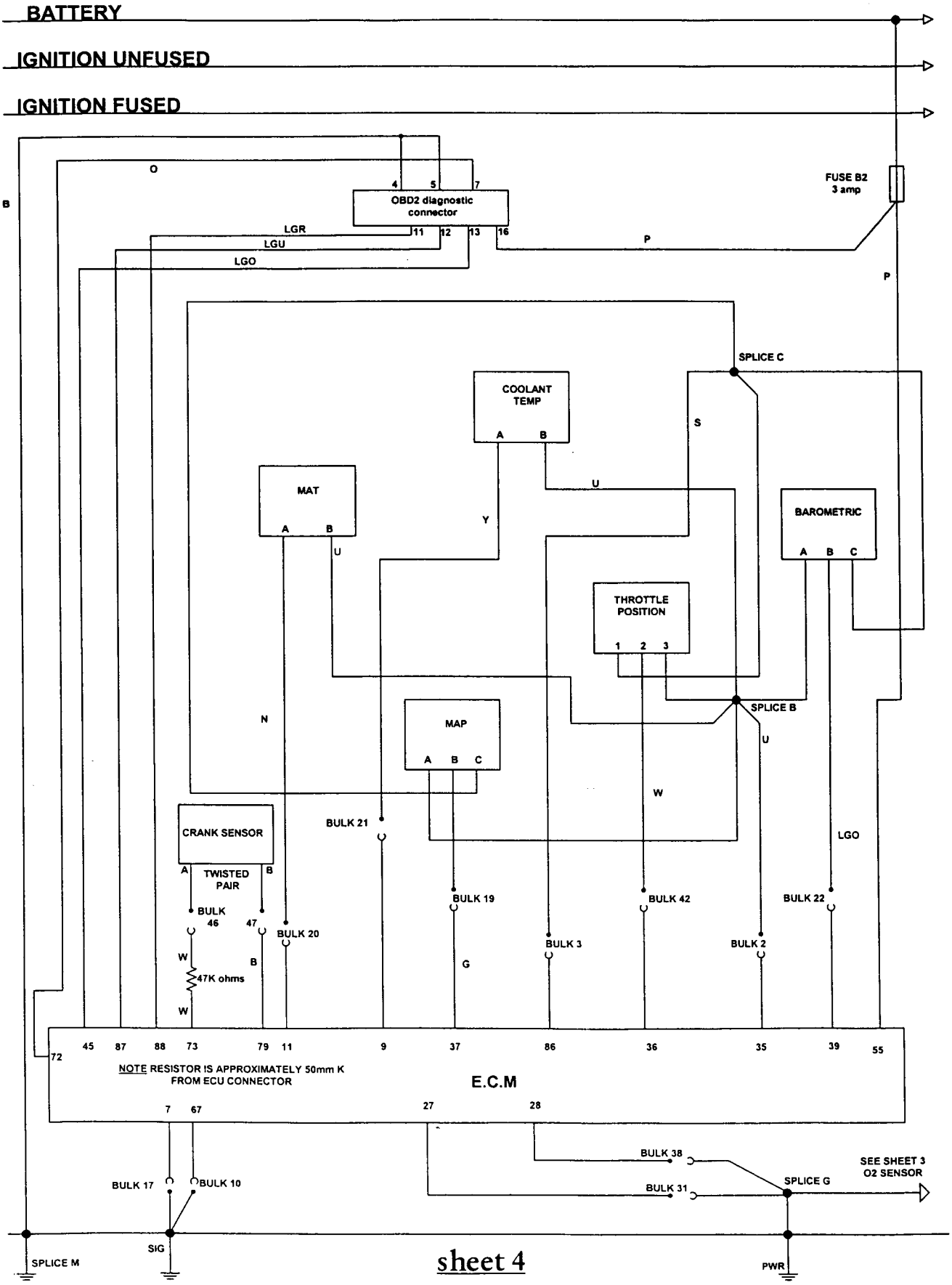

340R WIPER MOTOR

BATTERY

IGNITION UNFUSED

IGNITION FUSED

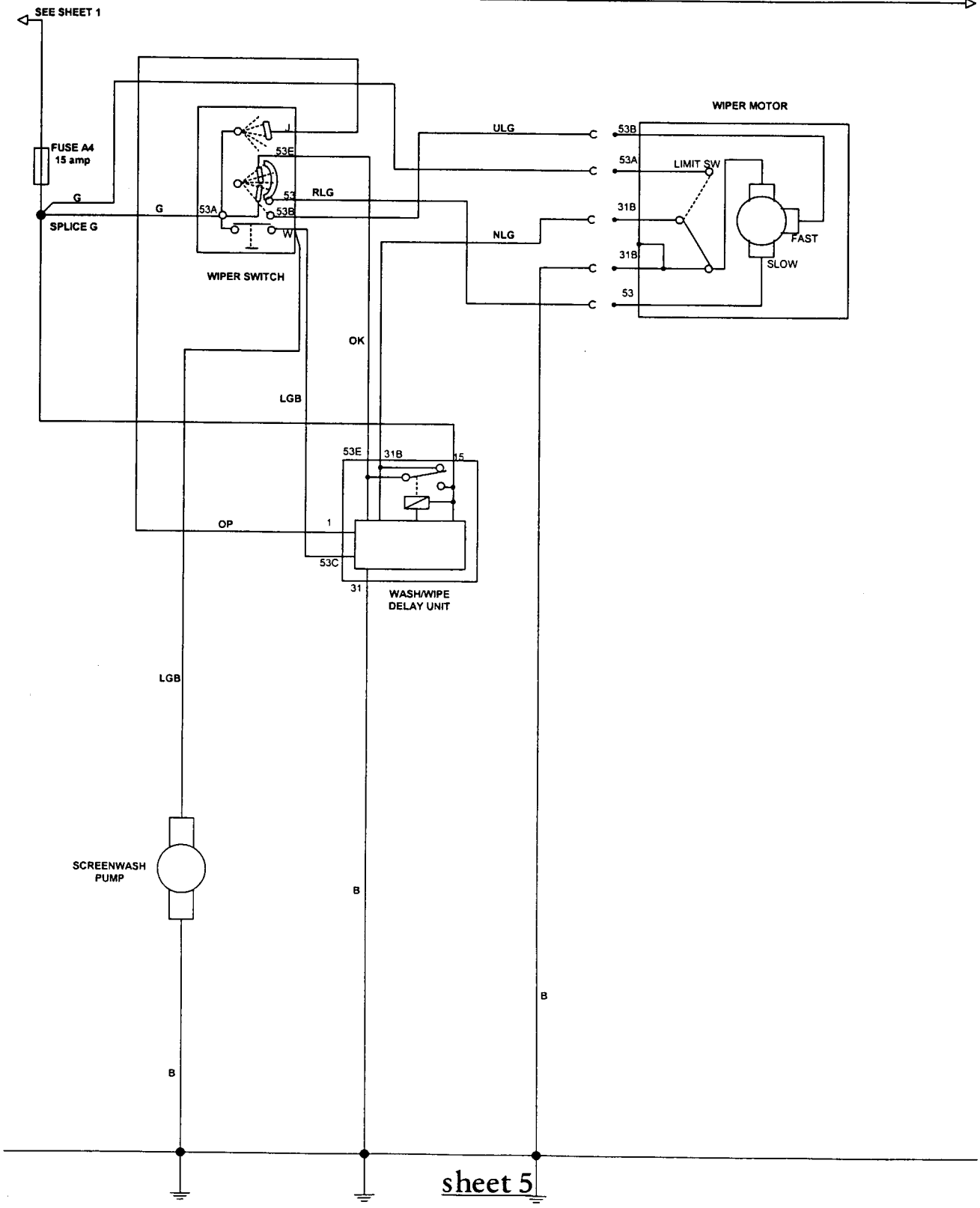

sheet 5

340R INDICATOR/HAZARD LAMPS

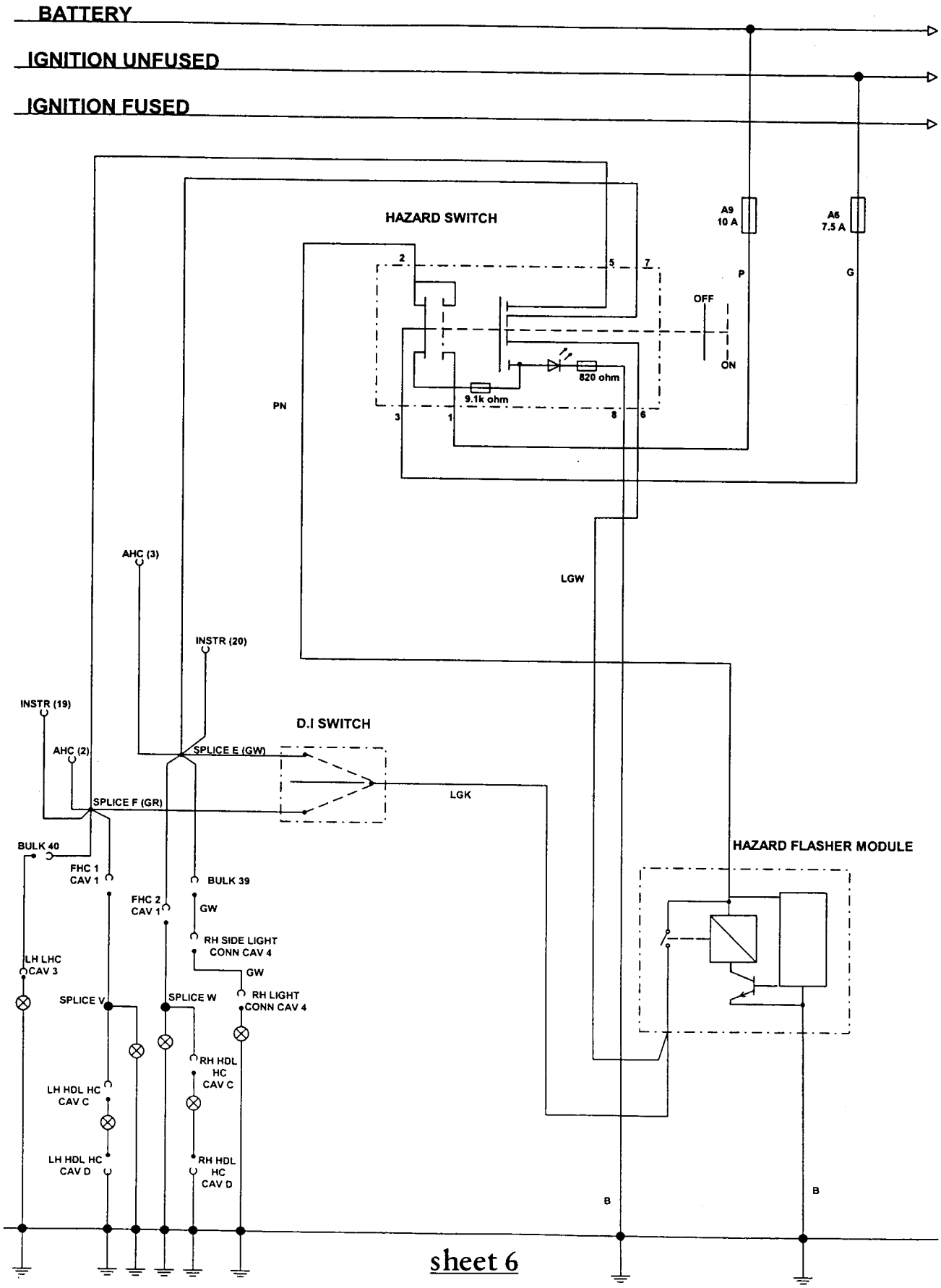

340R HEATED FRONT SCREEN

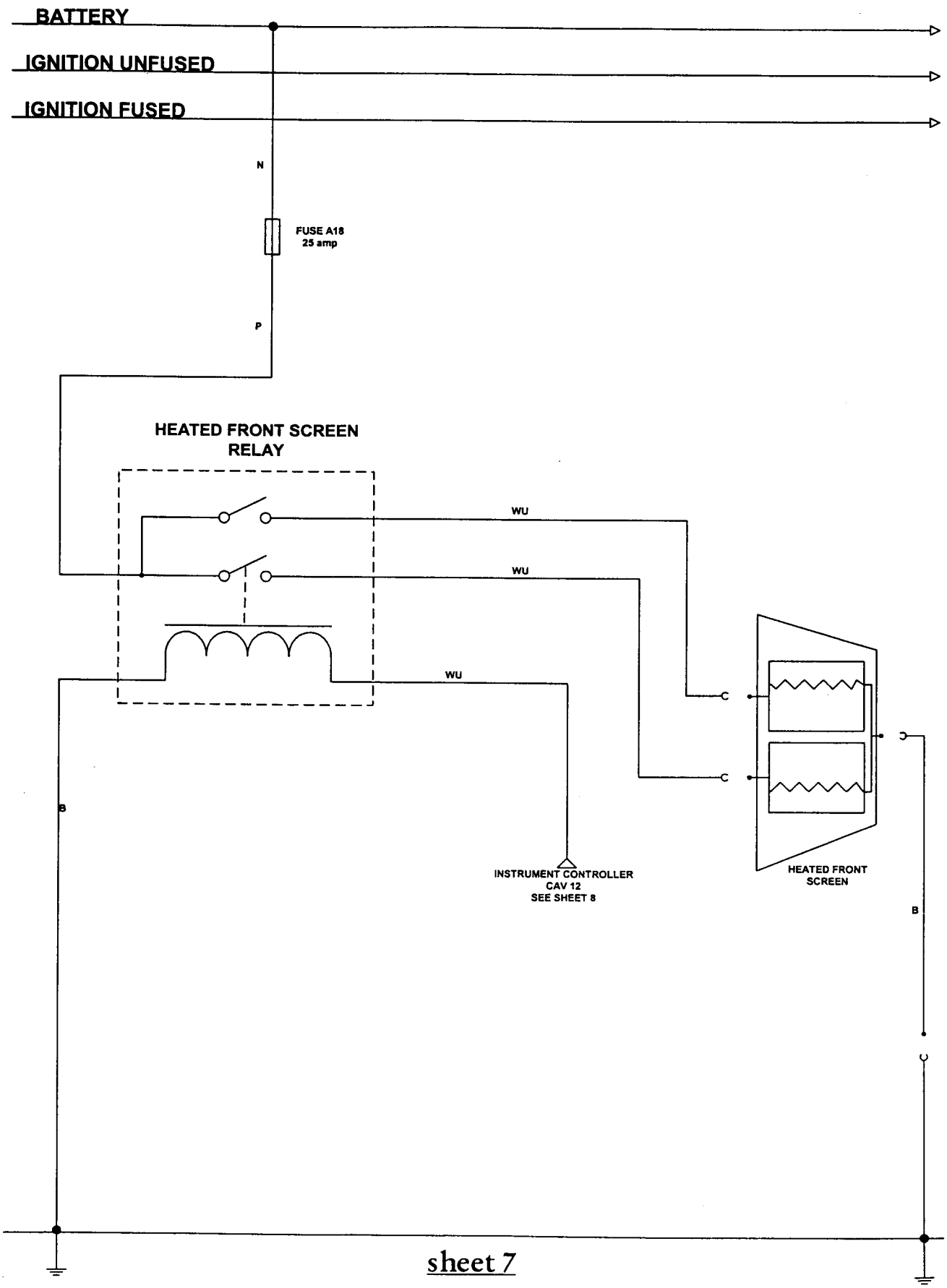

sheet 7

340R INSTRUMENT CONTROLLER

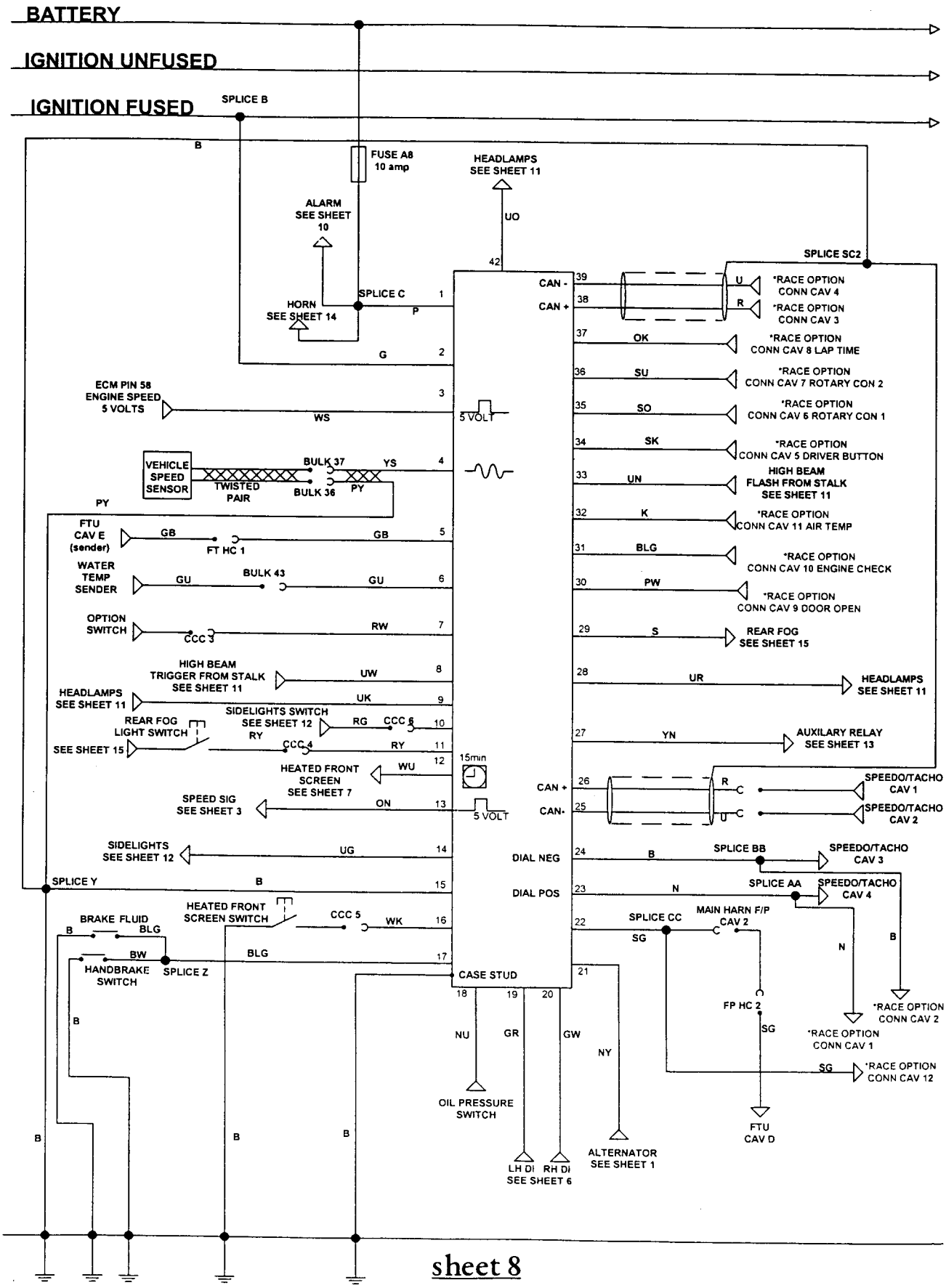

sheet 8

340R IMMOBILISER

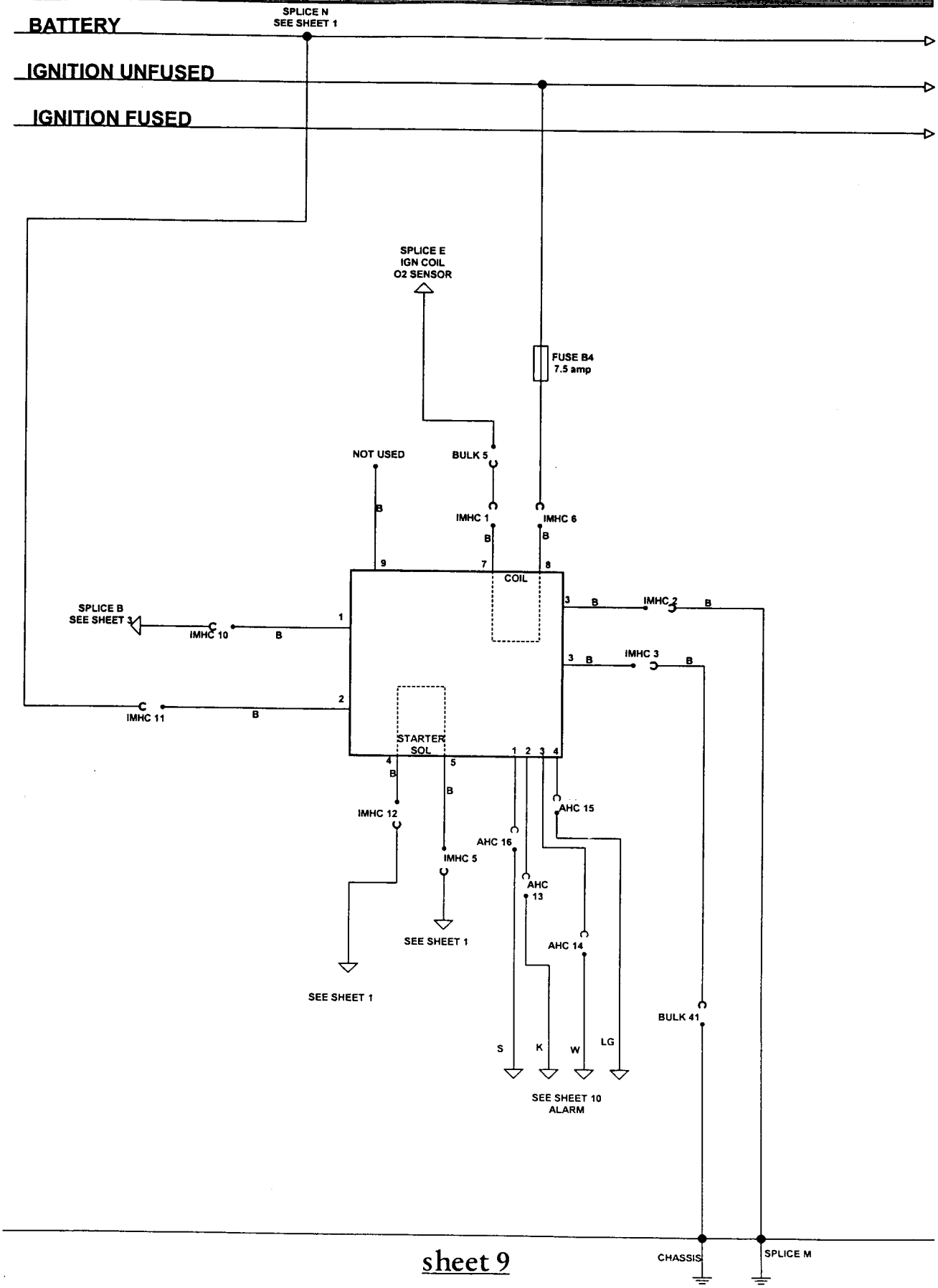

sheet 9

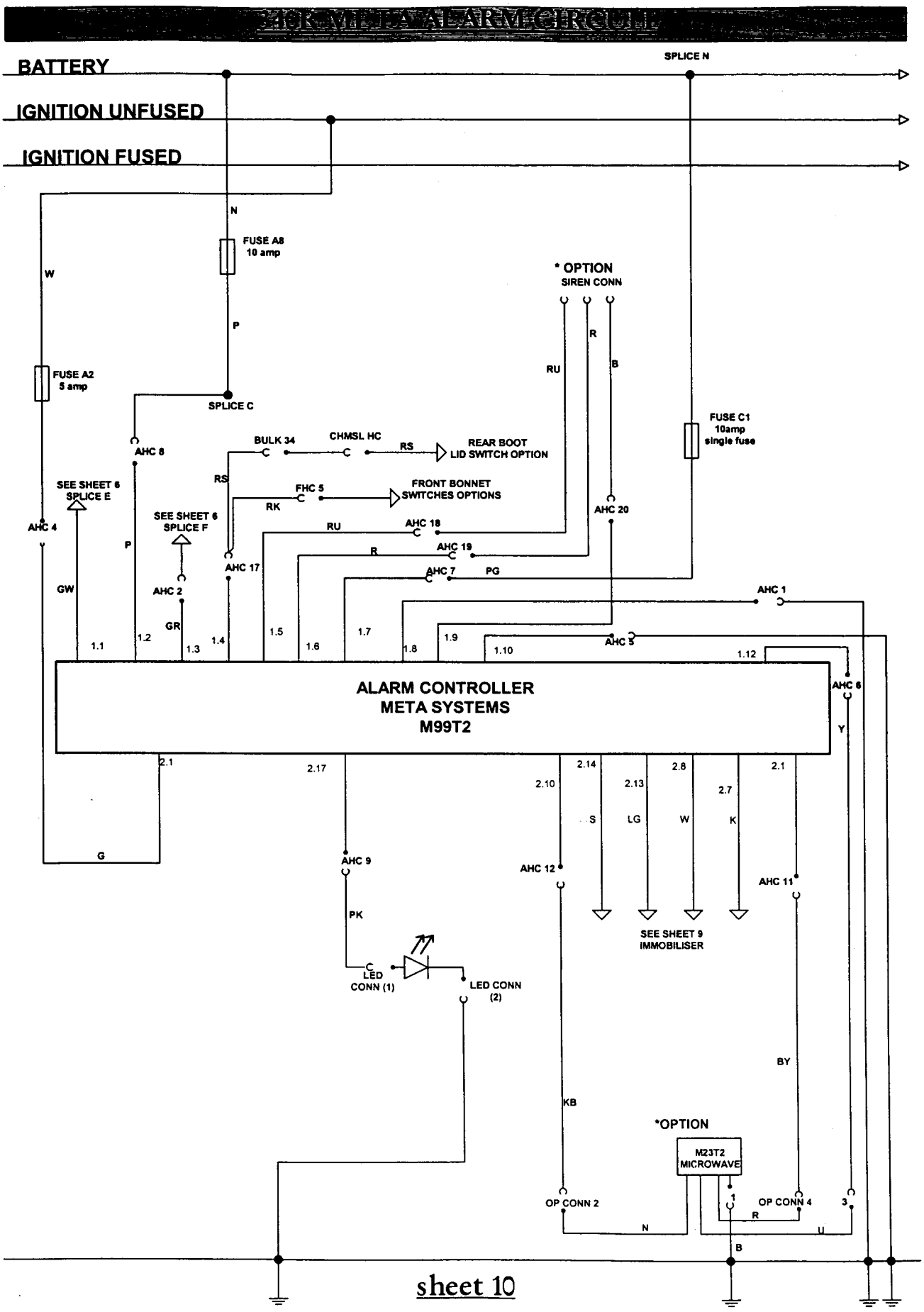
BATTERY
IGNITION UNFUSED
IGNITION FUSED
SPLICE N
N
FUSE A8
10 amp
W
P
FUSE A2
5 amp
SPLICE C
* OPTION
SIREN CONN
R
RU
B
FUSE C1
10amp
single fuse
AHC 8
BULK 34
CHMSL HC
RS
REAR BOOT
LID SWITCH OPTION
SEE SHEET 6
SPLICE E
RS
FHC 5
FRONT BONNET
SWITCHES OPTIONS
RK
AHC 20
AHC 4
SEE SHEET 6
SPLICE F
RU
AHC 18
P
R
AHC 19
AHC 17
AHC 7
PG
GW
AHC 2
AHC 1
GR
1.1
1.2
1.3
1.4
1.5
1.6
1.7
1.8
1.9
1.10
AHC 3
1.12
AHC 6
ALARM CONTROLLER
META SYSTEMS
M99T2
Y
2.1
2.17
2.14
2.10
2.13
2.8
2.7
2.1
S
LG
W
K
G
AHC 9
AHC 12
AHC 11
PK
SEE SHEET 9
IMMOBILISER
LED
CONN (1)
LED CONN
(2)
BY
KB
*OPTION
M23T2
MICROWAVE
OP CONN 2
OP CONN 4
1
3
R
N
U
B

sheet 10

340R HEADLAMP CIRCUIT

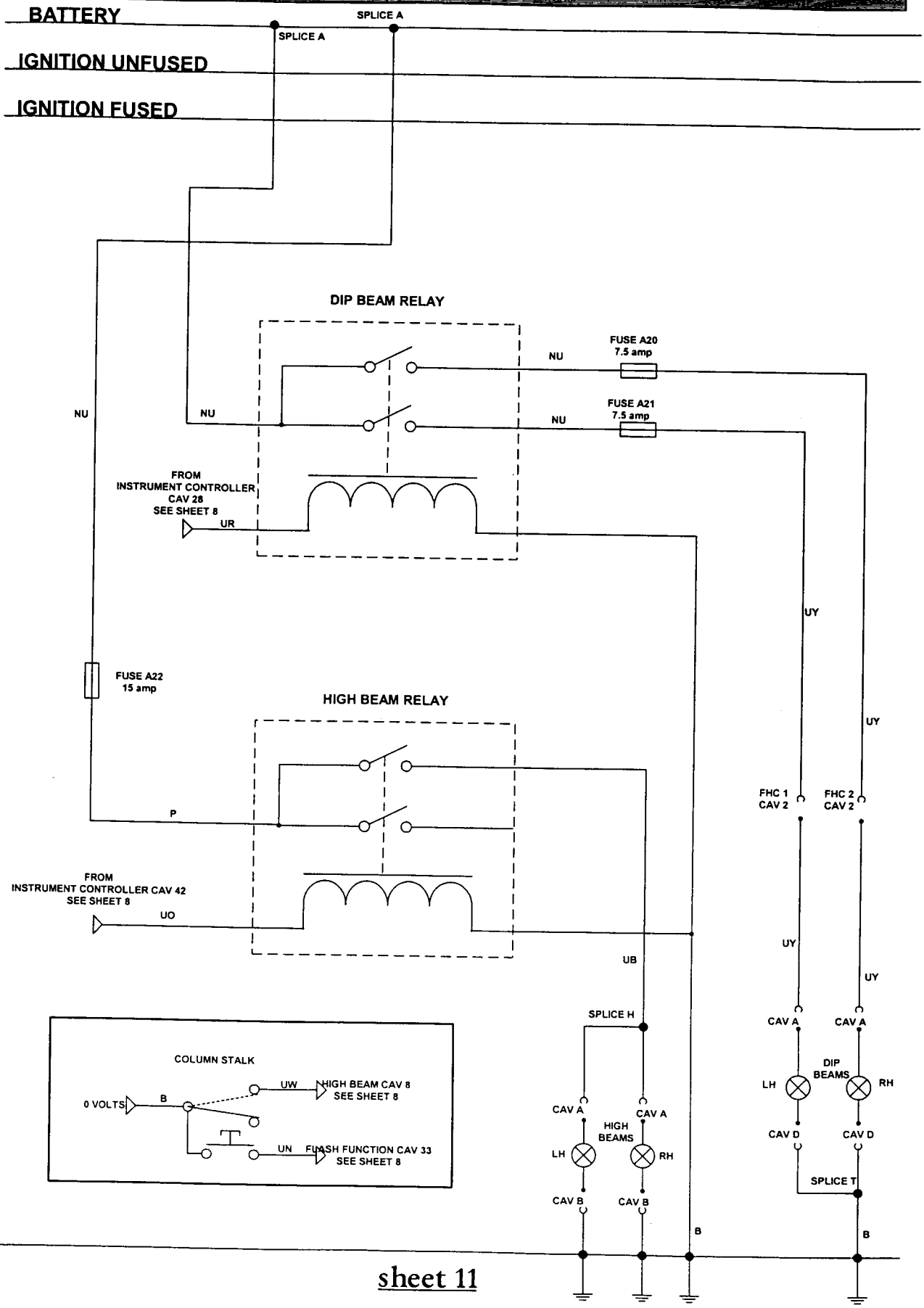

sheet 11

340R SIDELIGHTS

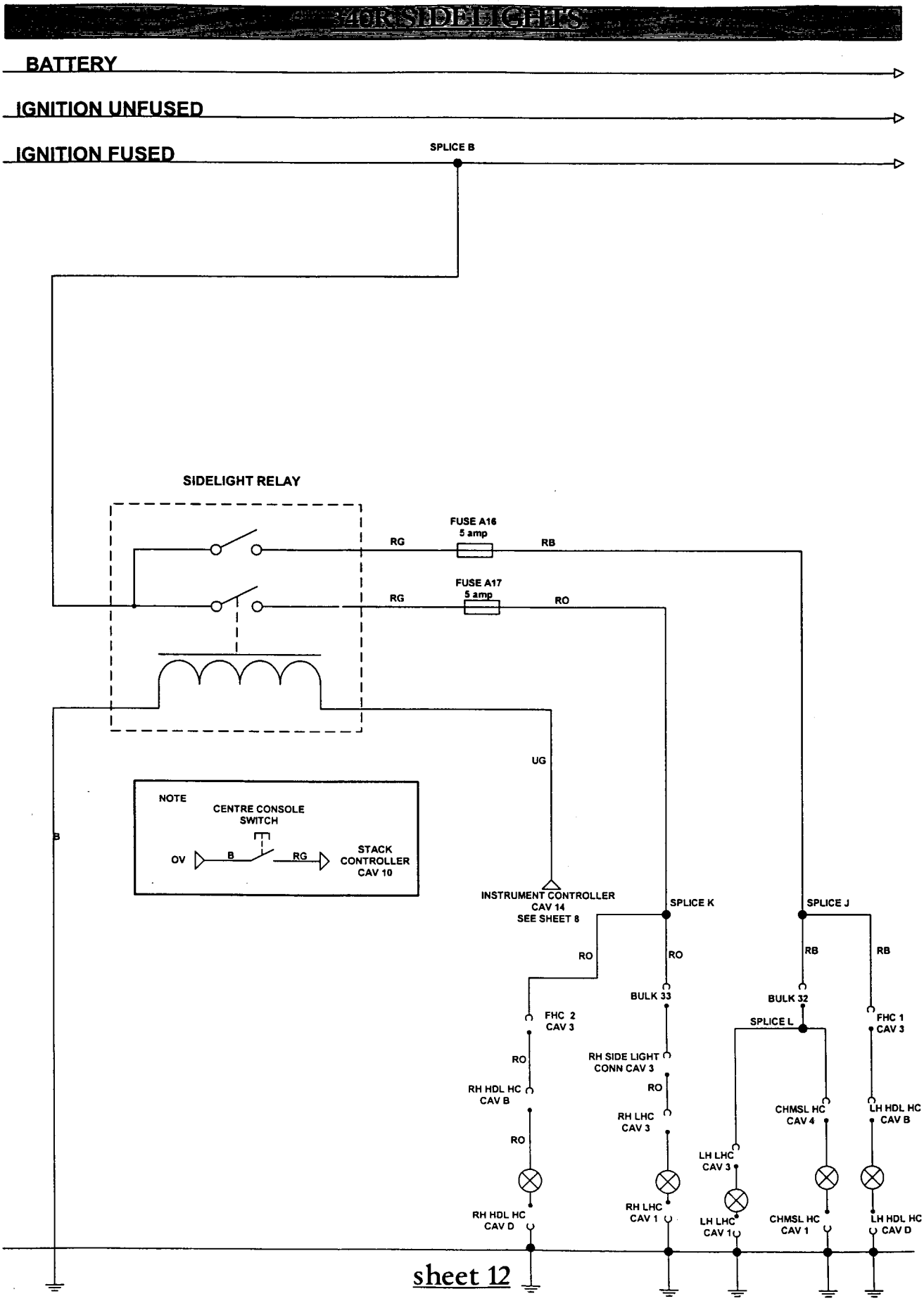

340R AUXILIARY SOCKETS

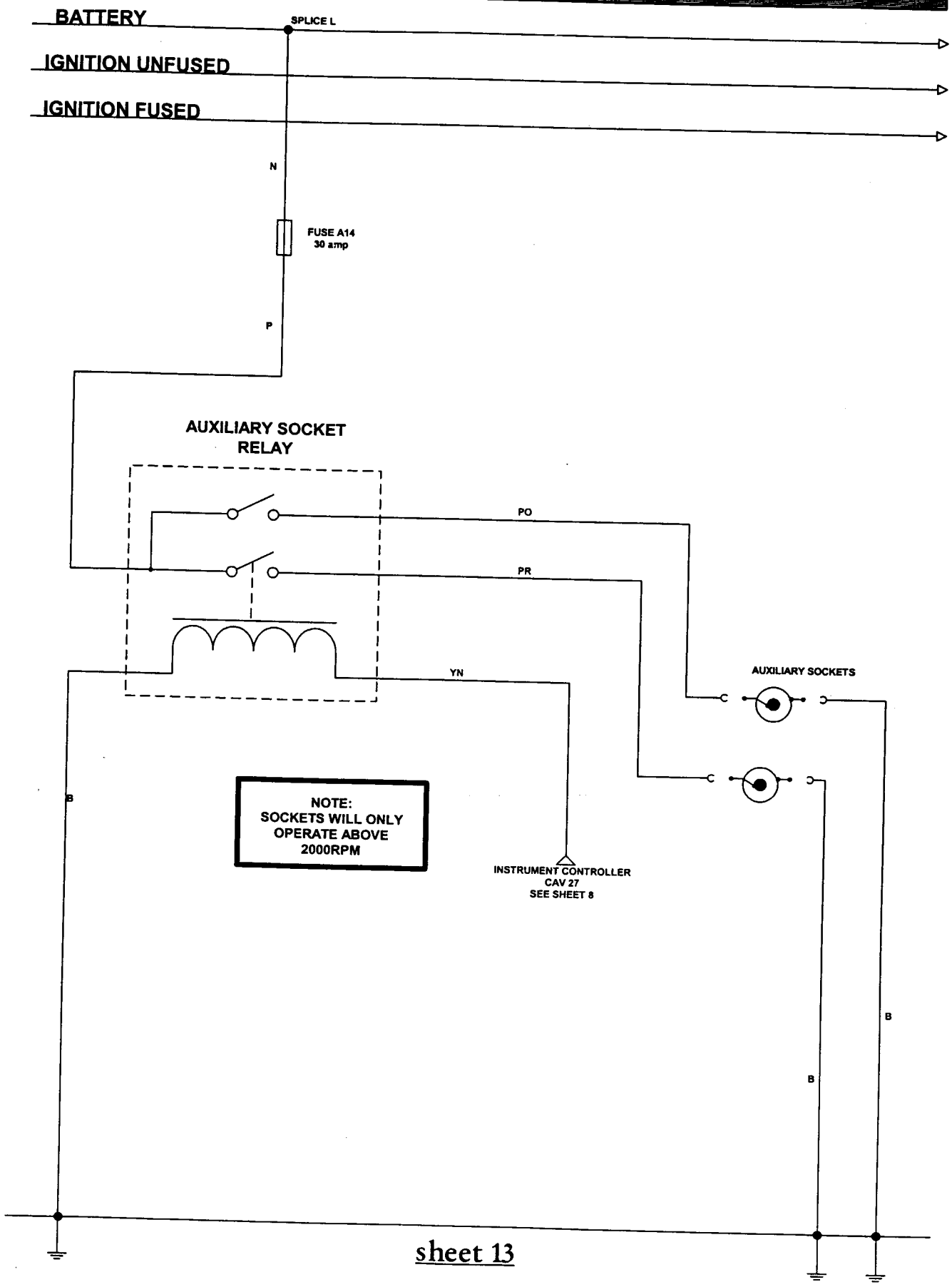

sheet 13

HORN CIRCUIT

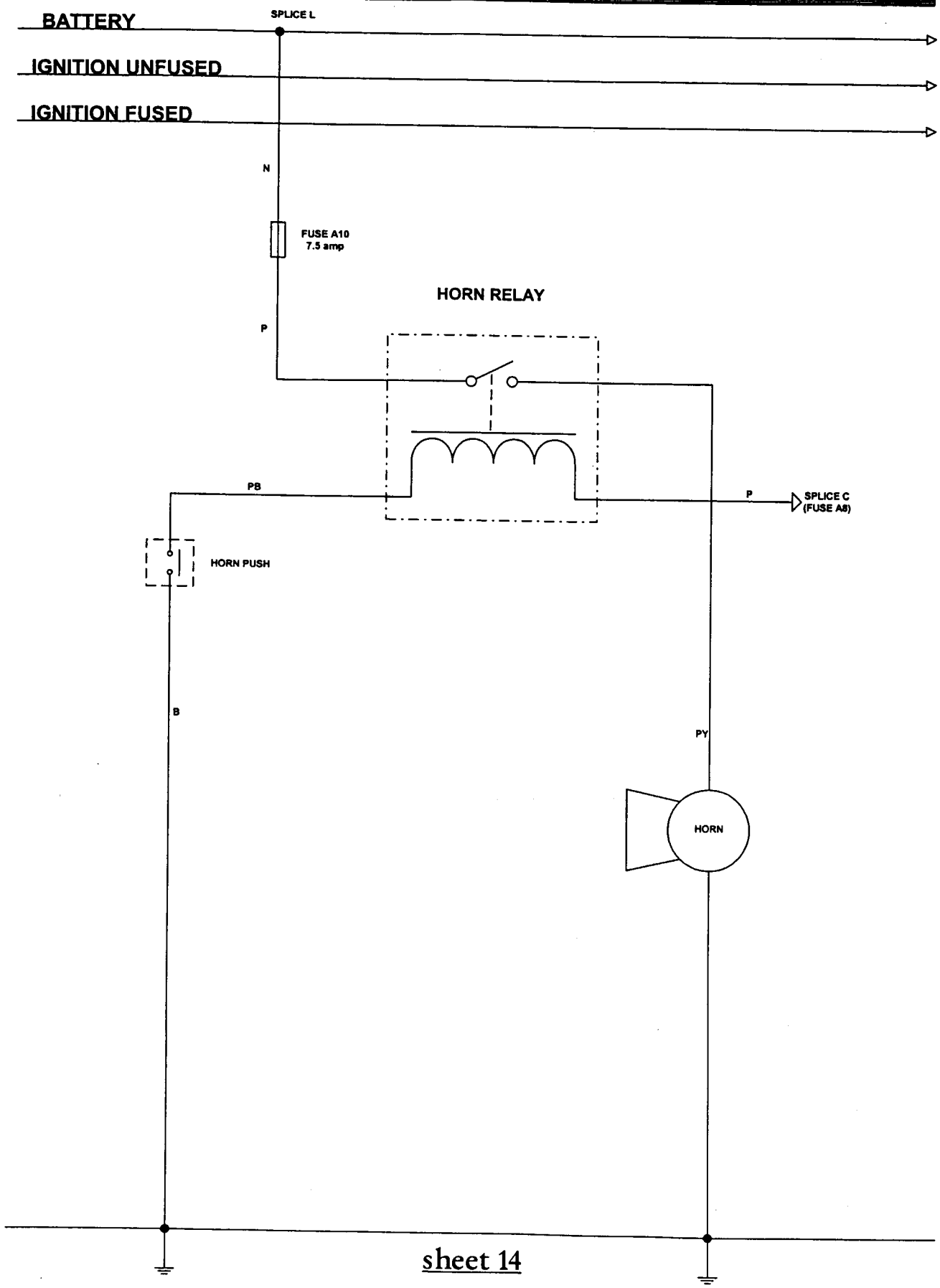

sheet 14

340R REAR FOG/REVERSE AND BRAKE LAMPS

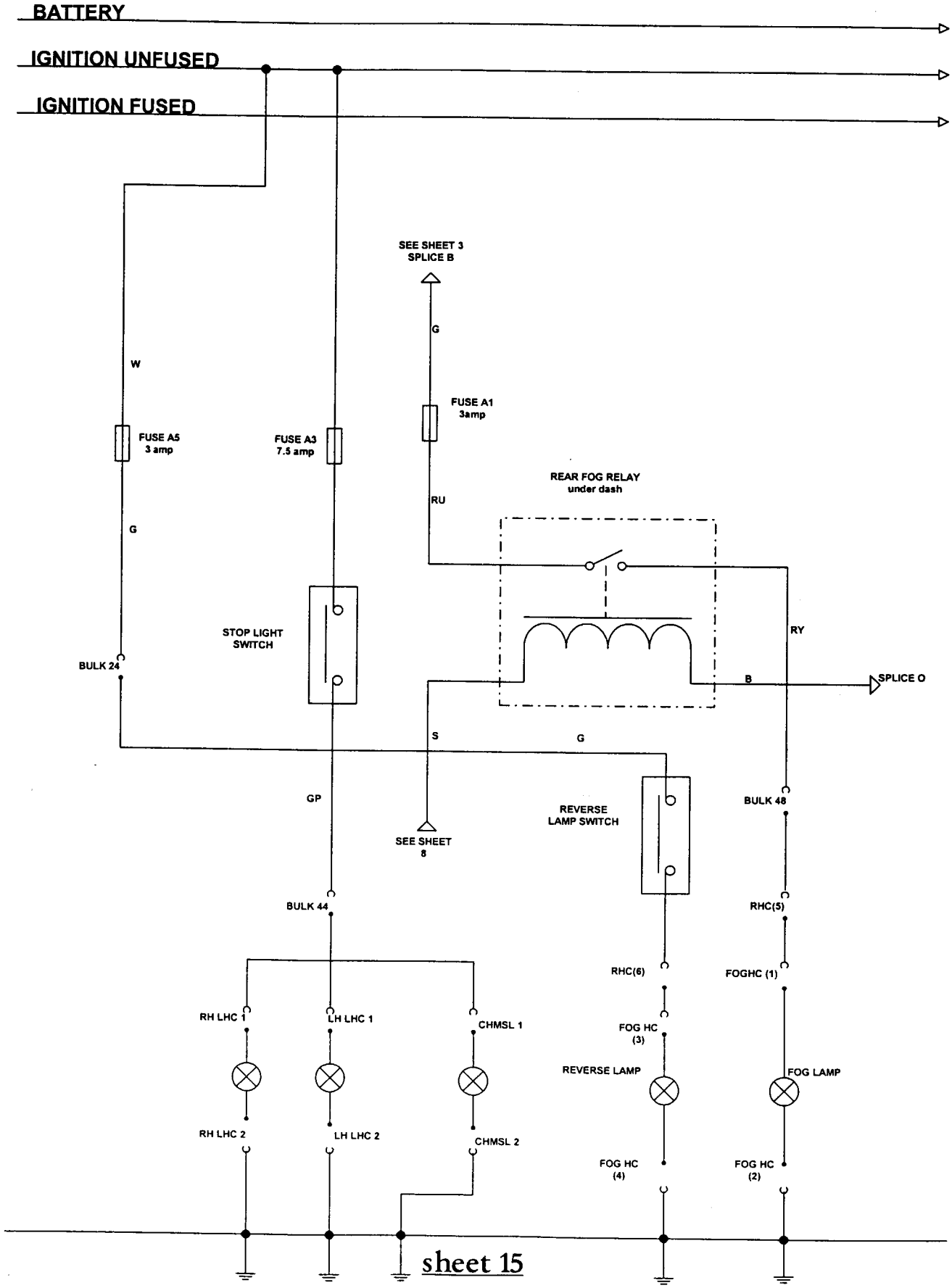

Main harness - dash area

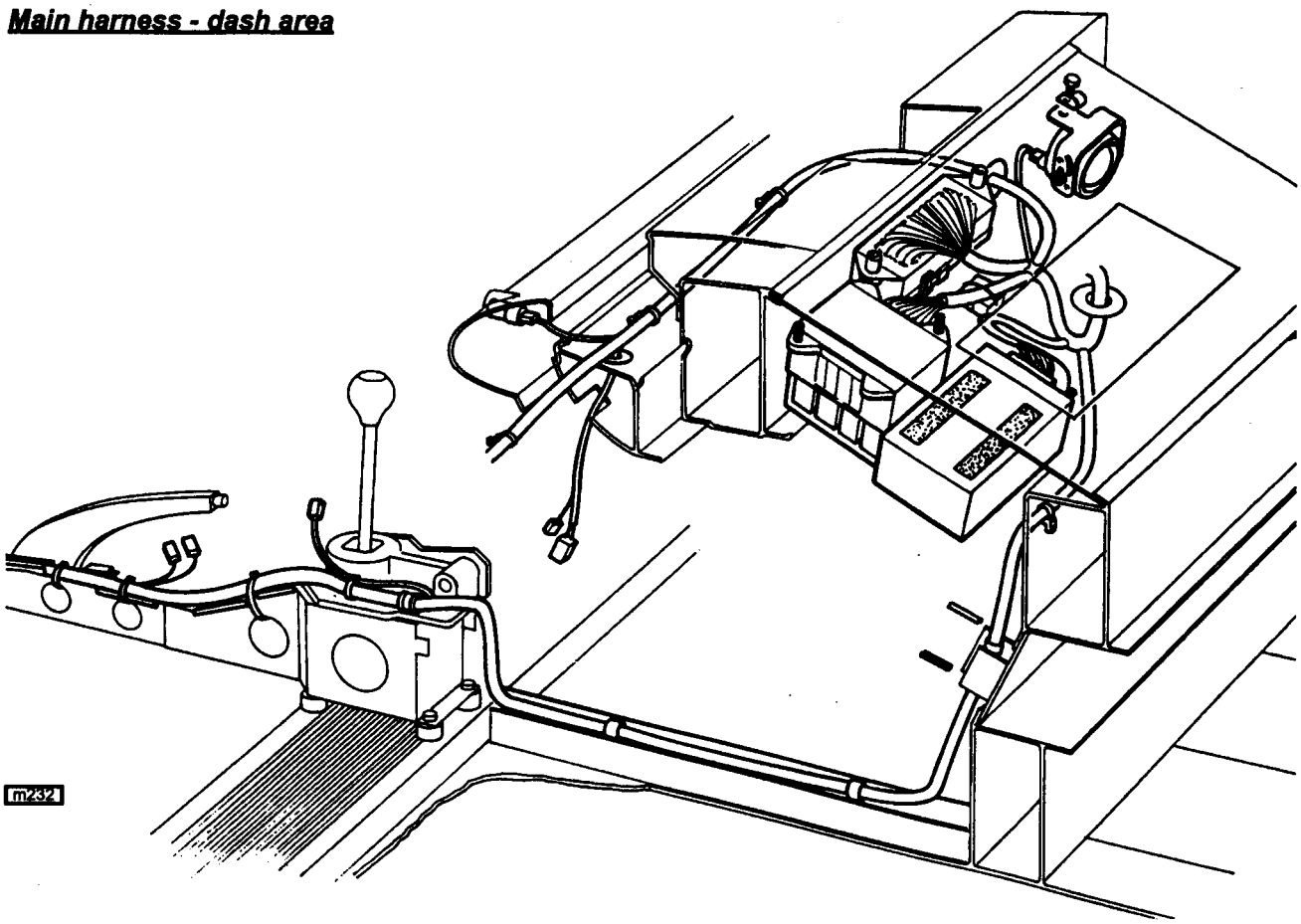

Rear bulkhead - electronics box

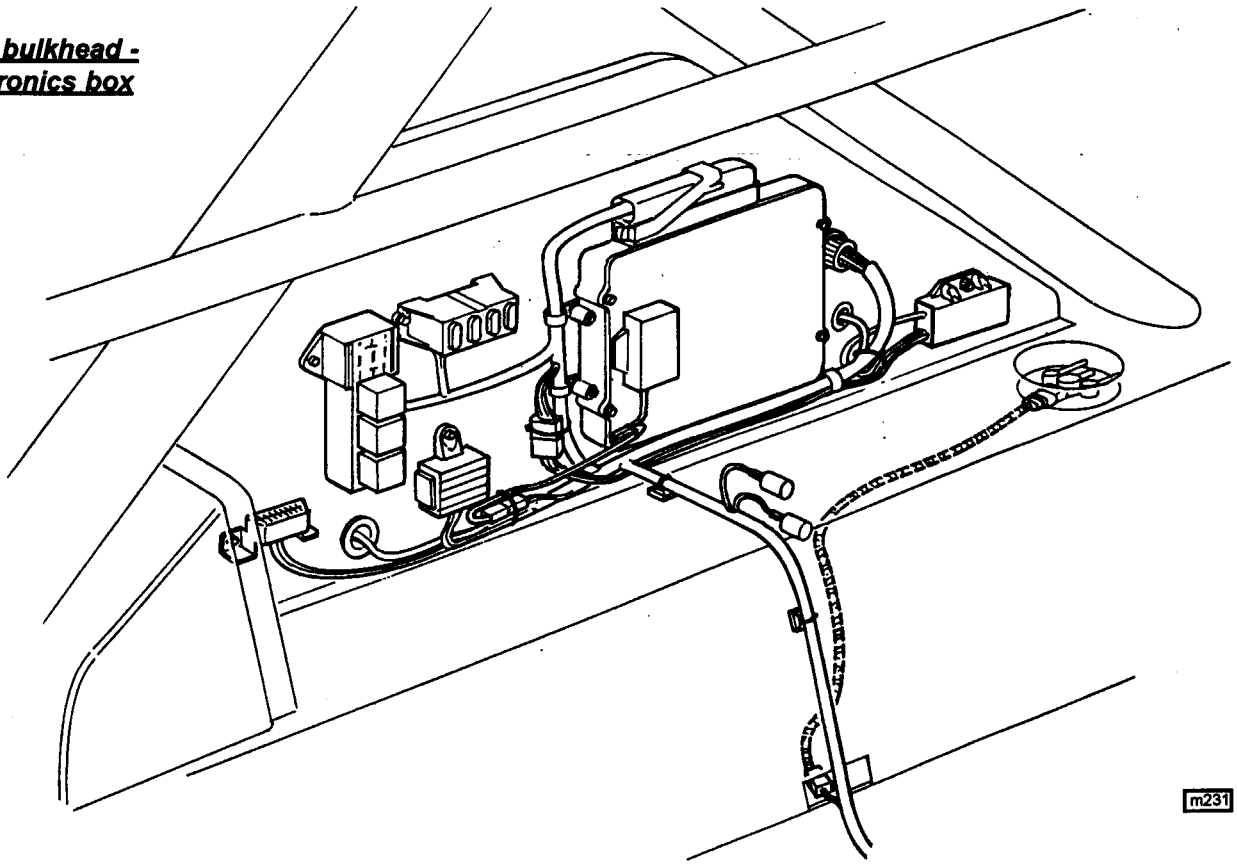

Routing in front body area

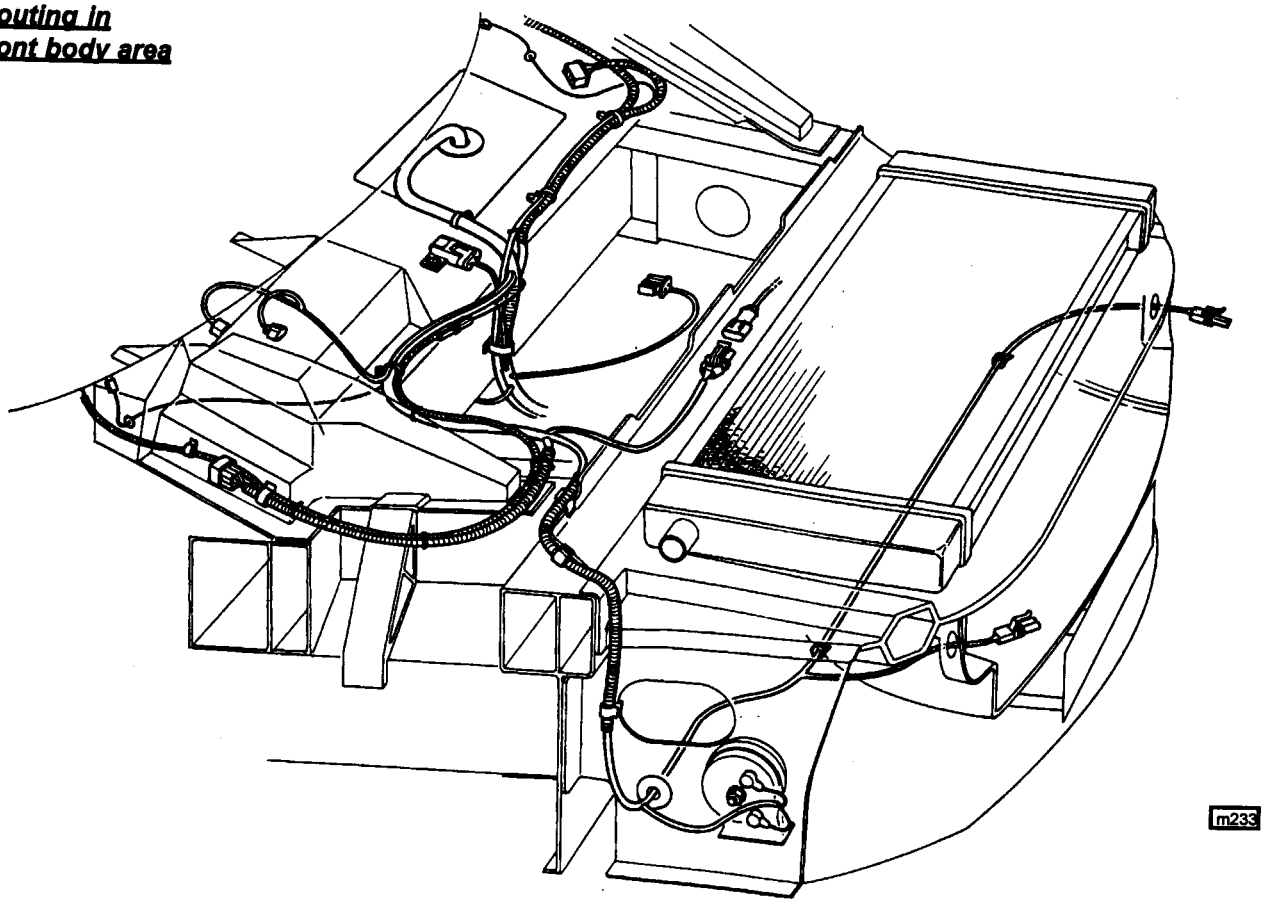

Battery cables & alarm controller

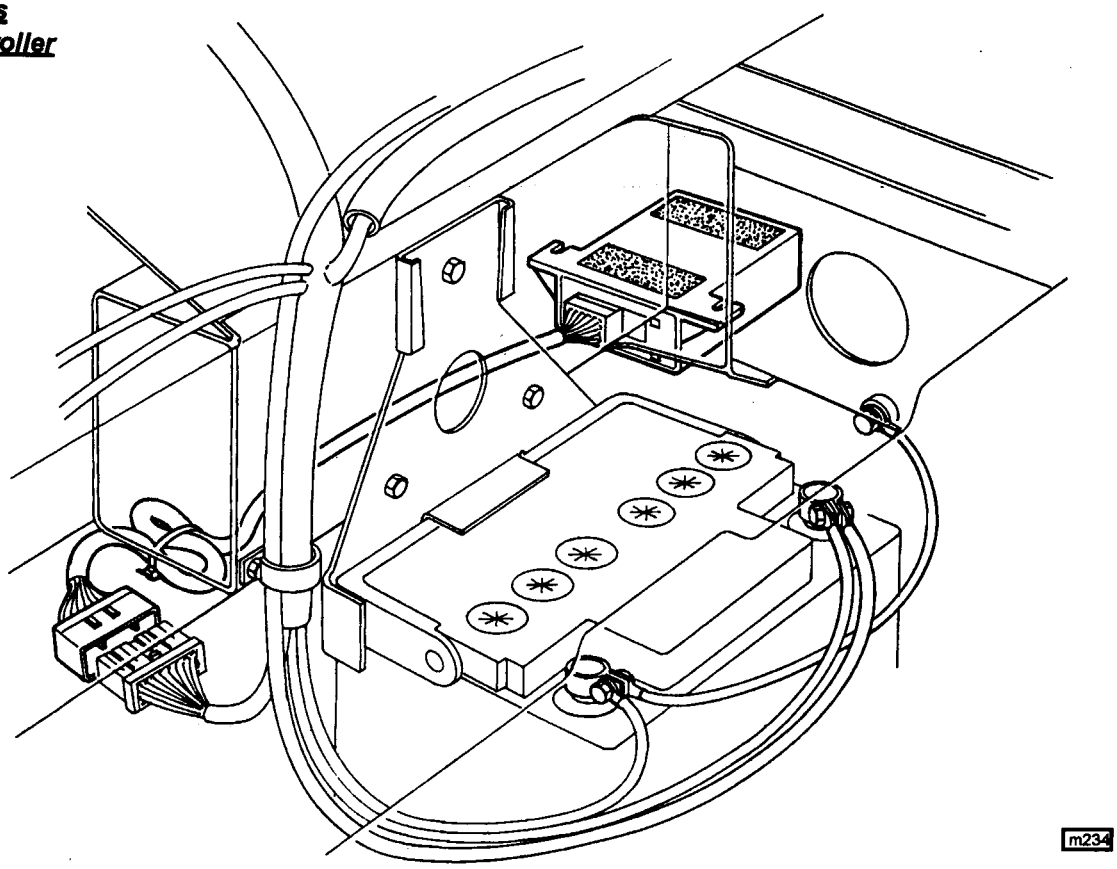

340R.O - MAINTENANCE & LUBRICATION

Lubricants are as for standard Elise. The maintenance schedule is basically the same except the distance interval is reduced from 9,000 miles (15,000 km), to 6,000 miles (10,000 km) to reflect the likely harder use of the vehicle. For normal road use, the engine oil and filter should be changed in accordance with this schedule, but for cars used on race circuits, oil and filter should be changed every 3,000 miles (5,000 km). For seriously raced cars, oil and filter should be changed every 2 meetings.

The engine is factory filled with Castrol GTX 15W/50 to be used for running-in until the After Sales Service. At this service, it is recommended to use a fully synthetic oil for optimum engine protection, with the following two products being specifically recommended; Mobil One 5W/50; Castrol Formula RS 10W/60.

A maintenance schedule for the 340R is available under part number LSL382.

MAINTENANCE SCHEDULE - ELISE 340R

Date: ..... Owner's Name: ..... Vehicle: .....

Vehicle Registration No.: ..... V.I.N.: .....

Recorded Mileage: ..... Months Since Last Service: ..... Job No.: .....

EXPLANATORY NOTES:

Required Maintenance

In order to maintain warranty validation and help ensure proper safety, emissions performance and dependability of the vehicle, Lotus Cars Ltd. requires that the vehicle be serviced in accordance with this schedule. Each service should be performed either within 1,000 miles (1,600 km) of the distances stipulated, or within one month of the anniversary of the previous service, whichever first occurs. Any necessary repairs should be completed without delay. For vehicles frequently used on closed circuit tracks, or driven in competitive conditions, higher levels of servicing will be required.

A cross (X) in the following table indicates an operation to be performed. The corresponding box should be ticked (✓) when the operation has been satisfactorily performed, or the X circled if extra work and time is required. The approval of the customer should be obtained before any extra work is undertaken, details of which should be recorded in the space provided at the end of the schedule.

After Sales Service

There is no charge to the vehicle owner for the labour content of the After Sales Service. Only materials used will be charged.

'Inspect' means assess condition and test for correct operation. Extra time is required to adjust or repair - advise customer beforehand if necessary.

'Check' means test and adjust/fill or tighten as necessary. Labour time is included.

Odometer Reading	***Time Period***	***Service Type***
1,000 to 1,500 miles (1,500 to 2,500 km)	To be performed within 12 months of vehicle date of sale.	After Sales Service.
6,000 miles (10,000 km)	Or 12 months since last service.	A
12,000 miles (20,000 km)	" " " " " "	B
18,000 miles (30,000 km)	" " " " " "	A
24,000 miles (40,000 km)	" " " " " "	B
30,000 miles (50,000 km)	" " " " " "	A
36,000 miles (60,000 km)	" " " " " "	C
42,000 miles (70,000 km)	" " " " " "	A
48,000 miles (80,000 km)	" " " " " "	B
54,000 miles (90,000 km)	" " " " " "	A
60,000 miles (100,000 km)	" " " " " "	B
66,000 miles (110,000 km)	" " " " " "	A
72,000 miles (120,000 km)	" " " " " "	C

Op No.	OPERATION DESCRIPTION	SERVICE TYPE				
		After Sales	A	B	C	Other Intervals
1	Fit protective covers to seats, footwells, steering wheel & rear body	X	X	X	X	
	Lubrication					
2	Renew engine oil & filter*	X	X	X	X	
3	Inspect engine & transmission for oil leaks	X	X	X	X	
4	Check transmission oil level		X	X	X	
	* In 'severe service' conditions (dusty areas, or cold, stop/start driving), change twice as frequently or as required.					
	Engine					
5	Wash or replace air cleaner elements* (refer above)		X	X	X	
6	Renew spark plugs			X	X	
7	Inspect auxiliary drive belt condition		X	X	X	
8	Renew cam belt				X	
9	Renew fuel filter				X	
10	Connect 'Tech 1/2' scanner tool and check for stored codes	X	X	X	X	
11	Inspect & record tailpipe CO		X	X	X	
	Cooling System					
12	Inspect radiator, hoses & pipework for damage or leaks. Clean radiator finning		X	X	X	
13	Check coolant level	X	X	X	X	
14	Renew coolant					12 months
	Braking System					
15	Inspect parking brake adjustment	X	X	X	X	
16	Inspect operation of brake tell tales	X	X	X	X	
17	Inspect brake pad thickness & disc condition ^		X	X	X	
	^ In conditions where the brakes are subject to heavy use, inspection may be required more frequently					
18	Inspect brake hoses, pipes & hydraulic units		X	X	X	
19	Check brake fluid level	X	X	X	X	
20	Renew brake/clutch fluid					12 months
	Steering & Suspension					
21	Check security and condition of front & rear suspension		X	X	X	
22	Inspect dampers for leaks & performance		X	X	X	
23	Inspect front & rear wheel bearings for play		X	X	X	
22	Inspect condition of driveshaft gaiters		X	X	X	
23	Inspect steering ball joints & gaiters		X	X	X	
25	Inspect free play at steering wheel		X	X	X	

i:\service\table\sn_340R_t1.emf

Continued.....

Op No.	OPERATION DESCRIPTION	SERVICE TYPE				
		After Sales	A	B	C	Other Intervals
	Wheels & Tyres					
27	Inspect tyre condition & set pressures	X	X	X	X	
	Electrical					
28	Check battery terminals for security & condition		X	X	X	
29	Inspect operation of all lights		X	X	X	
30	Inspect operation of all electrical equipment		X	X	X	
	Body					
31	Inspect operation & condition of seat belt harnesses		X	X	X	
32	Top up screenwash reservoir	X	X	X	X	
33	Renew alarm transmitter batteries (check with customer)					12 months

Road Test Performance

Engine performance ..... Tailpipe CO .....

Clutch operation ..... Gearbox operation .....

Brake performance ..... Steering performance .....

Driveline & suspension noise/vibration ..... Wheel balance .....

General comments.....

Additional work required .....

.....

.....

.....

.....

Work completed by .....

Recommended Service Times

After Sales Service:	1.8 hr
A Service:	2.8 hr
B Service:	3.2 hr
C Service:	6.7 hr

(Add 0.5 hr to all if undershield fitted)

Dealer stamp:

Date:

i:\service\table\sn_340R_t2.emf

340R.P - HEATING

A rudimentary heater is provided in the form a hot air duct linking a portion of the engine radiator outlet airflow to the vents at the front of the footwells. Note that the windscreen is electrically heated (see section M).

340R.Q - CLUTCH

The clutch used on the 340R is common with the Elise, but is mounted on a lightened flywheel, and is balanced in unit with it.

EXIGE SUPPLEMENT

	Sub-Section	Page
Introduction	EXIGE.#	2
Technical Data	EXIGE.TD	3
Chassis	EXIGE.A	5
Body	EXIGE.B	5
Front Suspension	EXIGE.C	9
Rear Suspension	EXIGE.D	9
Engine	EXIGE.E	9
Transmission	EXIGE.F	17
Wheels & Tyres	EXIGE.G	18
Steering	EXIGE.H	19
Brakes	EXIGE.J	19
Cooling	EXIGE.K	19
Fuel System	EXIGE.L	19
Electrical	EXIGE.M	20
Maintenance & Lubrication	EXIGE.O	41
Heating & Ventilation	EXIGE.P	41
Clutch	EXIGE.Q	41

EXIGE.# - INTRODUCTION

The Lotus Exige made its public debut at Brands Hatch in April 2000, as a fully road going version of the car used in the Lotus Motorsport Elise race series. The car is based on the standard Elise chassis and core body structure, but using the 178 bhp powertrain from the 340R, a sport suspension package, a modified race replica body, and race car alloy road wheels.

The specification has been optimised for drivers who require an uncompromising machine with responsive handling, higher engine output, and an elevated level of driver satisfaction, with a projected use to include track days. The car is fully type approved for European markets, with various changes from the race cars made to improve practicallity, legality or user friendliness. These changes include the fitment of a clear polycarbonate vented tailgate for rear vision, a front apron/splitter set at road height, and a revised rear aerofoil to provide the required aerodynamic balance. Elise sport suspension uses model specific calibration, in combination with specially developed Yokohama A039 tyres.

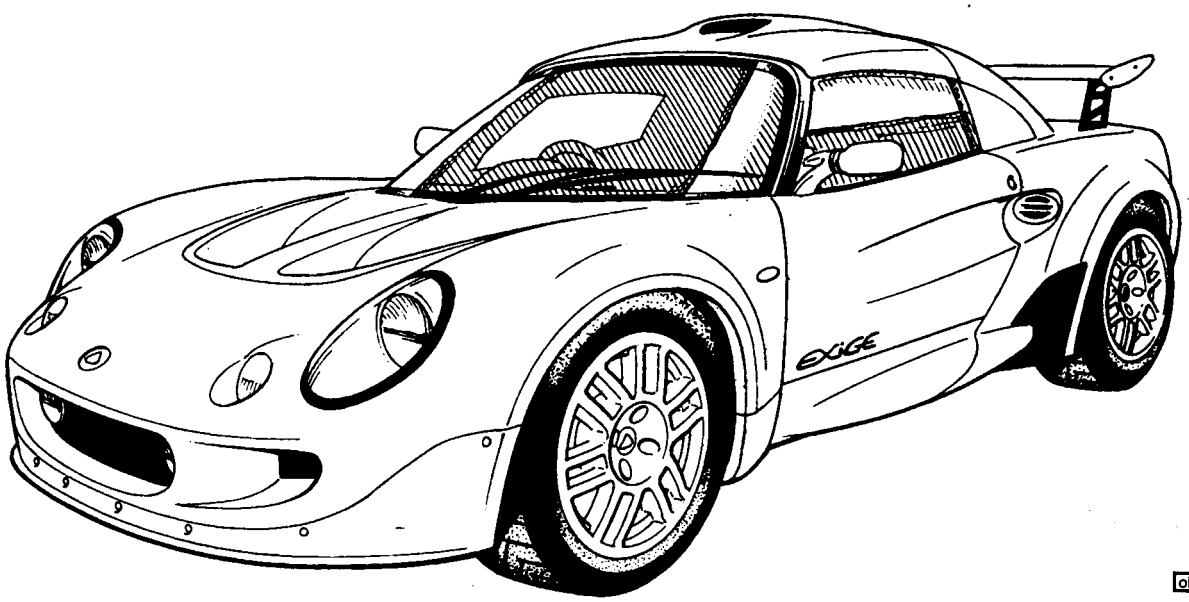

ohs85

EXIGE.TD - TECHNICAL DATA

Tyres

- Type			Yokohama A039
- Size	- front		195/50 R16 84V LTS
	- rear		225/45 R17 90W LTS
	- pressure (cold)	- front	1.6 bar (23 lb/in²)
		- rear	1.8 bar (26 lb/in²)

Wheels

Type		Light alloy, 12 spoke
Size	- front	7J x 16 ET7
	- rear	8.5J x 17 ET5
Wheel nut torque		80 - 85 Nm (59 - 63 lbf.ft)

Dimensions

Overall length		3761 mm		
Overall width		1730 mm		
Overall height (at kerb weight)		1201 mm (excl. aerial)		
Wheelbase		2300 mm		
Track	- front	1457 mm		
	- rear	1476 mm		
Ground clearance (at kerb weight)		155 mm		
Front overhang		774 mm		
Rear overhang		687 mm		
Unladen weight	- total	785 kg	>	inc. full
	- front	319 kg	>	fuel tank
	- rear	466 kg	>	
Maximum weight	- total	1012 kg	}	incl.
	- front	427 kg	}	occupants
	- rear	585 kg	}	& luggage
Trailer towing		Not permissible		

Capacities

Engine oil (refill inc. filter)	4.5 litre (7.9 imp. pt)
High/low dipstick mark difference	1.0 litre (1.8 imp. pt)
Transmission oil	2.1 litre (3.7 imp. pt)
Fuel tank	36.4 litre (8.0 imp.gall)
Cooling system	8.0 litre (1.8 imp.gall)

Front Suspension

Type		Independent. Upper and lower wishbone; co-axial coil spring/telescopic damper unit; anti-roll bar
Ride height (for geometry check)	- front	112 mm below front end of chassis siderail
	- rear	122 mm below rear end of chassis siderail
Steering axis inclination		12 ° nominal
Castor		+ 3.8°; ± 0.2°; max. side/side 0.2°
Camber		- 0.5°; + 0.1°, - 0.2°; max. side/side 0.2°
Alignment		0.1 mm toe-out overall; + 0.1 mm, - 0

Rear Suspension

Type		Independent. Upper and lower wishbone; co-axial coil spring/telescopic damper.
Ride height (for geometry check)	- front	112 mm below front end of chassis siderail
	- rear	122 mm below rear end of chassis siderail
Camber		- 2.4°; ± 0.2°; max.side/side 0.2°
Alignment		1.2 mm toe-in each side; + 0.2 mm, - 0 max.side/side 0.2 mm

Engine

Type designation		K16
Cylinder configuration		in-line 4
Capacity		1796 cm^3 (70.71 in^3)
Bore		80.00 mm (3.150 in)
Stroke		89.30 mm (3.516 in)
Compression ratio		11.0:1
Firing order		1,3,4,2
Spark plugs		Champion RC6 6YCC
Spark plug gap		0.85 ± 0.1 mm (0.033 in)
Maximum engine speed		7800 rpm
Fuel requirement		Unleaded 95 RON min.
Fuel system		Multi-point fully sequential fuel injection with Lotus controller.
Valve clearances (cold)	- inlet	0.25 mm (0.010 in)
	- exhaust	0.30 mm (0.012 in)
Max power		132.5 kW (178 bhp) @ 7,800 rpm
Max torque		172 Nm (127 lbf.ft) @ 6,750 rpm

EXIGE.A - CHASSIS

The Exige alloy chassis tub, composite front crash structure, steel roll over bar and steel rear subframe are all unchanged from standard Elise, but the earlier type of boot floor arrangement is used with an alloy floor panel rivetted between the rear longerons.

EXIGE.B - BODY

The Exige uses standard Elise body side sills, windscreen frame and door shells, and a rear bulkhead different only in captive fixings. The front services compartment lid is also common with Elise.

The 'bolt-on' front and rear clamshells are specific to Exige and are similar in styling to the motorsport series cars. The rear tailgate is a clear polycarbonate moulding bonded to a composite reinforcing frame, with intake and outlet air ducts incorporated into a 'spine' feature. A single top mounted hinge is used, together with a new cable operated latch mechanism. The roof panel incorporates an air intake duct for the engine bay, and although retained by the same fixings as are used on the Elise hardtop, the car should not be driven with the roof panel (and tailgate) removed.

Mounted on the rear body deck by two moulded plinths, is a new motorsport style aerofoil with integral endplates, which transfers loads into the chassis via rear clamshell support plates. The rear aerofoil and front splitter panel combine to provide balanced aerodynamic forces for optimum high speed handling.

Front Clamshell

The front clamshell is secured by threaded fasteners in a similar manner to the Elise, but uses sill extensions behind the front wheelarches to which the clamshell rear ends are attached, and a seperate, screwed on splitter panel around the clamshell front lower edge.

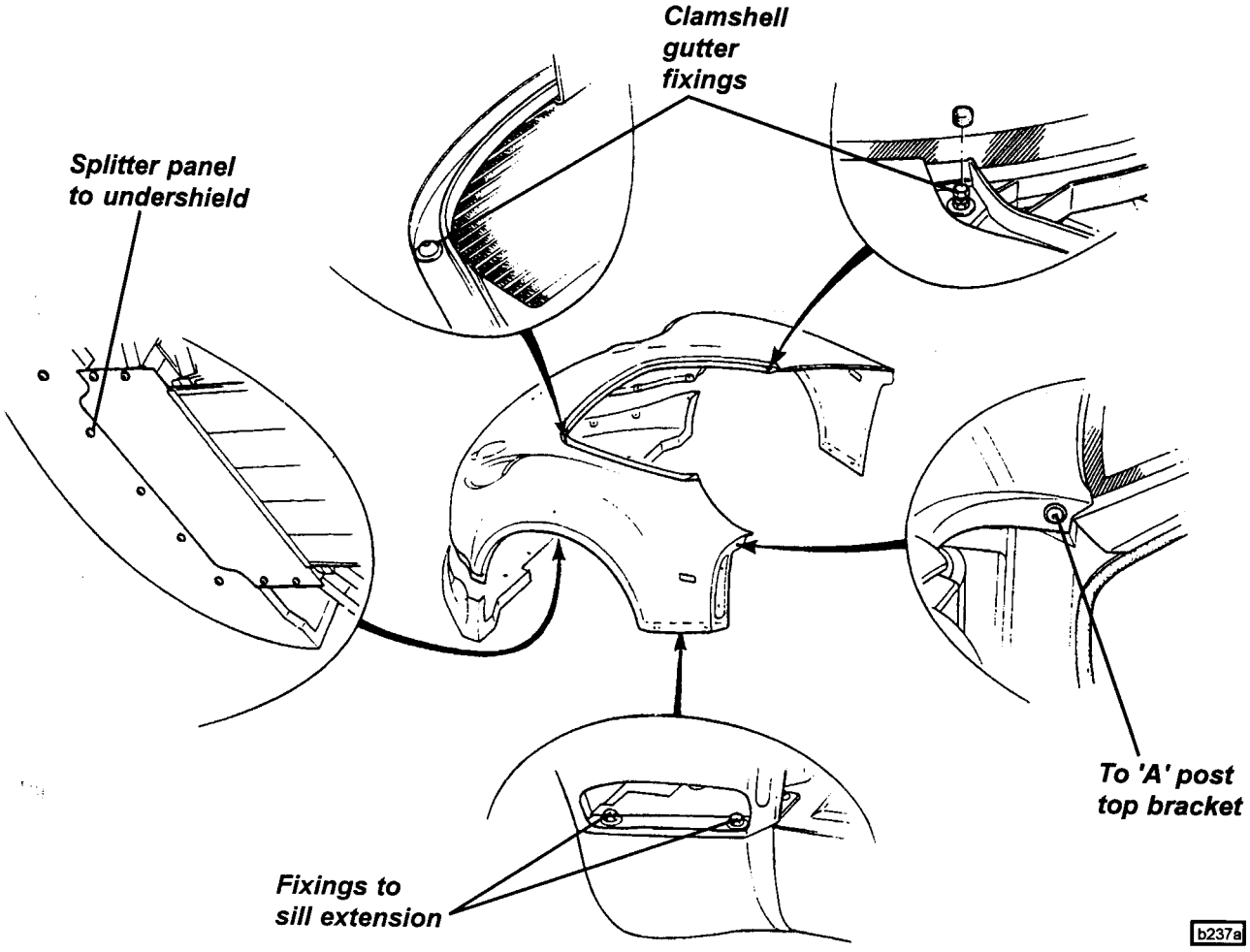

To remove:

1. Remove both front road wheels and wheelarch liners.

2. At each side, remove the M8 fixing securing the clamshell to the sill front extension panel.

3. Remove the single M8 screw securing each top rear corner of the clamshell to a bracket at the top of the 'A' post.

4. Remove the four fixings in the bonnet gutter, one at each rear end, and one in each front corner. The rear pair are also used as adjustable mounts for the bonnet closing buffers, and use M8 captive fixings in the screen frame buttresses. The front pair use M8 captive fixings in the radiator mounting panel. Take note of the shim stacks fitted at each of the fixing points.

5. From beneath the nose, remove the five screws securing the rear edge of the splitter panel to the alloy undershield.

6. Disconnect the clamshell wiring harness at the driver's side of the front compartment, and lift the clamshell from the car. Note any spacing washers or shims fitted at any fixing point.

7. Refit the clamshell in reverse order to removal, taking care to retain any spacer washers in their original positions.

Rear Clamshell

The rear clamshell fixings differ from the standard Elise in using vertical alloy panels bonded to the shell either side of the luggage space, and secured to the top surface of the rear longerons. The front upper edge of the shell is secured to the rear edge of the roof panel, and the bottom front edges of the clamshell wrap beneath the rear end of the sills. The early type boot floor is used, incorporating a rearward extension to pick up the clamshell behind the rear licence plate.

To remove:

1. Remove both rear road wheels and wheelarch liners.

2. Mark its position before releasing the tailgate panel from the hinge blade, noting any shim plates. Disconnect the release cable from the tailgate latch, and release any cable fixings.

3. Remove the trim panel from each side of the engine bay after releasing the fixings to the clamshell gutter and engine bay front surround.

4. Remove the fuel filler cap and release the four screws securing the fuel filler neck to the clamshell. Remove the washer ring, and withdraw the neck from the clamshell aperture.

5. Release the single screw each side securing the front of the clamshell gutter to the engine bay front surround.

6. Release the three screws each side securing the clamshell support plates to the top of the longerons.

7. Remove the rear number plate and release the single fixing securing the clamshell to the boot tray.

3. Disconnect the rear harness at the LH rear of the luggage compartment, and the harness connectors to the rear fog and reverse lamps.

9. Release the fixings securing the bottom edge of the clamshell to the tank bay closing panel, and that securing the front of each wheelarch to the body sill.

10. From inside the cockpit, release the clamshell front fixing from inside each 'B' post.

11. From the door aperture, remove the two fixings securing the front edge of the clamshell.

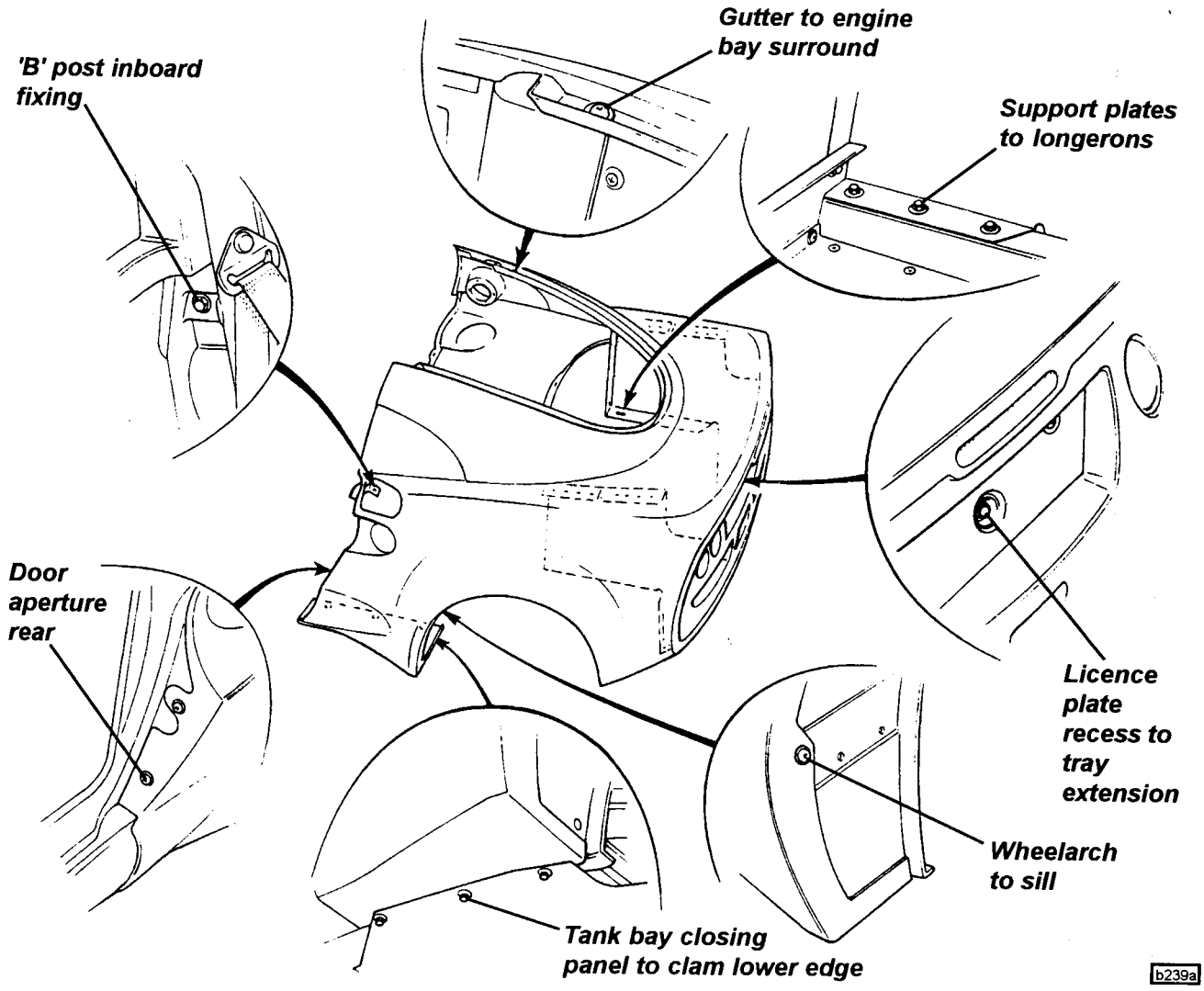

12. Carefully ease apart the two front sections of the clamshell as the shell is manouvered rearwards off the car.

13. Refit the clamshell in reverse order to removal.

Rear Aerofoil

The rear aerofoil is a hollow glassfibre composite moulding, with integral endplates. The aerofoil is secured to two moulded polyurethane plinths, via M5 bolts through the plinth top flange into captive nuts in the aerofoil, whereas the plinths are fixed to the body by two M6 studs moulded into the bottom of each plinth, with nuts fitted inside the clamshell. Loads from the aerofoil plinths are transferred into the clamshell support plates via alloy angle brackets.

Roof Section

The roof panel incorporates an air intake duct feeding into a corresponding duct in the tailgate. The single hinge for the tailgate is mounted in the rear end of the roof duct, and the standard Elise aerial is mounted on the top of the duct. The roof panel is retained in a similar manner to that used on standard car hard tops, but has an extended rear flange which underlaps the forward edge of the rear clamshell.

The roof may be removed with the clamshell 'in-situ', but requires that the rear clamshell front fixings be released.

To remove the roof panel:

- remove the tailgate from the hinge, or the hinge from the roof;
- disconnect the aerial lead;

- release the fixings securing the top front corners of the rear clamshell to rear bulkhead;
- remove the header rail clamp from inside the front of the roof;
- release the over-centre latches clamping the rear of the roof to the upper rear bulkhead, and lift off the roof panel.

Tailgate

The tailgate panel comprises a clear polycarbonate moulding, bonded to a composite reinforcing surround, and with an air intake/exit duct incorporated into a spinal feature. A single hinge is mounted inside the roof air duct, and a new latch mechanism is mounted on a plinth at the rear of the clamshell aperture, with a loop type striker fixed to the tailgate. The existing cable release mechanism (with stainless cable) is utilised.

The polycarbonate screen is hard coated on both inside and outside surfaces, and should be cleaned using normal car wash preparations. Aerosol type glass cleaners may be used if required, but liquid or paste type abrasive polishes should NOT be used.

Stone Chip Protection

A stone chip protective film set tailored specifically for the Exige is available under part number A111V0627S.

Seats & Seat Belts

Standard equipment consists of 111S cloth (leather option) trimmed seats and inertia reel seat belts. Cars may be specified with a factory fit option of sports style seats trimmed in Alcantara suede, using 340R seat runner sliders on the driver's side, and the 340R fixed seat frame for the passenger. Packaged with this seat option are 340R 4-point harnesses, using a shoulder harness anchorage bar bolted across the roll over hoop. For competition use, the roll over bar reinforcement kit with removeable forward strut may be dealer fitted.

Interior

A trim pack option comprises Alcantara suede in either blue, red, silver or black, applied to the door inserts, sill trims, steering wheel centre pad and dash inserts.

EXIGE.C - FRONT SUSPENSION

The Exige is fitted with the Elise Sport suspension package which includes adjustable spring platform Koni dampers with Exige specific springs, and the uprated front anti-roll bar in Nylon chassis mounting blocks. The standard setting for the front anti-roll bar is the central of 5 available holes. Steering rack positioning plates from the Sport kit are used to suit the specified mid-laden ride height of 112/122 mm, which differs from other sport variants due to the increased wheel diameter. Standard Elise suspension links and hub carriers are used.

Geometry

Mid-laden ride height (for geometry check)	- front	112 mm below front end of chassis siderail
	- rear	122 mm below rear end of chassis siderail
Steering axis inclination		12° nominal
Castor		+ 3.8°; ± 0.2°
		max. side/side 0.2°
Camber		- 0.5°; + 0.1°, - 0.2°
		max. side/side 0.2°
Alignment		0.2 mm toe-out overall; + 0.2 mm, - 0

EXIGE.D - REAR SUSPENSION

The Exige is fitted with the Elise Sport suspension package which includes adjustable spring platform Koni dampers with Exige specific springs. Standard Elise wishbones and 'integral stud' type toe-links are used in conjunction with standard Elise forged steel hub carriers. The specified mid-laden ride height of 112/122 mm differs from other sport variants due to the increased wheel diameter. For optimum rear bump steer set up information, refer to sub-section XA.8.

Geometry

Mid-laden ride height (for geometry check)	- front	112 mm below front end of chassis siderail
	- rear	122 mm below rear end of chassis siderail
Camber		- 2.4°; ± 0.2°
		max.side/side 0.2°
Alignment		1.2 mm toe-in each side; + 0.2 mm, - 0
		max.side/side 0.2 mm

EXIGE.E - ENGINE

The engine is based on the Rover 1.8 litre 'K' series unit, and is reworked in a similar way to the VHPD 190 race version, but tuned for road use. Output of the engine is as follows:
Max. power; 132.5 kW (177.7 bhp) @ 7,800 rpm
Max. torque; 172 Nm (127 lbf.ft) @ 6750 rpm

Performance measures include a big valve cylinder head, re-profiled inlet and exhaust camshafts, a new cast alloy 4-branch intake manifold with individual throttles, large intake airbox and performance air filters, large diameter 4-2-1 exhaust manifold and new muffler, lightweight flywheel, Lotus engine management system with maxiumum engine speed limited to 7,800 rpm. Engine durability modifications include a forged crankshaft, new forged connecting rods, forged pistons with revised rings, mechanical tappets.

Engine Management Component Location

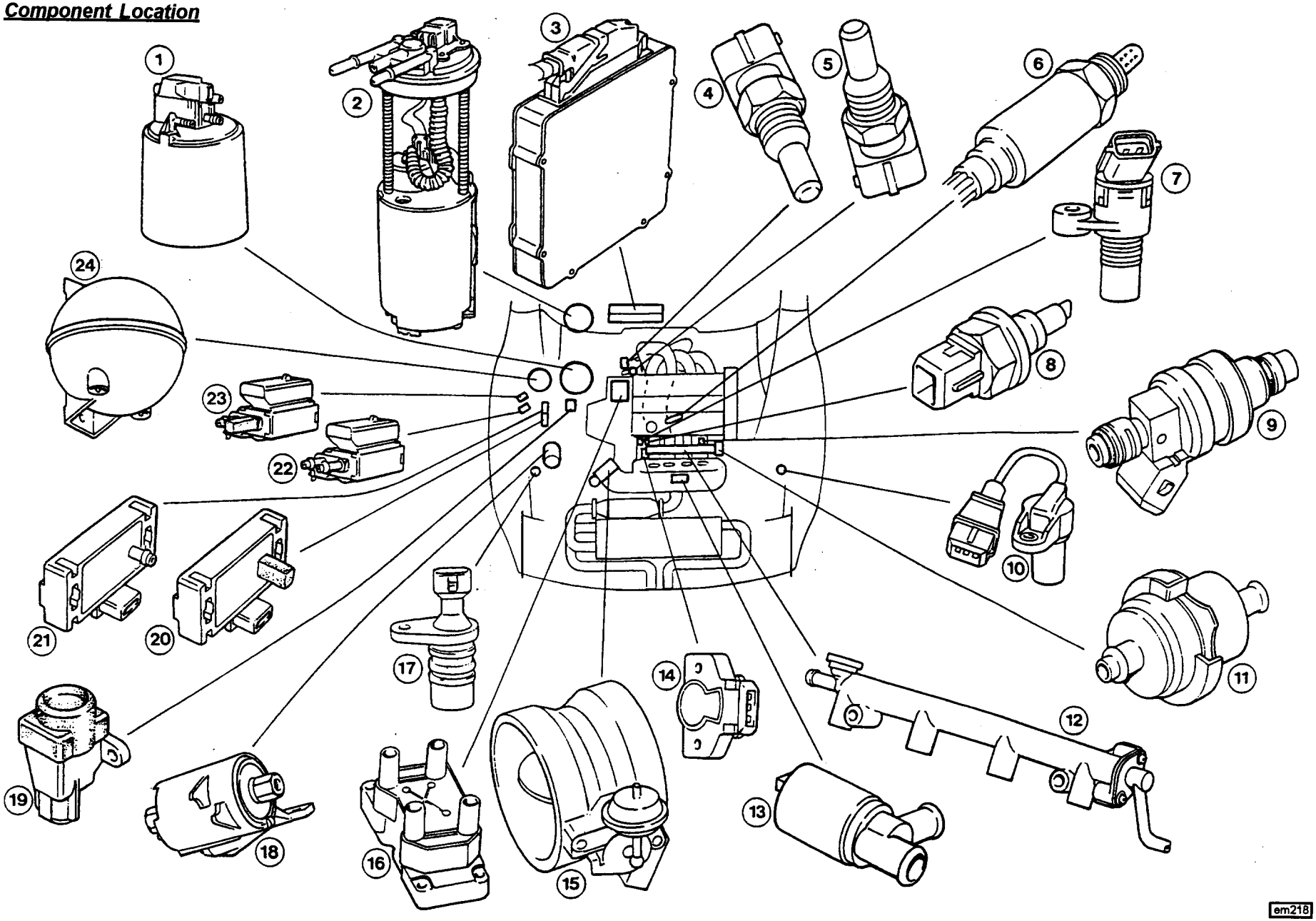

Key to engine management component location diagram

1. Evaporative emission (charcoal) canister
2. Fuel pump assembly
3. Electronic Control Module (ECM)
4. Engine Coolant Temperature (ECT) sensor (brown)
5. Coolant temperature gauge sender (blue)
6. Oxygen sensor
7. Crankshaft position sensor
8. Manifold Air Temperature (MAT) sensor
9. Fuel injector
10. Engine management vehicle speed sensor
11. Fuel pressure regulator valve
12. Fuel rail
13. Idle Air Control (IAC) valve
14. Throttle Position (TP) sensor
15. Intake resonator valve
16. Ignition coil pack
17. Speedometer sensor
18. Fuel filter
19. Inertia switch
20. Barometric pressure (BARO) sensor
21. Manifold Air Pressure (MAP) sensor
22. Resonator charging solenoid valve
23. Resonator locking solenoid valve
24. Vacuum reservoir

Engine Management

The engine management electronic controller is common with the Esprit V8 and uses some of that model's components, including:

- Idle Air Control (IAC) valve; mounted on the rear of the engine and connected by hose between the intake airbox backplate and ports in the underside of each inlet manifold tract.
- Ignition Coil Pack; one of the two identical V8 coil packs, mounted on the rear of the cylinder head.
- Electronic Control Module (ECM); mounted on the cabin rear bulkhead - controls engine management systems including fully sequential injection and direct ignition.
- Manifold Air Pressure (MAP) and Barometric pressure (BARO) sensors; mounted on the engine bay LH wall.
- A vehicle speed signal is provided for the ECM from a new wheel speed sensor mounted on the RH rear hub carrier. The LH hub carrier sensor is retained for speedometer data. Note for reference, that the 340R uses only the LH sensor, but splits the signal to speedo and engine ECM in the instrument controller.

Other engine management components are as standard Elise.

The OBD2 (On Board Diagnostics version 2) connector socket is located within the electronics box on the cabin rear bulkhead. For fault diagnosis, the 'Tech 1' tool, including the Esprit V8 cartridge, should be plugged into this socket, and any trouble codes read in conjunction with Service Notes manual 'Section EMM'. A limited range of trouble codes are available:

Trouble Code		*Description*
P0107	Manifold Absolute Pressure	Circuit low input
P0108	Manifold Absolute Pressure	Circuit high input
P0112	Intake Air Temperature	Circuit low input
P0113	Intake Air Temperature	Circuit high input
P0117	Engine Coolant Temperature	Circuit low input
P0118	Engine Coolant Temperature	Circuit high input
P0122	Throttle Position	Circuit low input
P0123	Throttle Position	Circuit high input
P0131	Oxygen Sensor	Circuit low voltage
P0132	Oxygen Sensor	Circuit high voltage
P0201	Injector Circuit Malfunction	Cylinder 1
P0203	Injector Circuit Malfunction	Cylinder 3
P0205	Injector Circuit Malfunction	Cylinder 4
P0207	Injector Circuit Malfunction	Cylinder 2
P0601	ECM Integrity	Watchdog
P0606	ECM Integrity	Checksum
P1100	Fuel Pump	Relay or ciruit open
P1101	Fuel Pump	Relay or ciruit shorted
P1106	Barometric Pressure	Circuit range/performance problem
P1107	Barometric Pressure	Circuit low input
P1108	Barometric Pressure	Circuit high input
P1420	Battery Voltage	Too high
P1421	Battery Voltage	Too low
P1501	Resonator Valve	Not closing
P1502	Resonator Valve	Not opening

Intake System & Resonator Valve: A short intake manifold assembly incorporates individual inlet tract butterfly throttles operated via cable quadrant between cylinders 2 & 3. A glassfibre composite airbox, bigger still than the Sport 190 version, is supplied with air via large diameter trunking drawing ambient air from the intake duct in the left hand body ahead of the rear wheelarch. Incorporated in the intake trunking at the entrance to the airbox, is a butterfly valve which is controlled by the engine management system, and is designed to suppress resonant intake noise under certain engine operating conditions. The valve is sprung open and is closed by a vacuum actuator supplied via a pair of solenoid valves mounted at the LH side of the engine bay. The solenoid valves are controlled by the engine management ECM which is programmed to close the butterfly valve when accelerating with wide throttle through the lower gears at about 30 - 40mph.

The flap capsule is connected to a vacuum charging solenoid valve which either ventilates the the capsule, or connects it to a vacuum locking solenoid valve. The locking valve either seals the charging valve, or connects with the manifold vacuum supply via a reservoir mounted on the roll over bar back stay.

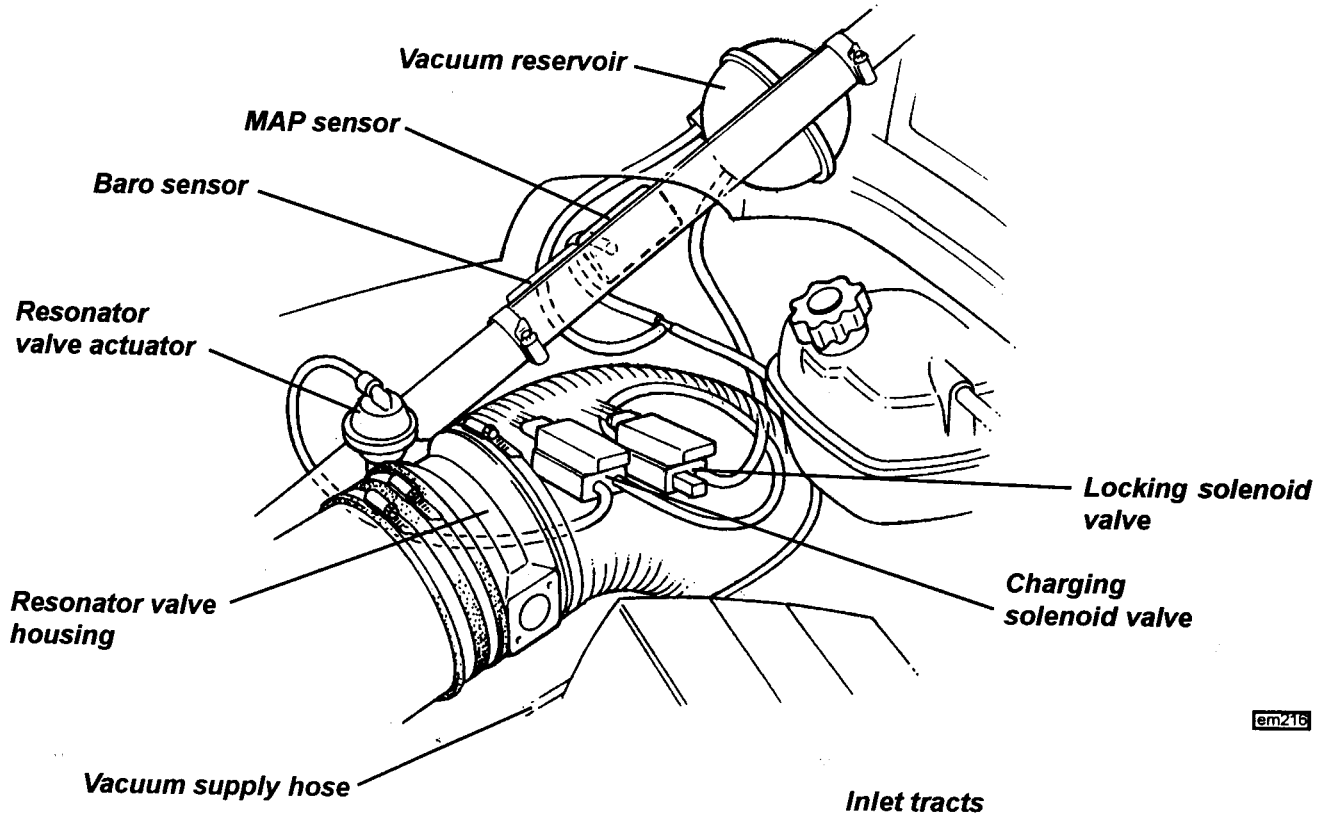

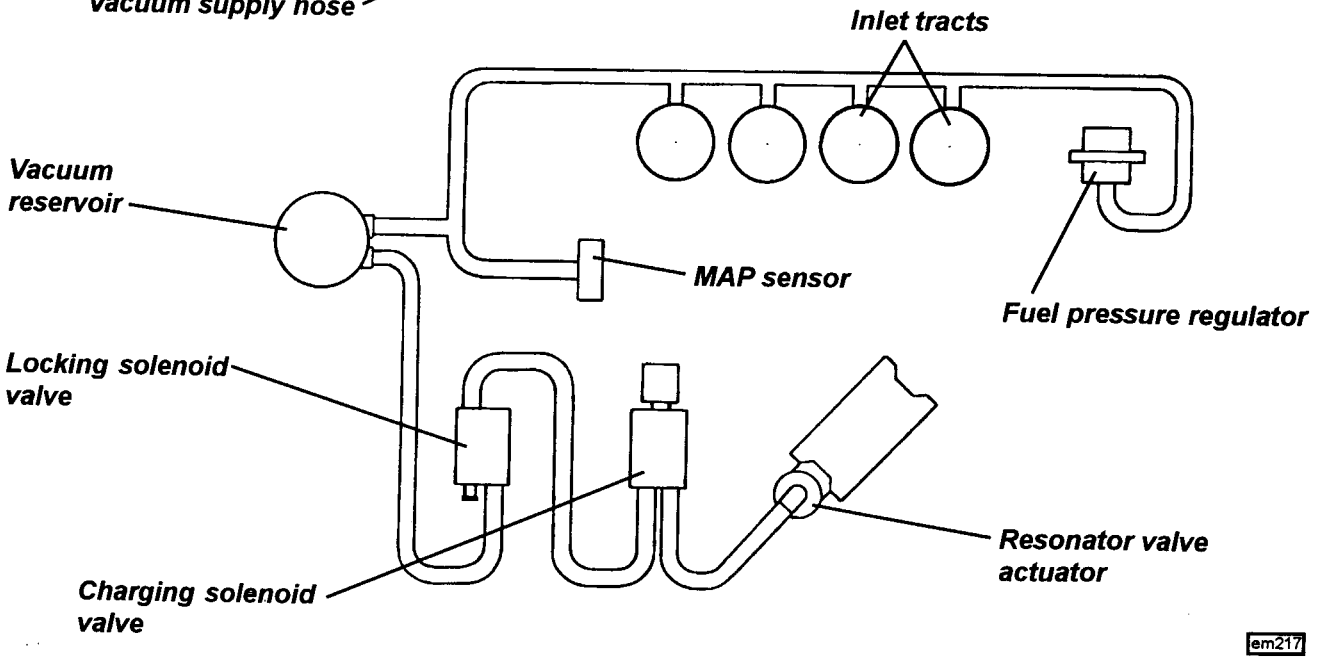

The sequence of operation is as follows:

a). Normal running - Both solenoid valves off - Flap valve open

The flap capsule is vented to atmosphere, and the flap valve is sprung open.

Inlet manifold sealed by the locking capsule.

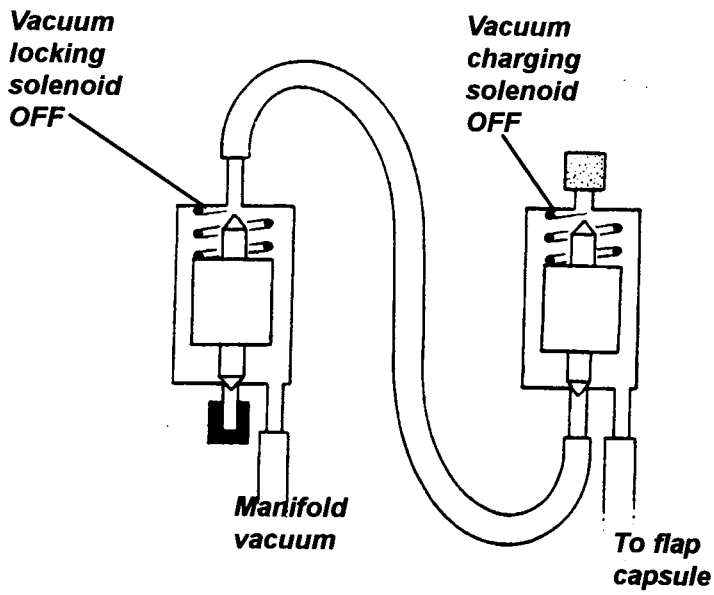

b). Cruising at 30 mph in second or third gear - Charging solenoid on - Flap valve closed

Charging solenoid is energised.

Flap capsule is connected to manifold vacuum - flap valve is closed.

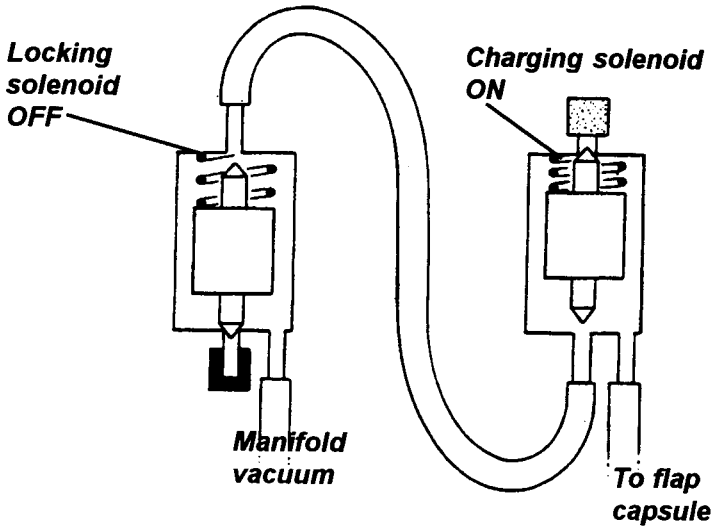

c). Cruising or accelerating at 30 mph in second or third gear - Both solenoids on - Flap valve closed

Within two seconds of condition (b) occuring, the vacuum locking solenoid is also energised and seals the vacuum in the flap capsule. This is necessary in order to prevent loss of manifold vacuum during wide throttle acceleration resulting in insufficient vacuum at the flap capsule to maintain flap closure.

When the conditions required for intake resonance suppression no longer apply, both solenoid valves are de-energised and the flap valve is opened.

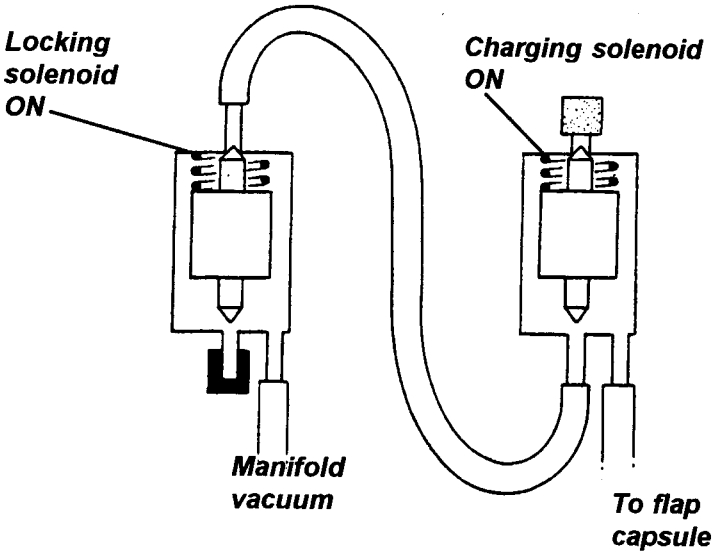

em215

Breather hoses, vacuum pipes & IAC

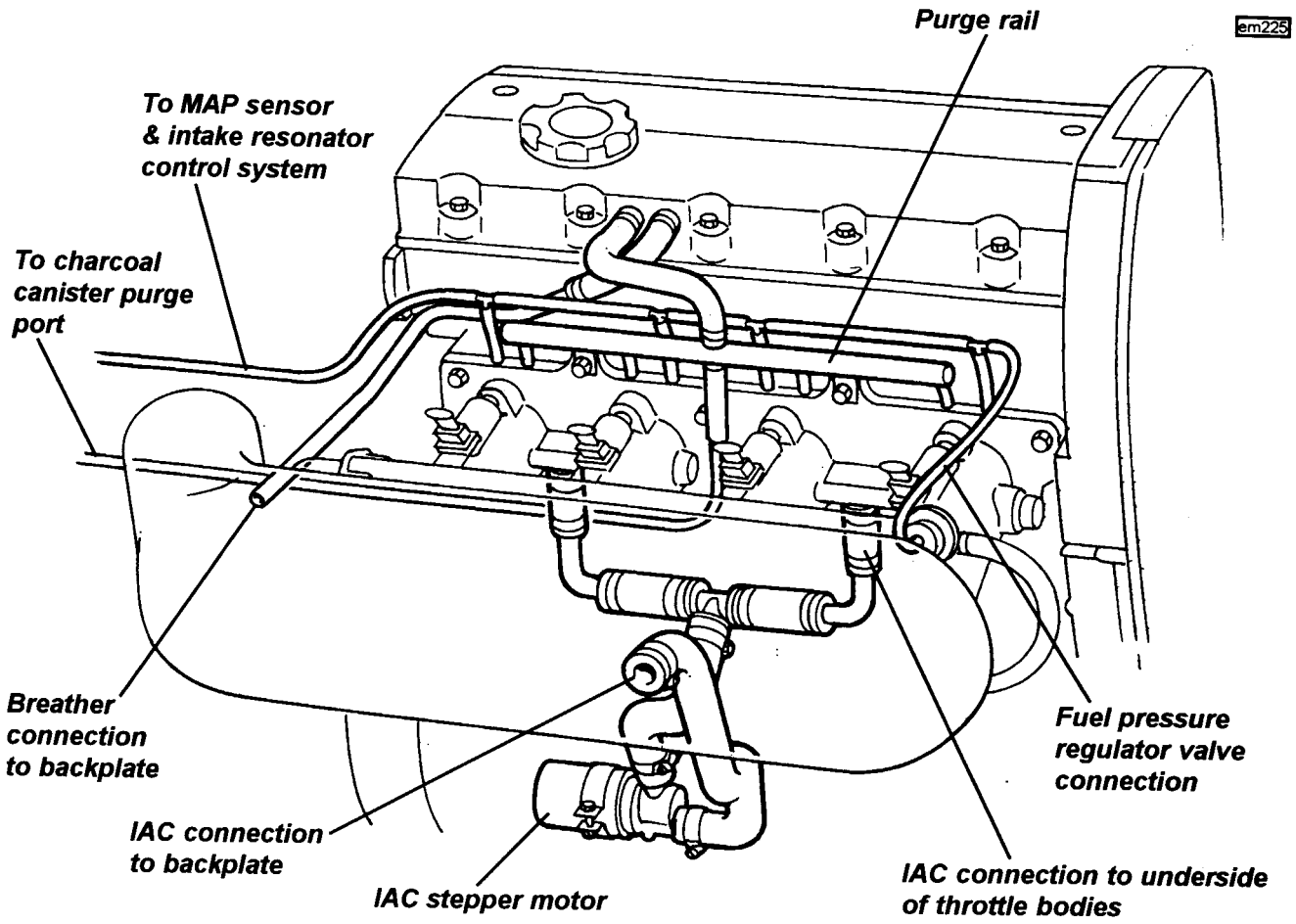

Air Cleaner: The Exige uses two identical Pipercross conical foam air cleaner elements contained within the air intake trunking; a primary filter mounted at the inlet end of the trunking, and a secondary filter mounted immediately after the resonator valve at entrance to the airbox. When the vehicle is operated in a relatively clean environment, the primary filter should be cleaned every 'A' service, and the secondary filter every 'B' service, but where a dusty or smog laden atmosphere prevails, more frequent servicing will be required dependent on the level of pollution. When removing either filter, take care not to contaminate the engine side of the duct or airbox with dirt. Follow the filter manufacturer's cleaning instructions:

1. Dislodge any large embedded dirt by tapping the filter gently. Brush with a soft bristle brush to remove other dirt.
2. Spray Pipercross foam air filter cleaner liberally onto the entire filter. Let soak for 10 minutes.
3. Never use other cleaning agents e.g. gasoline, caustic strong detergents or solvents. Never use steam cleaners or a high-pressure car wash. Doing so will invalidate the warranty.
4. Rinse off the filter with low-pressure tap water from the clean side to the dirty side. This will remove dirt and not drive it into the filter.
5. Always let excess water drain from the filter Let the filter dry naturally. Never use compressed air; open flame or hot air dryers.
6. After cleaning the filter, Pipercross Dirt Retention Additive (DRA) must be re-applied. Pipercross DRA is a very efficient high tack polymer. Never use motor oil, diesel fuel, ATF or WD40.
7. Re-install the filters and intake ducting.

Note that the intake trunking is marked with an arrow indicating the direction of airflow for optimum performance.

Exhaust System: The Exige and 340R use a special exhaust manifold fabricated from 45mm steel tube, leading via a short flexible section to the standard catalytic converter, and then into the transverse muffler. The Exige muffler is based on that of the 340R, the body of which is more voluminous than the standard Elise muffler, but in this application, no external wrap is used, and the bigger bore tailpipes are 50mm diameter with correspondingly larger trims.

Starting Procedure: The fuel injection and engine management system controls fuel delivery and engine settings under all normal operating conditions.

i) If necessary, mobilise the engine by pressing the ignition key head transmitter button (see 'Vehicle Security Alarm').
ii) Insert the ignition key into the switch/steering lock and turn to position 'II' to switch on the ignition (note that position III is not operative).
iii) Press the accelerator pedal to one quarter travel (approx. 25mm) and turn the key against spring pressure to position 'III' to engage the starter motor. As soon as the engine starts, release key pressure, and adjust the accelerator position to maintain 2,000 rpm for 10 seconds to minimise emissions.
iv) If the engine fails to start within 15 seconds, stop cranking and pause for 10 seconds before a second attempt. If further efforts are unsuccessful, increase throttle opening to half way, and repeat.
v) If the engine still fails to start, it is likely that it will have become fuel flooded. Provision is made to cut off the fuel supply completely when cranking, by fully depressing the accelerator. Repeat the starting procedure holding the pedal fully down, and release immediately the engine starts.

Idle Speed: Engine idle speed is controlled electronically by the engine management computer, and is normally about 1250 rpm. An uprated idle speed is required under certain operating conditions including the engine warm up phase, during which time the raised idle helps to speed the time taken for the catalytic converter to reach operating temperature, as well as inhibiting engine stall. Idle speed will return to normal automatically when the engine has warmed sufficiently.

EXIGE.F - TRANSMISSION

The Exige uses the same close ratio transmission as is fitted to the Elise 111S. Compared with the standard Elise transmission, the final drive is lowered from 3.94:1 to 4.20:1, first and second gear ratios are raised, and fifth is lowered. Compared with the 111S, the overall ratios are raised slightly due to the larger diameter wheels used on the Exige.

The only lubricant recommended for the Exige transmission is Texaco MTF 94, available under Lotus part number A111F6017V.

Gear	*Ratio*	*Final Drive*	*mph (km/h) /1000 rpm*
First	2.92 : 1	)	5.8 (9.3)
Second	1.75 : 1	)	9.9 (15.9)
Third	1.31 : 1	) 4.20 : 1	13.1 (21.1)
Fourth	1.03 : 1	)	16.7 (26.9)
Fifth	0.85 : 1	)	20.2 (32.5)
Reverse	3.00 : 1	)	

EXIGE.G - WHEELS & TYRES

The Exige uses alloy road wheels made by Rimstock and featuring the 12 - spoke, black finish, design used on the race series cars. Wheel diameters, at 16 and 17 inches front and rear, are increased by one inch over standard Elise, with rim widths of 7 and 8.5 inches.

Lotus engineers have worked with the tyre manufacturer Yokohama, to produce an A039 tyre specification for the Lotus Exige to optimise performance on both road and track. When replacing tyres, ensure that the correct Lotus specification of the tyre is fitted, identified by 'LTS' following the size designation on the tyre sidewall. The tread pattern is directional, so that the tyre must be fitted onto the wheel with regard to which side of the car the wheel is to be fitted. A direction of rotation arrow is included in the tyre sidewall markings.

Note that the Exige wheel/tyre assemblies are not approved for fitment on other Elise variants.

Wheelnuts

Note that the wheelnuts and roadwheels on the Exige, use a 60° taper, and not the spherical seating used by other Elise variants. It is most important that in order to maintain the highest level of safety, only the approved roadwheels and nuts are used.

Tyres

Type		Yokohama A039
Size - front		195/50 R16 84V LTS
- rear		225/45 R17 90W LTS
- pressure (cold)	- front	1.6 bar (23 lb/in²)
	- rear	1.8 bar (26 lb/in²)

Wheels

Type	Light alloy, 12 spoke
Size - front	7J x 16 ET7
- rear	8.5J x 17 ET5
Wheel nut torque	80 - 85 Nm (59 - 63 lbf.ft)

EXIGE.H - STEERING

All the steering components used on the Exige are as standard Elise, except for the rack positioning plates which are 'sport' specification to suit the lowered ride height. The Sport removeable steering wheel may be fitted for track use. For further information refer to section HE and XA.

EXIGE.J - BRAKES

The Exige uses the drilled cast iron discs and brake pads as fitted to the Elise 111S. For track use, the motorsport brake pads (front; A111J0150S, rear; A111J0151S) are recommended. For further information refer to section JH.

EXIGE.K - COOLING

The engine cooling system is unchanged from standard, but all Exige models are factory fitted with oil coolers.

EXIGE.L - FUEL SYSTEM

The fuel system is unchanged from standard Elise. Unleaded fuel with a minimum octane rating of 95 RON should be used.

EXIGE.M - ELECTRICAL

VEHICLE SECURITY

The Exige uses the same vehicle Meta security system as is used on 340R, being either an M36 T2 electronic immobiliser meeting Thatcham category 2 requirements, or, as an optional upgrade, a full M99 T2 alarm system incorporating M23 cockpit intrusion sensing and a self powered siren, which meets Thatcham 1. The Lucas 5AS security module used on the standard Elise is not fitted. The Meta system operates as follows:

Keys & Vehicle Security Alarm

A single key operates the doors and combined ignition switch/steering lock, with a second, smaller key type for the fuel filler cap. The head of each ignition key incorporates an electronic transmitter for operation of the engine immobiliser and security alarm system. Duplicates of both keys are supplied with the new vehicle. The key numbers are stamped on the keys themselves, and should be recorded by the owner and kept with the vehicle documents to enable the dealer to have replacements made if necessary.

Standard Immobiliser

In order to provide a measure of automatic vehicle security, independent of any driver initiative, the Meta M36 T2 immobiliser will 'passively' immobilise the engine's cranking and running circuits about 20 seconds after the ignition has been turned off. The immobilised state will be indicated by the immobiliser tell tale mounted ahead of the gear lever, blinking once every two seconds.

To mobilise the engine, press once the button on the transmitter key head (with ignition either on or off). Mobilisation will be acknowledged by the tell tale being extinguished.

Upgraded Security System

For enhanced protection from theft and vandal damage, the EXIGE may be specified factory built with a 'Meta' vehicle security system which incorporates the following features:

- Ingress protection using sensing switches on the front access panels and engine lid.
- Selectable cockpit intrusion sensing using a microwave sensor.
- Automatic (passive) engine immobilisation to prevent the engine from being started.
- Self powered siren to maintain protection if the vehicle battery is disconnected.
- 'Dynamic coding' of the transmitter keys; Each time the transmitters are used, the operating frequency is randomly changed to guard against the possibility of code copying.

Passive Immobilisation

In order to provide a measure of automatic vehicle security, independent of any driver initiative, the Meta M36 T2 immobiliser will 'passively' immobilise the engine's cranking and running circuits about 20 seconds after the ignition has been turned off. The immobilised state will be indicated by the alarm tell tale mounted ahead of the gear lever, blinking once every two seconds.

To mobilise the engine, press once the button on the transmitter key head (with ignition either on or off). Mobilisation will be acknowledged by the tell tale being extinguished

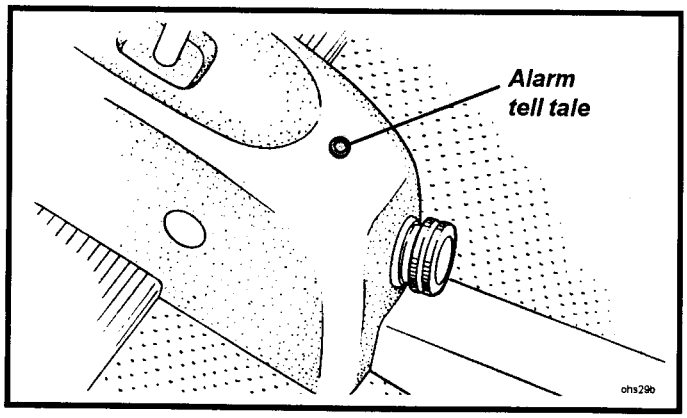

Arming the Alarm

Remove the ignition key and check that the doors, tailgate and front bonnet are closed. Press the transmitter button for about two seconds. This command will be acknowledged by:

- Two flashes of the hazard warning lamps;
- The tell tale ahead of the gear lever lighting, and blinking off once a second. After a set-up period of 25 seconds has elapsed, the tell tale will go out, and blink on once a second.

Check that these indications occur. If not, press the button a second time, as the first press may have only switched off the passive immobilisation (see above). Note that if the system is armed when a door, tailgate or front bonnet is not fully closed, four beeps will be heard as warning. If still open after 25 seconds, the alarm will be armed with that switch excluded from the circuit.

After arming the system, a period of at least 25 seconds must elapse before all functions and sensors become fully active. After this time, the alarm will be triggered by any of the following actions:

- Opening a door, tailgate or front bonnet;
- Movement detected within the cockpit;
- Energising the ignition circuit ('hot wiring');
- Interruption of the vehicle battery power supply.

When triggered, the electronic siren will sound and the hazard warning lamps will flash for a period of approximately 30 seconds before closing down and resetting, ready for any further triggering input. If a trigger is continuously present, the alarm will repeat after a short delay, and continue in this sequence for about ten cycles.

To silence the alarm when triggered, disarm as described below.

Disarming the Alarm

To disarm the alarm prior to entering the vehicle, or if the alarm has been triggered, press once the button on the transmitter key. This command will be acknowledged by:

- One flash of the hazard warning lamps;
- Extinguishing of the alarm tell tale ahead of the gear lever.

If the alarm had been triggered during the last armed period, the alarm tell tale will light and 'off blink' a code(s) for about 30 seconds to indicate which of the triggers was responsible:

4 blink offs every 6 seconds - engine lid or front access panels;
8 blink offs every 6 seconds - ignition input;
1 blink off every 6 seconds - microwave sensor;

This coding will be repeated each time the alarm is disarmed until the memory is cleared by pressing the transmitter button with the ignition switched on.

Intrusion Sensing

A microwave sensor is mounted in the rear bulkhead electronics compartment, and is able to detect substantial physical movement within the cockpit, and trigger the alarm. The range and sensitivity of the intrusion sensor may be adjusted if necessary by turning an adjuster screw on the unit.

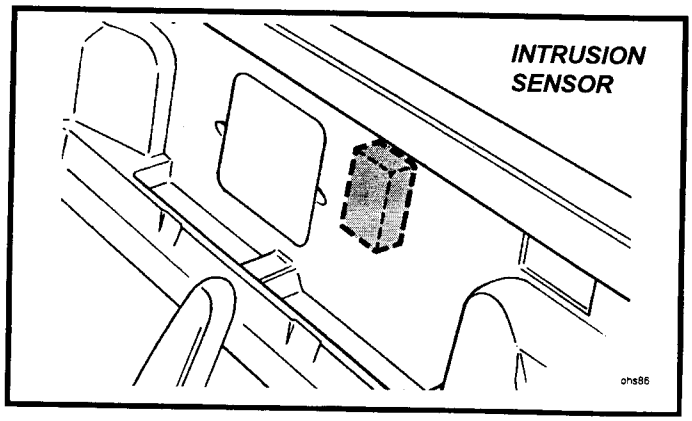

If desired, the alarm may be armed without the intrusion sensor or battery interruption ciruits being active by:

- with the alarm disarmed, hold the transmitter button pressed for a 4 second period. This will be acknowledged by 3 flashes of the hazard lamps, and blinking of the alarm tell tale.

Note:

Intrusion sensing will automatically be reinstated the next time the alarm is armed.
Do not inhibit operation of the radar detector by placing bags or large objects against the cabin rear bulkhead.

Transmitter Key Battery Replacement

The batteries for the key head transmitters should be renewed at six monthly intervals to ensure continuity of operation.

To replace transmitter battery:

a). Use a thin blade to prise apart the two halves of the transmitter key head, and withdraw the battery.

b). The transmitters are powered by a 3v long life lithium battery type CR2032. With normal use, this should last between 3 and 5 years. After opening the new battery packaging, touch only the sides of the battery, and fit the battery into the key case with the positive side (+) upwards as shown.

c). Press the battery case together.

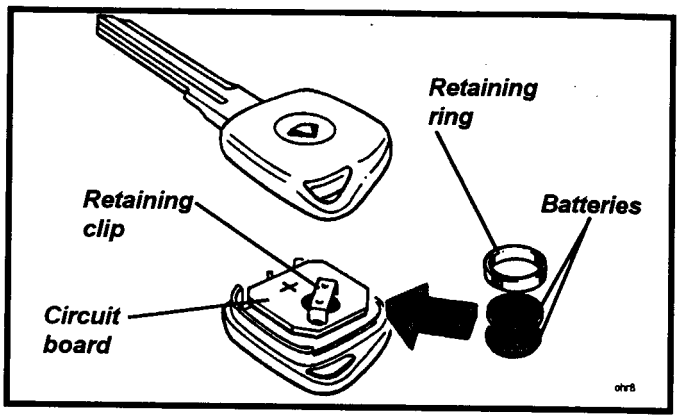

Disconnecting the Vehicle Battery

- Before disconnecting the battery, ensure that the alarm system is disarmed.
- On reconnection of the battery, the alarm will automatically be set. Have the transmitter ready to disarm.

Component Location

The alarm system components are located as follows:

- Electronic Controller: Mounted on the top of the scuttle beam above the passenger footwell. Some accessibility is available via the audio set aperture.
- Siren Unit: Mounted on the passenger side of the scuttle beam.
- Immobiliser Module: Mounted in the electronics box on the cabin rear bulkhead.
- Intrusion Sensor: Stuck to engine ECM in bulkhead electronics box.
- The tailgate sensor switch is mounted at the rear of the lid aperture, alongside the latch.
- The front bonnet sensor is mounted at the rear of the aperture alongside the latch.

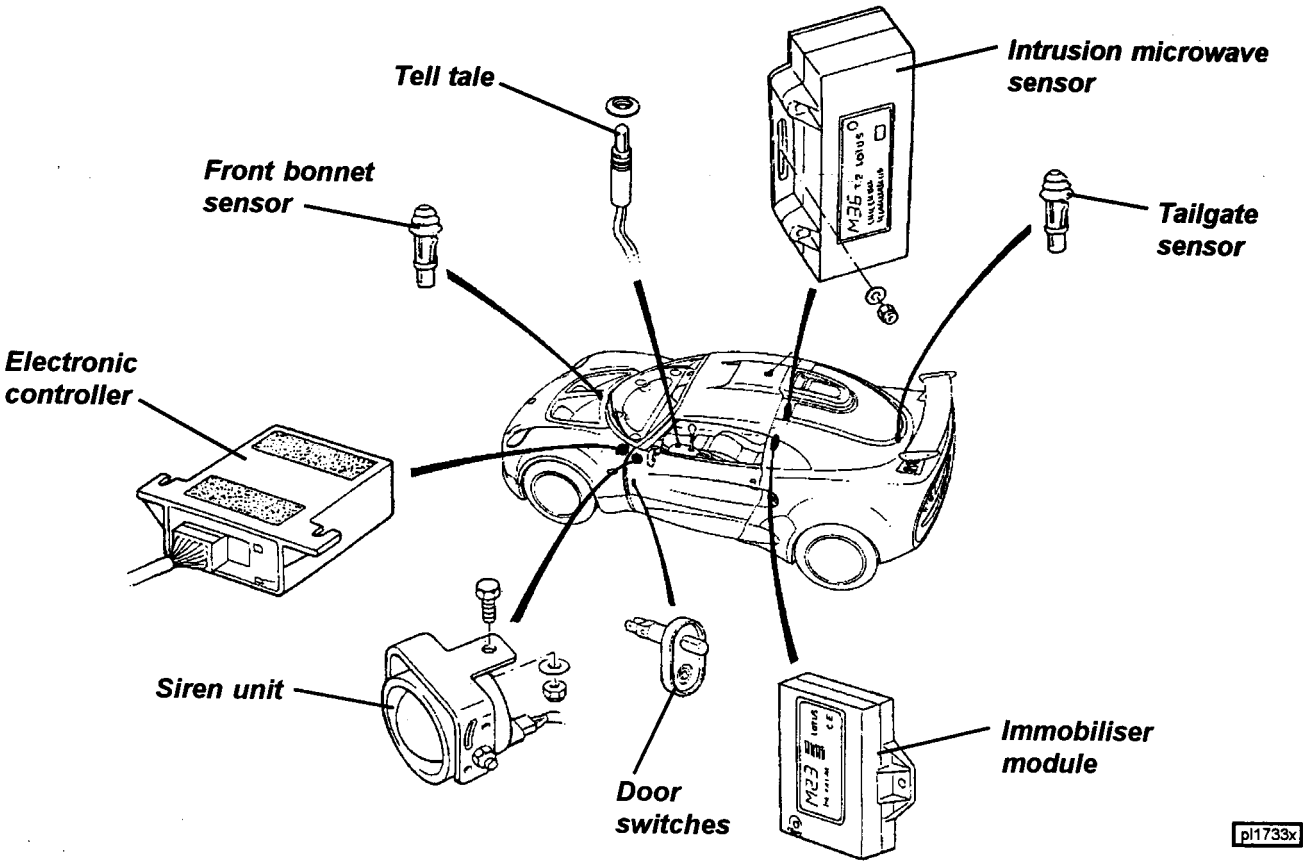

AUDIO EQUIPMENT

All cars are fitted with a standard Elise amplifier type aerial mounted on the roof air duct, and wired to a connector plug behind the fascia. The factory option of an audio fitting kit comprises a pair of speakers mounted in the rear bulkhead, and wired to a 16 pin ISO connector behind the fascia. Cars built without this option, retain the speaker wiring, but have blanking panels in place of speakers. Due to packaging restraints, Exige speakers are smaller than those in the Elise, and are common with Esprit fascia speakers, with 100mm diameter, 50W peak, 15W RMS.

Fuses & Relays

The main fusebox is located in the front services compartment, on the passenger side, and is protected by a clear plastic cover. Twenty two slots are provided for 'Littel' type fuses, which are numbered and coloured according to their amperage rating, and may be pulled out from their slots using the fuse extractor tool provided on the fusebox lid.

A relay block adjacent to the fusebox houses four relays, protected by a clip-on cover.

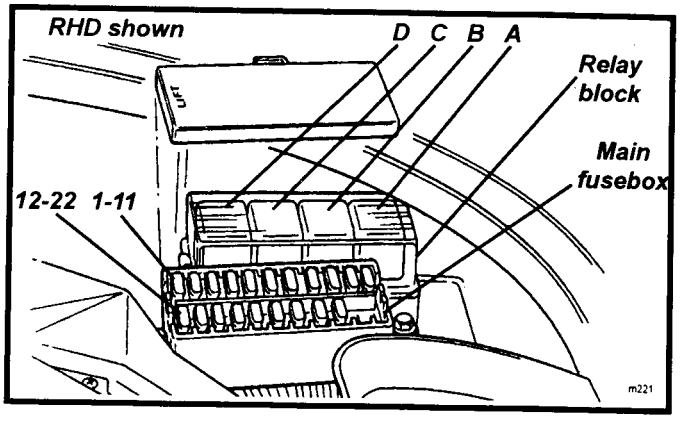

Fuses

Slot	Rating	Circuit
1	3A	Rear fog lamp
2	2A	Alarm ignition
3	20A	Interior fan
4	15A	Wiper motor
5	3A	Reverse lamp
6	7.5A	Direction ind.
7	10A	Ignition services
8	7.5A	Stop lamps & battery services
9	10A	Hazard lamps
10	7.5A	Horn
11	10A	Alarm & Int. lamp
12	25A	Cooling fan
13		-
14	20A	Audio
15	20A	Cigar lighter
16	5A	Sidelamp LH
17	5A	Sidelamp RH
18		-
19		-
20	20A	Fast fan speed relay
21		-
22		-

Relays

A	Horn	C	Dip beam
B	Cooling fan	D	Main beam

Two Maxi fuses are located in the front services compartment, beneath the wiper motor protective cover.

Slot	Rating	Circuit
A	50A	Lighting
B	50A	Ign. switch

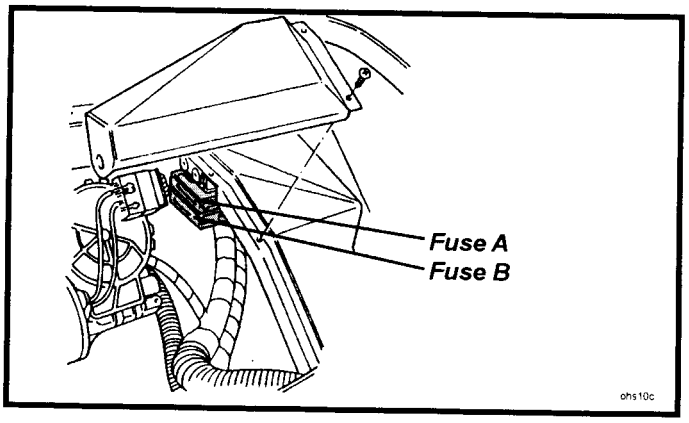

Engine management and security system related fuses, relays and modules are contained within the electronics box on the cabin rear bulkhead. A pull off panel is provided for ready access.

Bulkhead Electronics Box

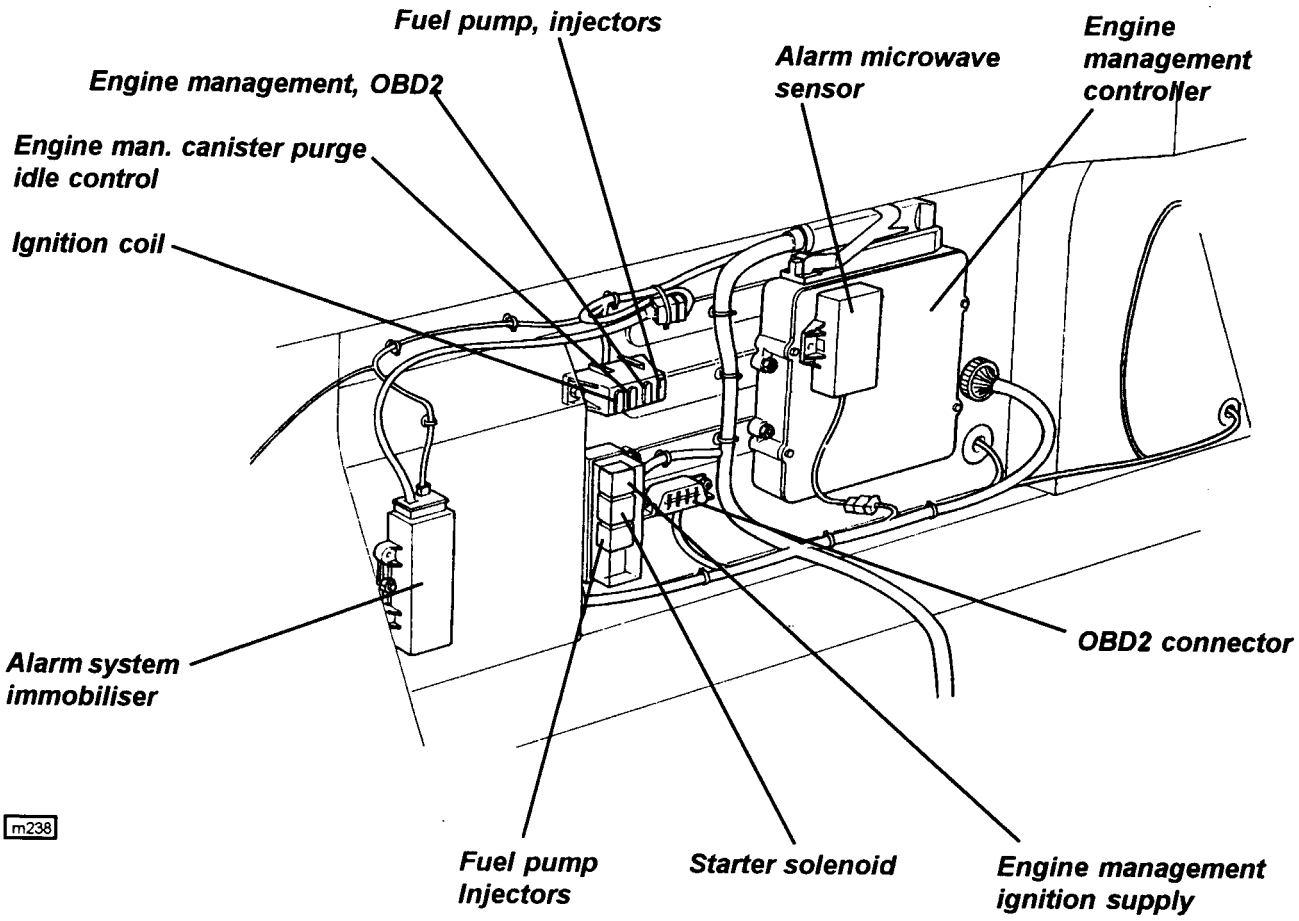

Engine bay harness routing

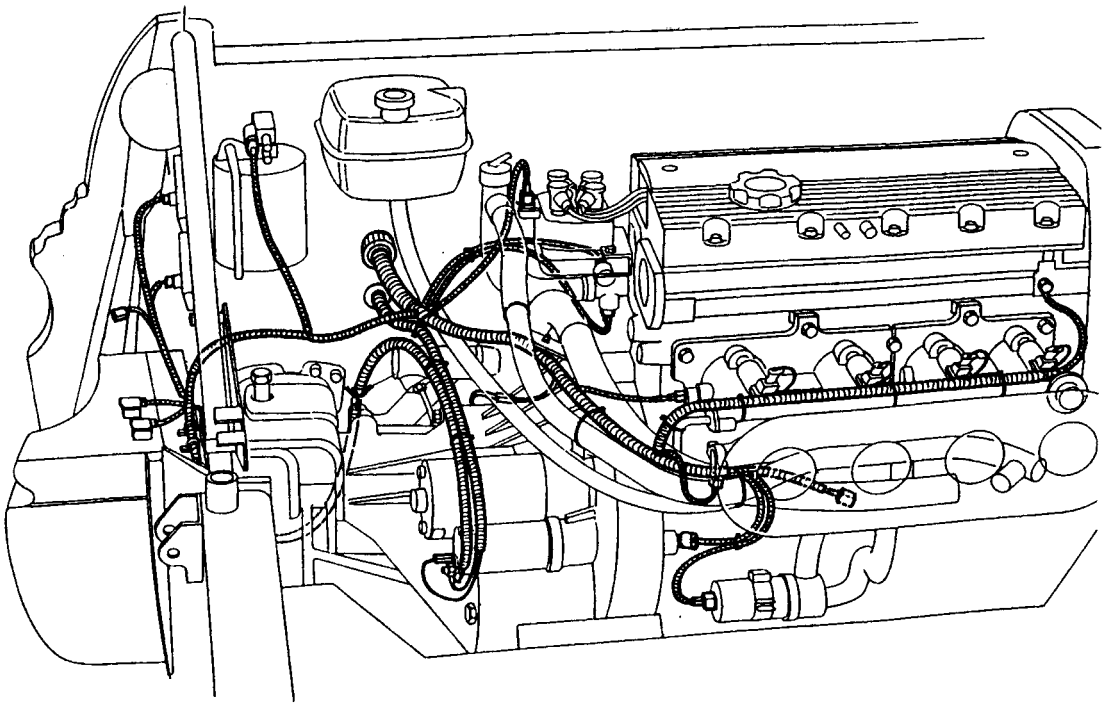

EXIGE CIRCUIT DIAGRAM INDEX

Circuit	Sheet
Starter, Alternator, Ignition	1
Fuel Pump, Ignition Coil	2
Radiator Fan, ECM Control	3
ECM Power Supply, Sensors	4
Wiper Motor	5
Turn Indicators, Hazard Lamps	6
Radio & Cigar Lighter	7
Instrument Pack	8
Meta Immobiliser	9
Meta Alarm	10
Headlamps	11
Sidelights	12
Horn	13
Rear Fog, Reverse, Brake Lamps	14
Interior Fan	15

GLOSSARY OF TERMS

Abbreviation	Expansion	Location
IMHC	IMmobiliser Harness Connector	Rear electrical box
BULK	BULKhead 48-way circular connector	Rear electrical box
FTHC	Fuel Tank Harness Connector	Rear electrical box
FTU	Fuel Tank Unit connector	Top of tank, left side
AHC	Alarm Harness Connector	Behind battery
OP CONN	OPtion CONNector	Rear electrical box
FHC	Front Harness Connector 1 & 2	Front compartment, right side
CHMSL HC	Central High Mounted Stop Lamp Harn. Conn.	Engine bay, left side
FOG HC	FOG lamp Harness Connector	Rear clamshell
HDL HC	HeaDLamp Harness Connector	Behind light pod
RHC	Rear Harness Connector	Rear compartment, left side

EXIGE START/ALTERNATOR/IGNITION

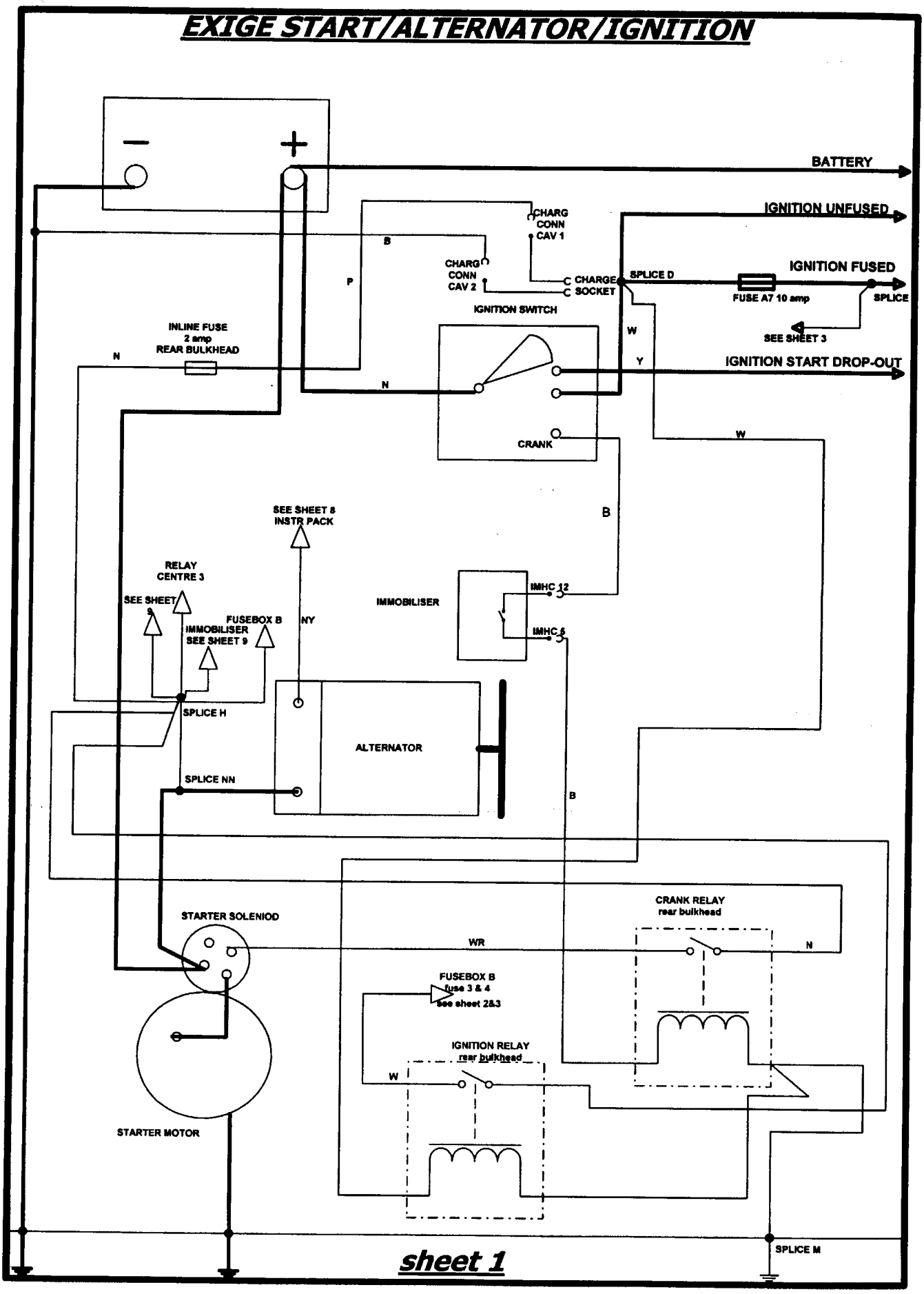

EXIGE FUEL PUMP AND COIL

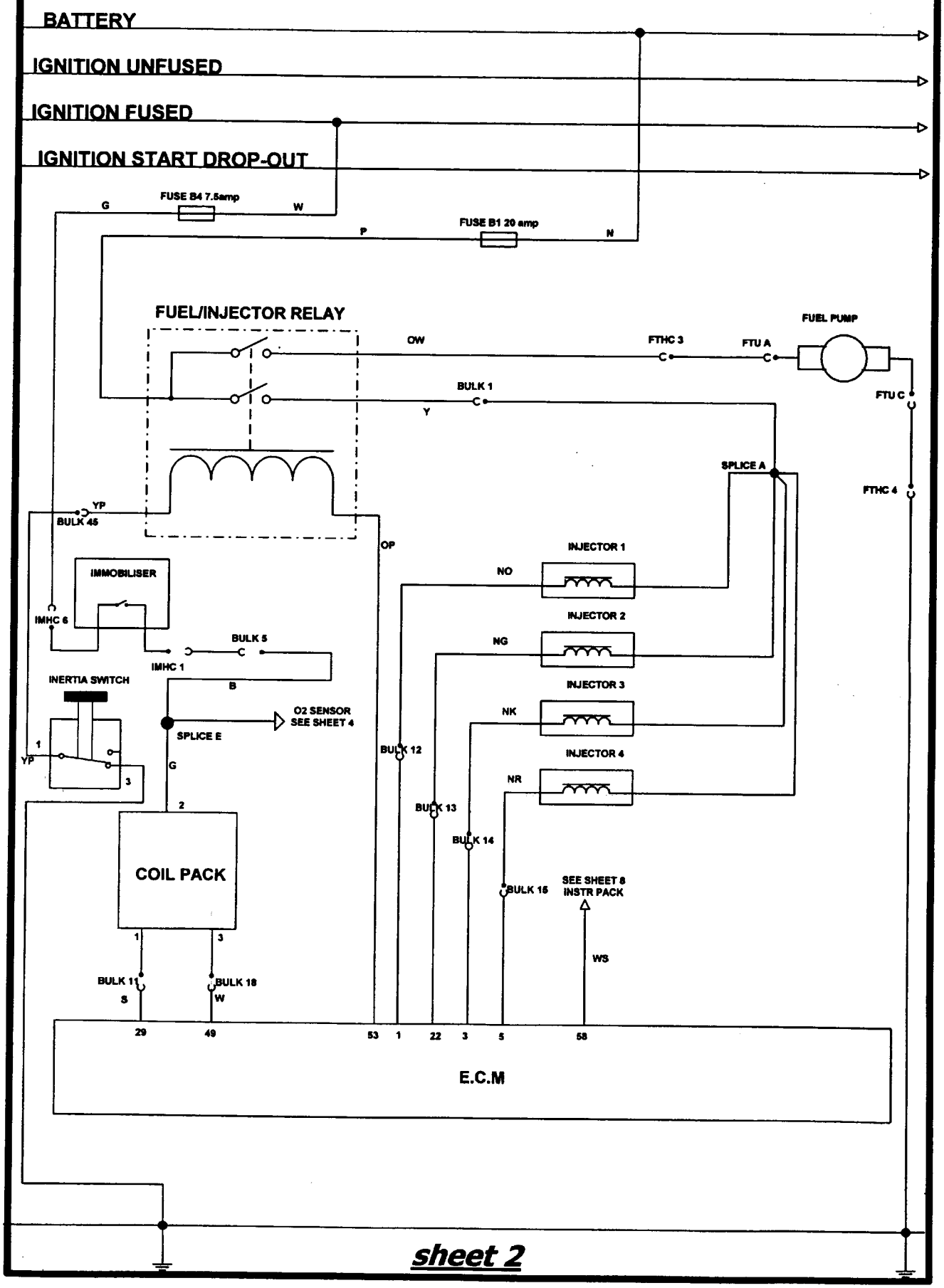

sheet 2

EXIGE COOLING FAN + ECM CONTROL

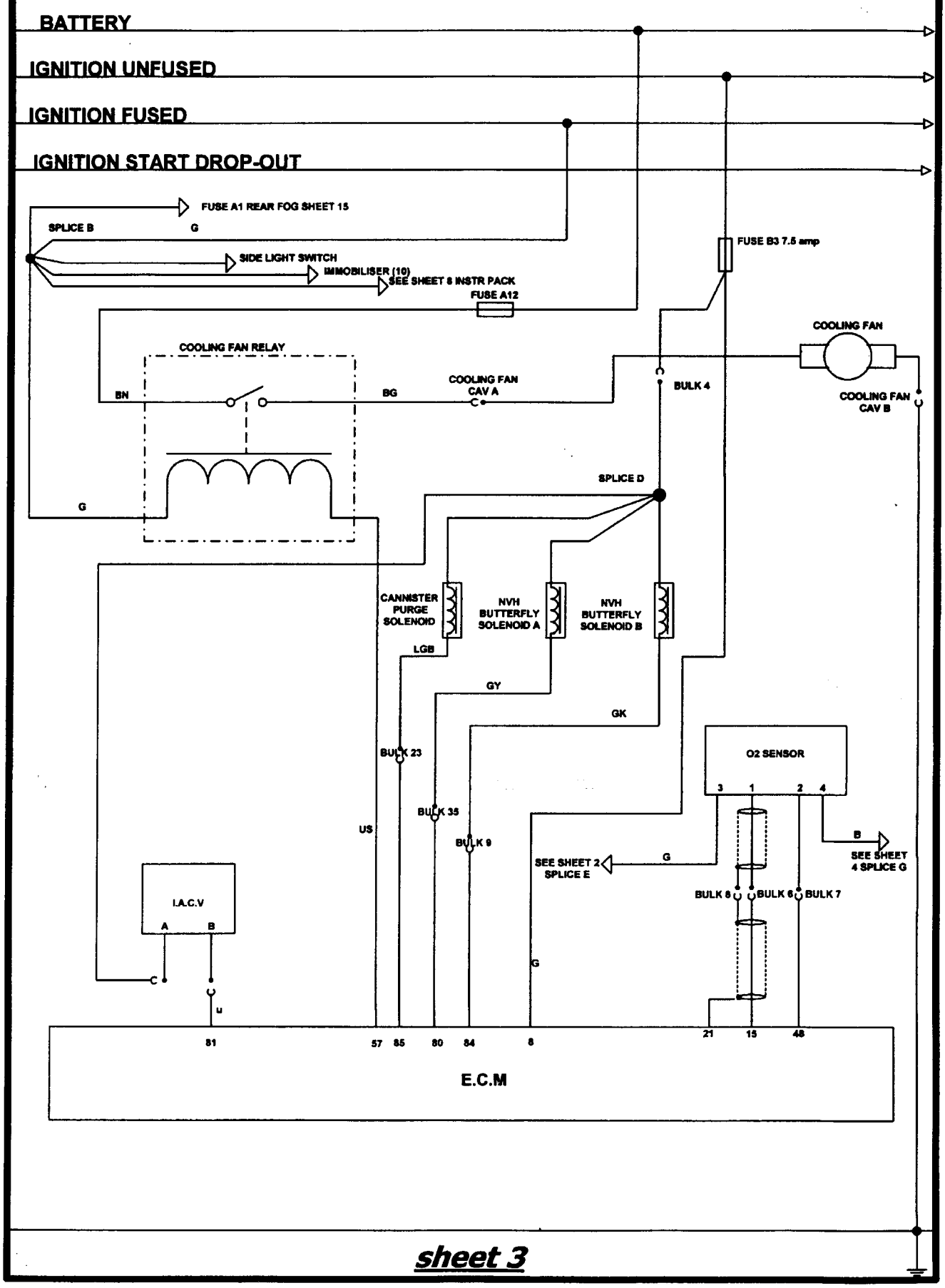

sheet 3

EXIGE ECM SENSORS + POWER

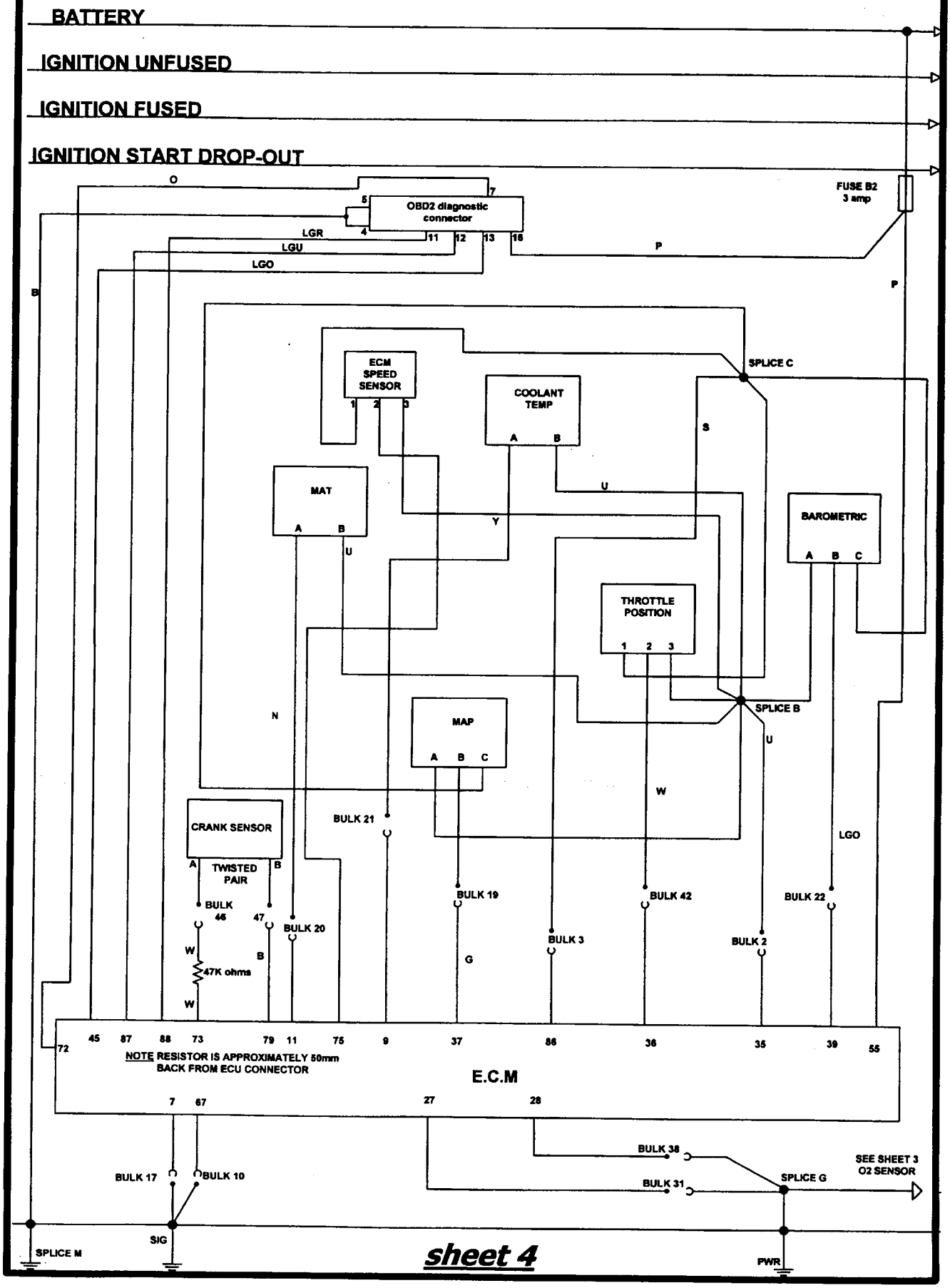

EXIGE WIPER MOTOR

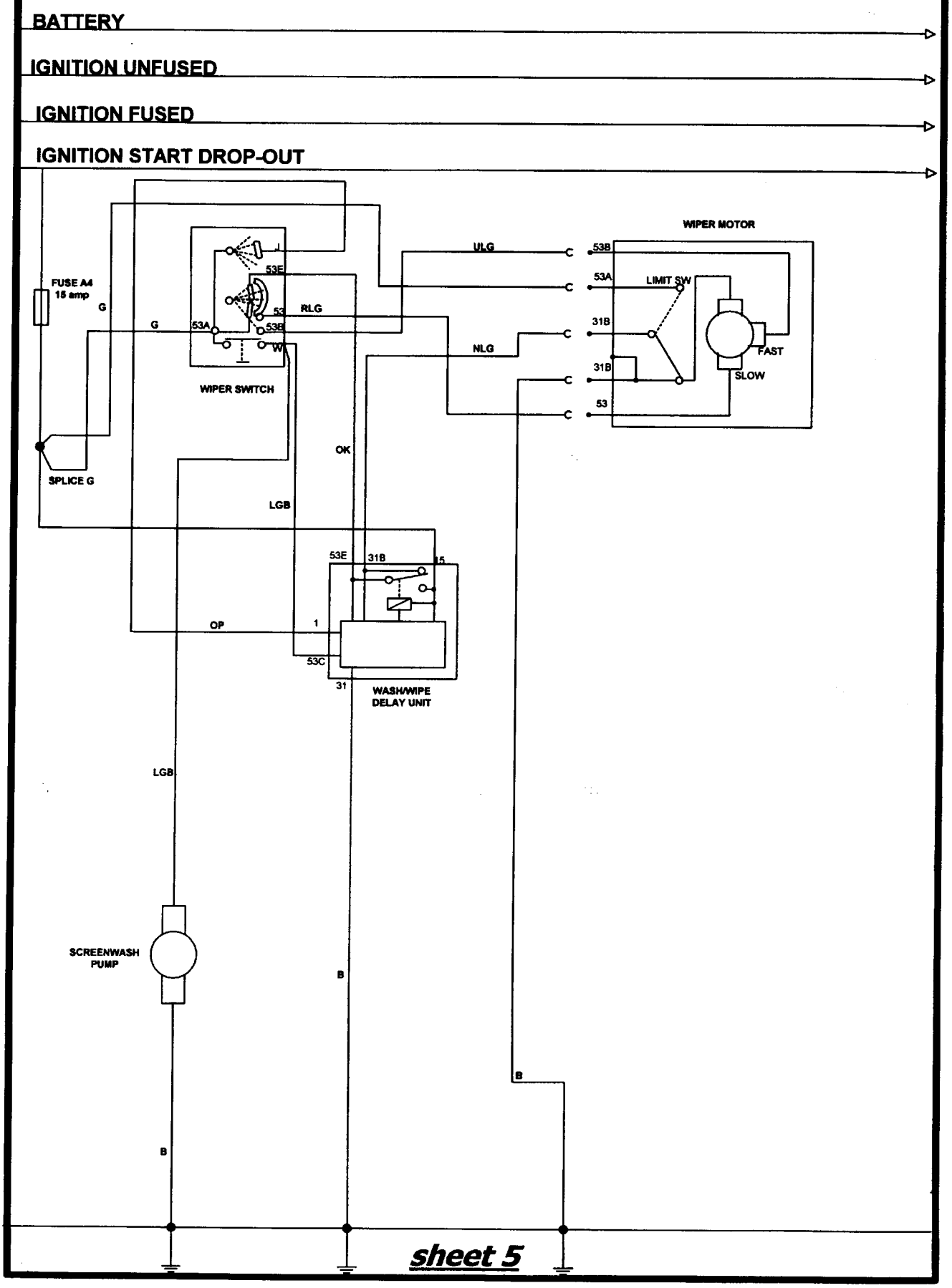

sheet 5

EXIGE INDICATOR/HAZARD LAMPS

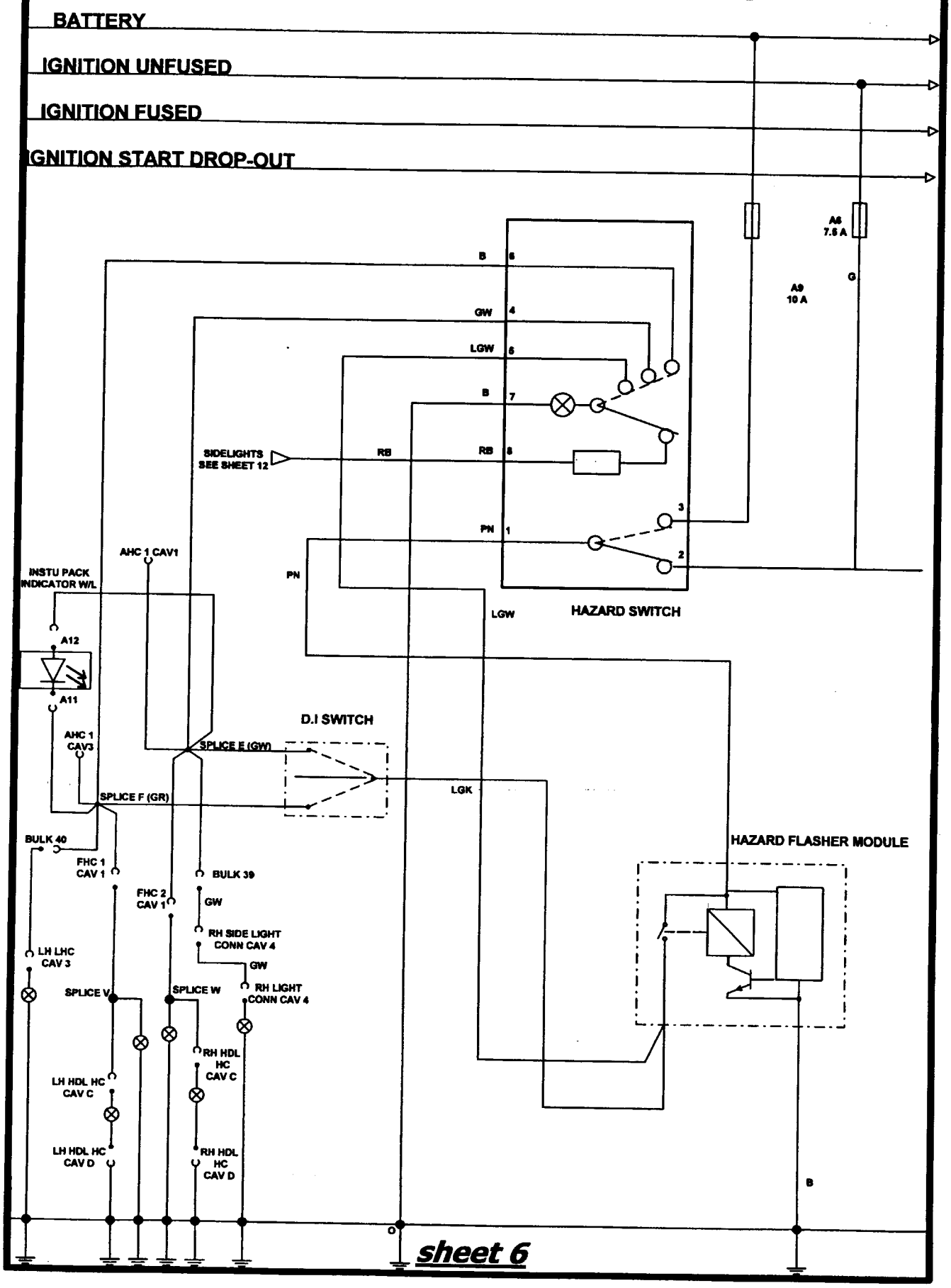

EXIGE RADIO AND CIGAR LIGHTER CIRCUIT

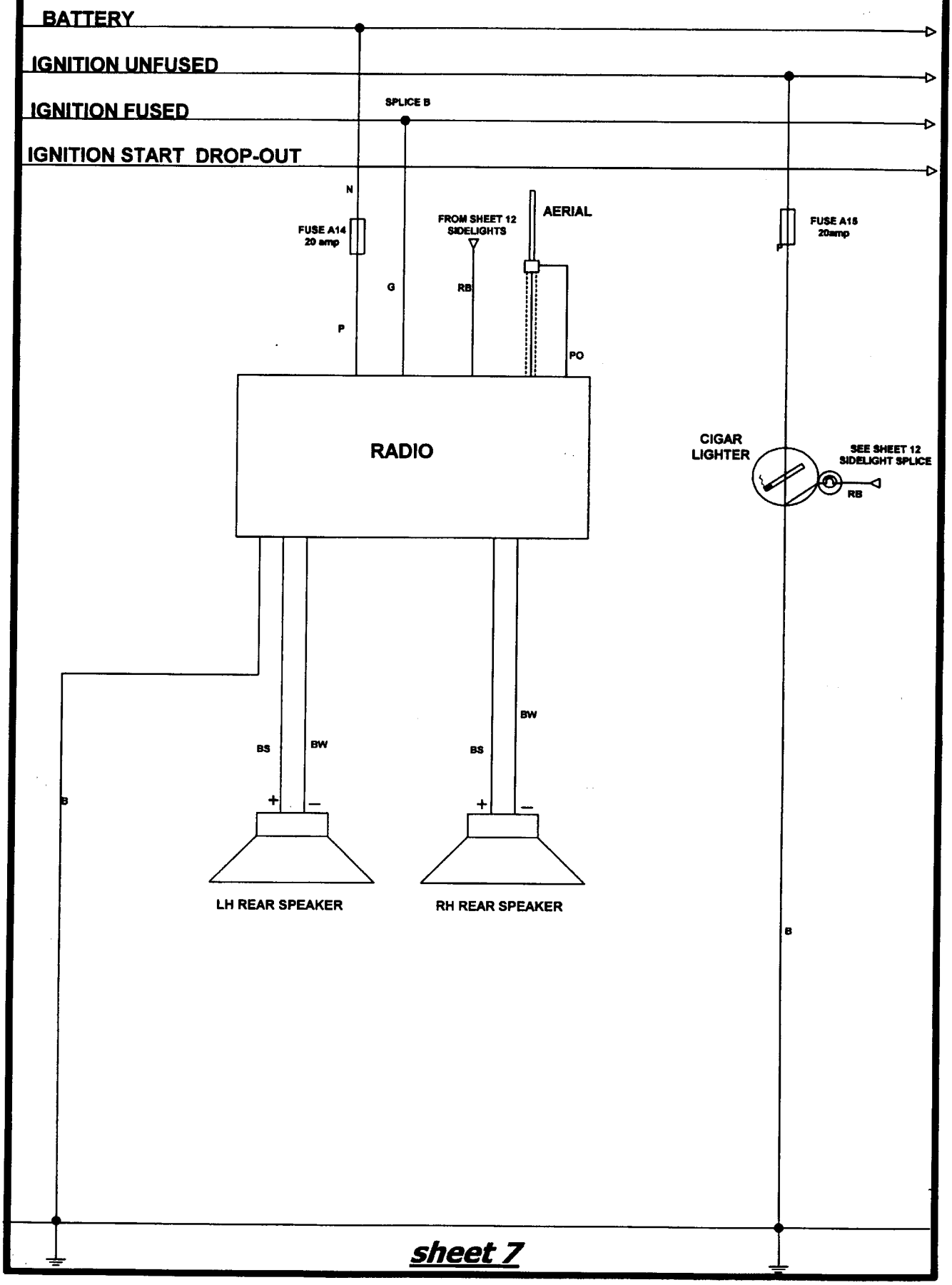

EXIGE INSTRUMENT PACK CIRCUIT

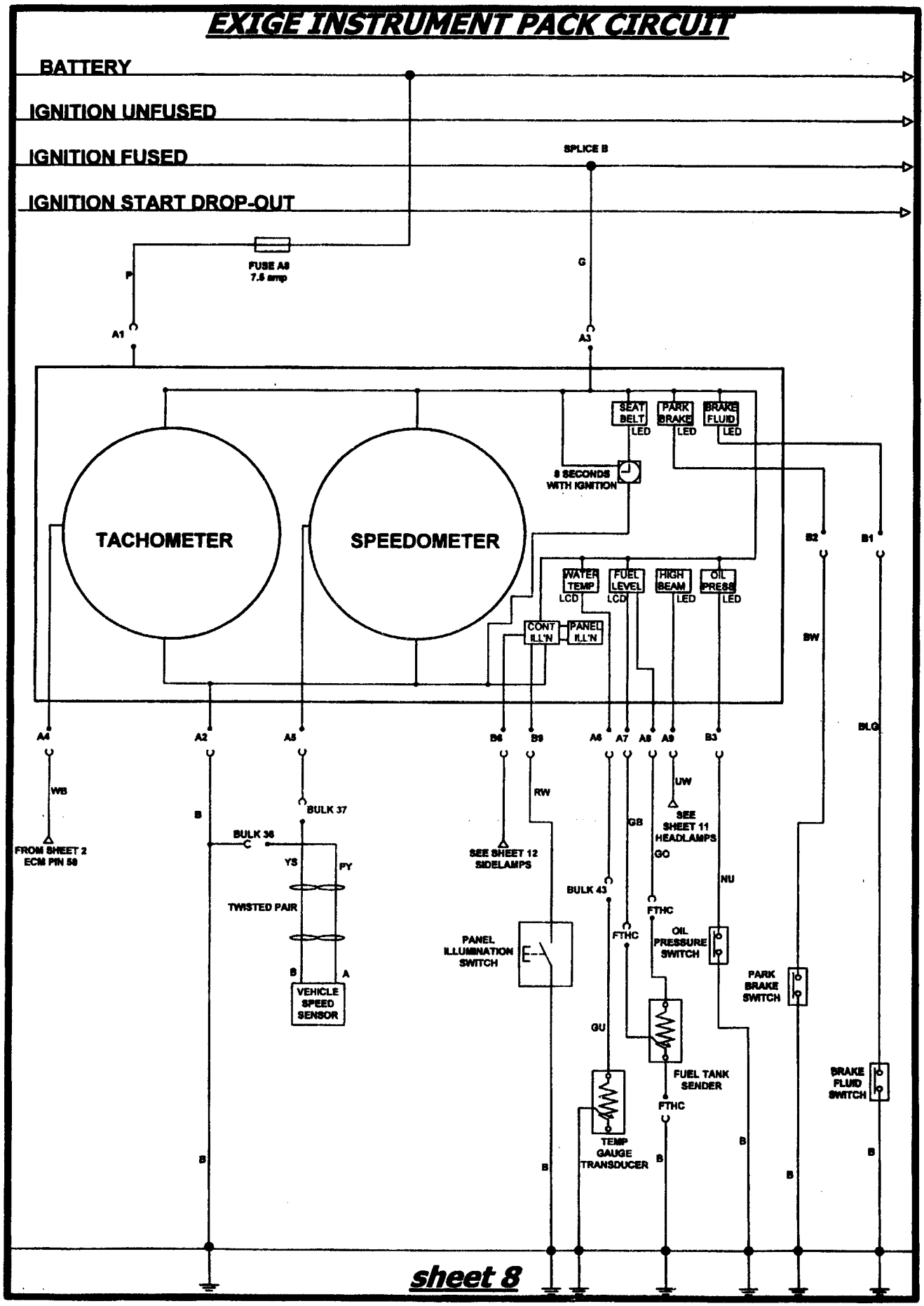

EXIGE IMMOBILISER

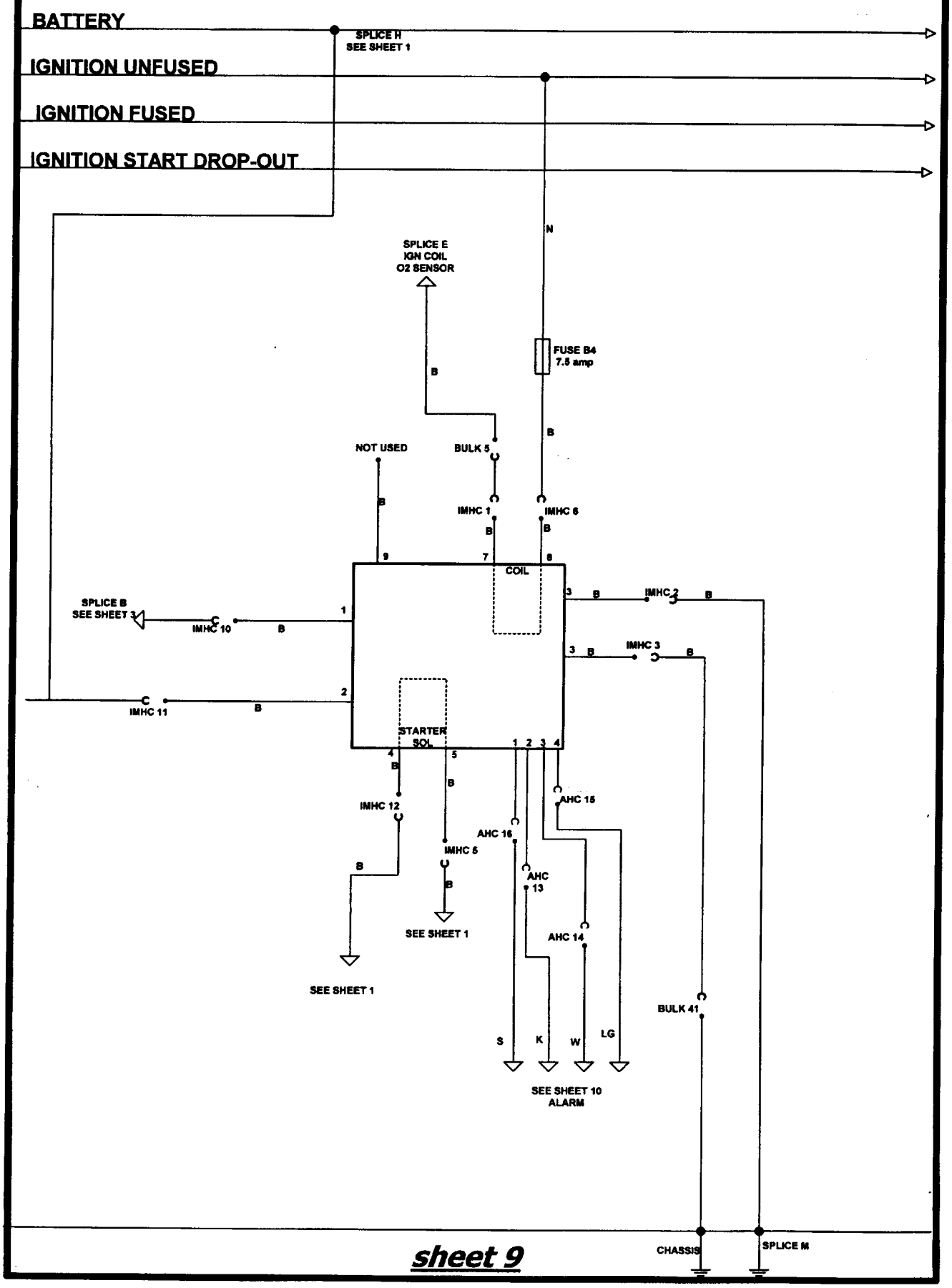

sheet 9

EXIGE HEADLAMP CIRCUIT

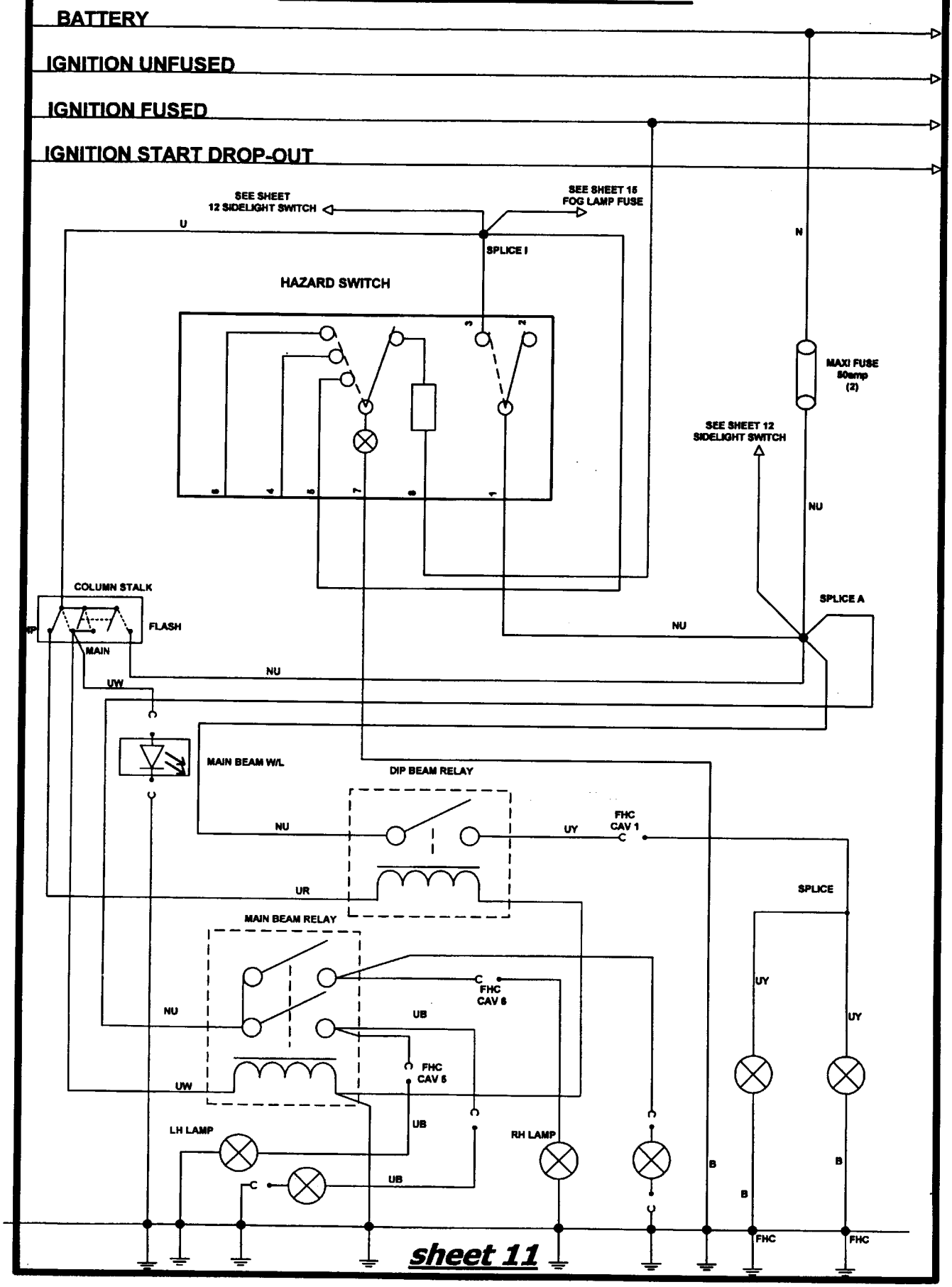

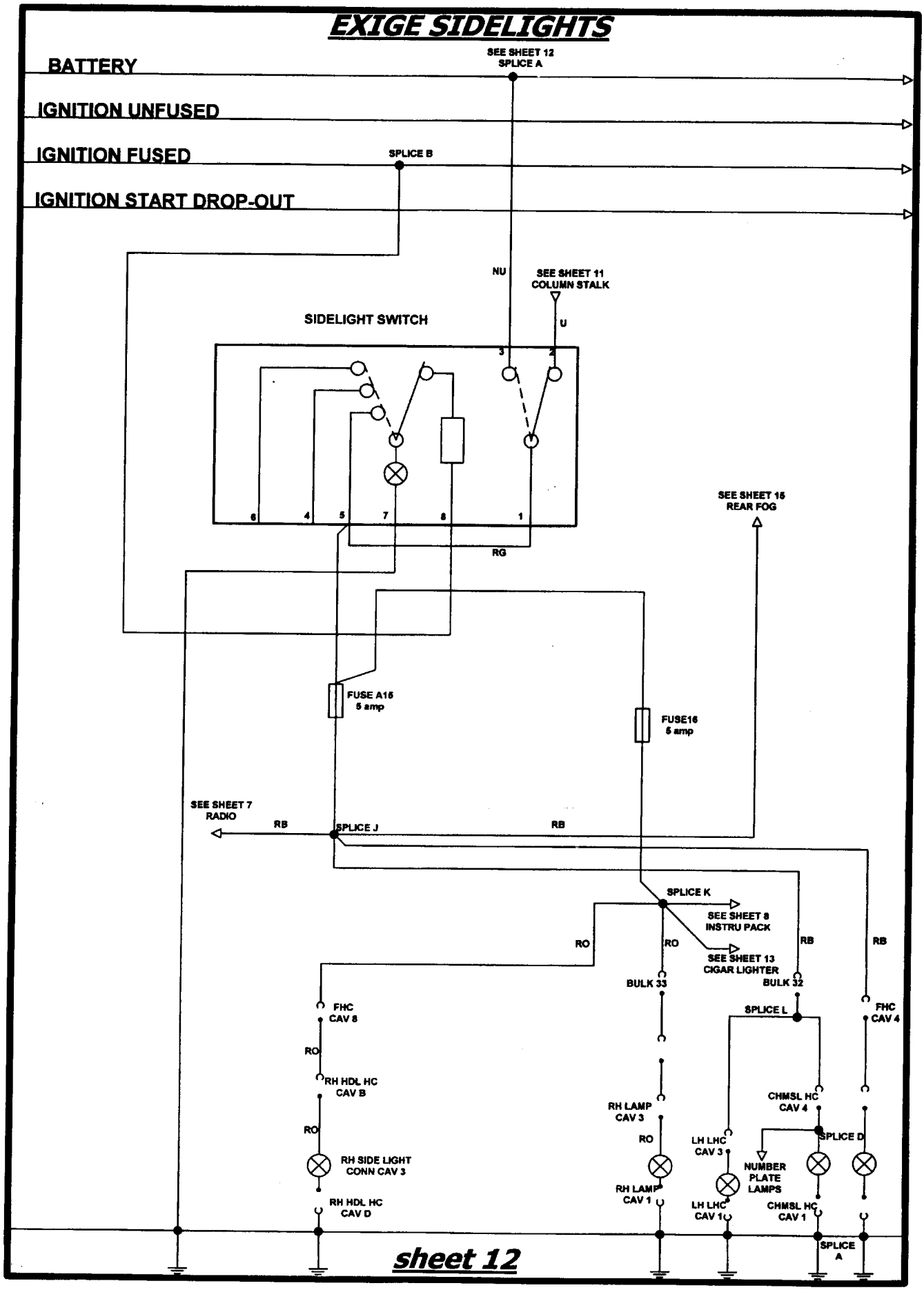
EXIGE SIDELIGHTS
BATTERY
SEE SHEET 12
SPLICE A
IGNITION UNFUSED
IGNITION FUSED
SPLICE B
IGNITION START DROP-OUT
NU
SEE SHEET 11
COLUMN STALK
U
SIDELIGHT SWITCH
3
2
6
4
5
7
8
1
RG
SEE SHEET 15
REAR FOG
FUSE A15
5 amp
FUSE16
5 amp
SEE SHEET 7
RADIO
RB
SPLICE J
RB
SPLICE K
SEE SHEET 8
INSTRU PACK
SEE SHEET 13
CIGAR LIGHTER
RO
RO
RB
RB
BULK 33
BULK 32
FHC
CAV 8
SPLICE L
FHC
CAV 4
RO
RH HDL HC
CAV B
RH LAMP
CAV 3
CHMSL HC
CAV 4
RO
RO
LH LHC
CAV 3
SPLICE D
RH SIDE LIGHT
CONN CAV 3
NUMBER
PLATE
LAMPS
RH LAMP
CAV 1
LH LHC
CAV 1
CHMSL HC
CAV 1
RH HDL HC
CAV D
SPLICE
A
sheet 12

EXIGE HORN CIRCUIT

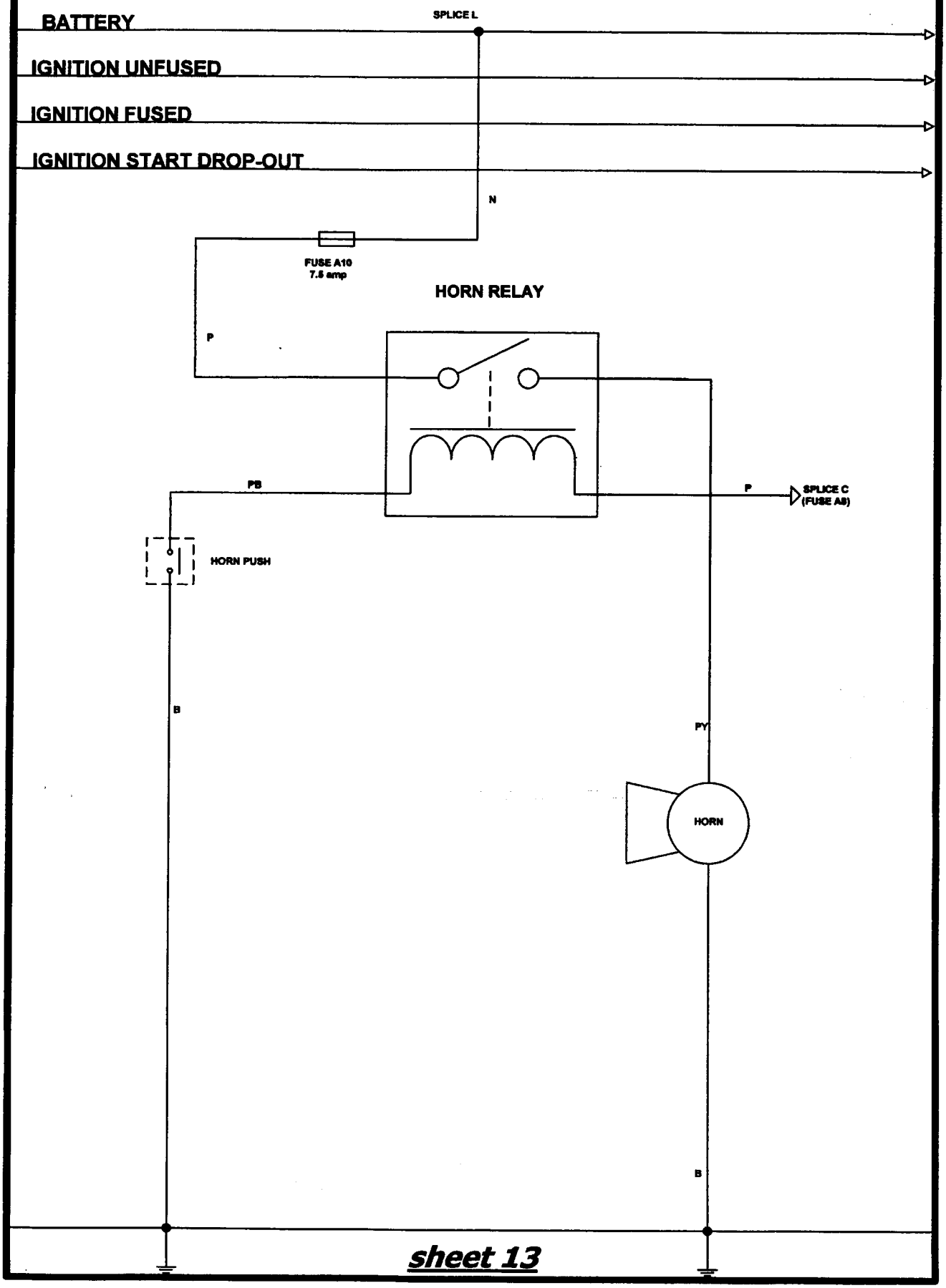

sheet 13

EXIGE REAR FOG/REVERSE AND BRAKE LAMPS

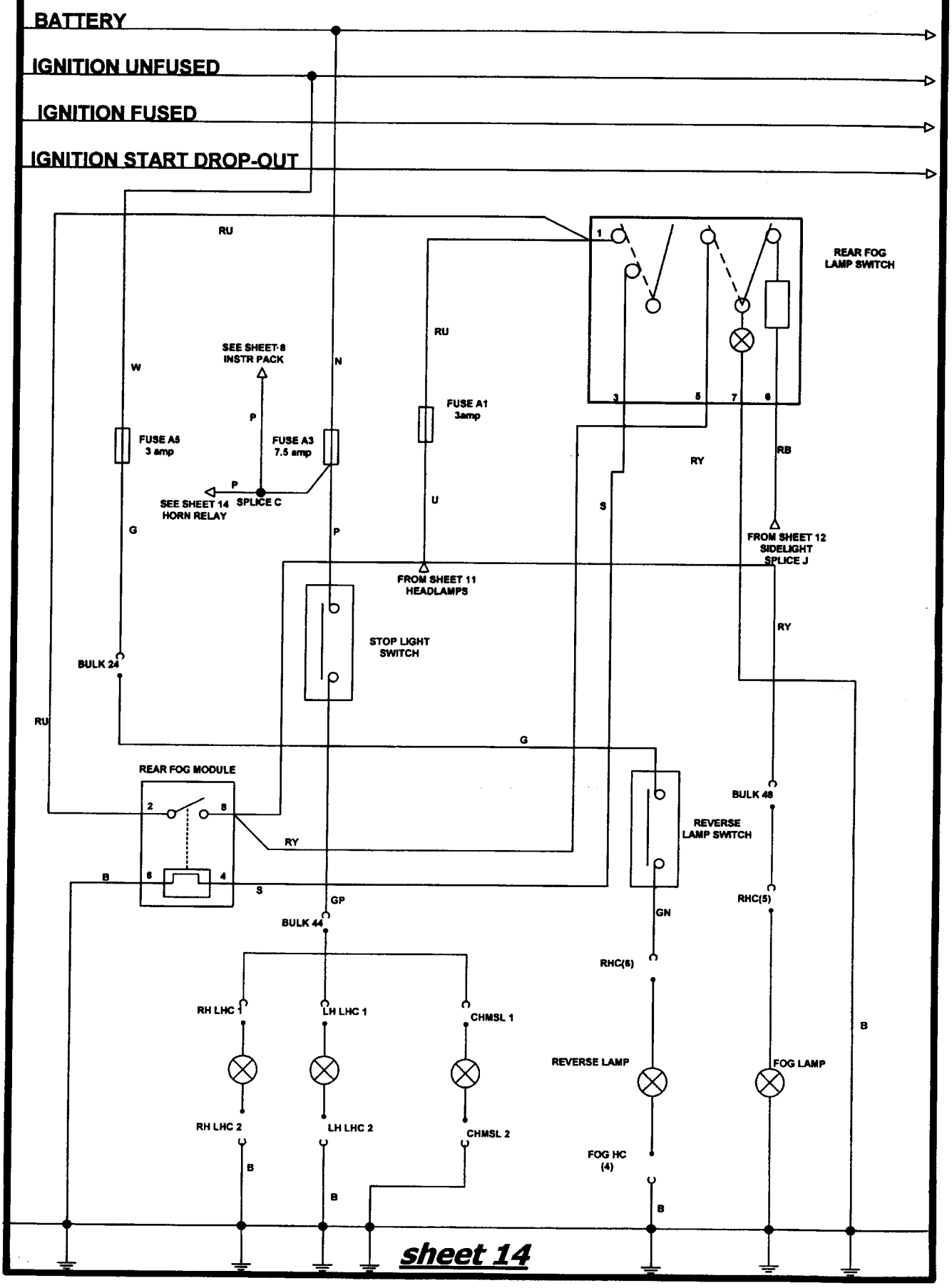

EXIGE INTERIOR FAN CIRCUIT

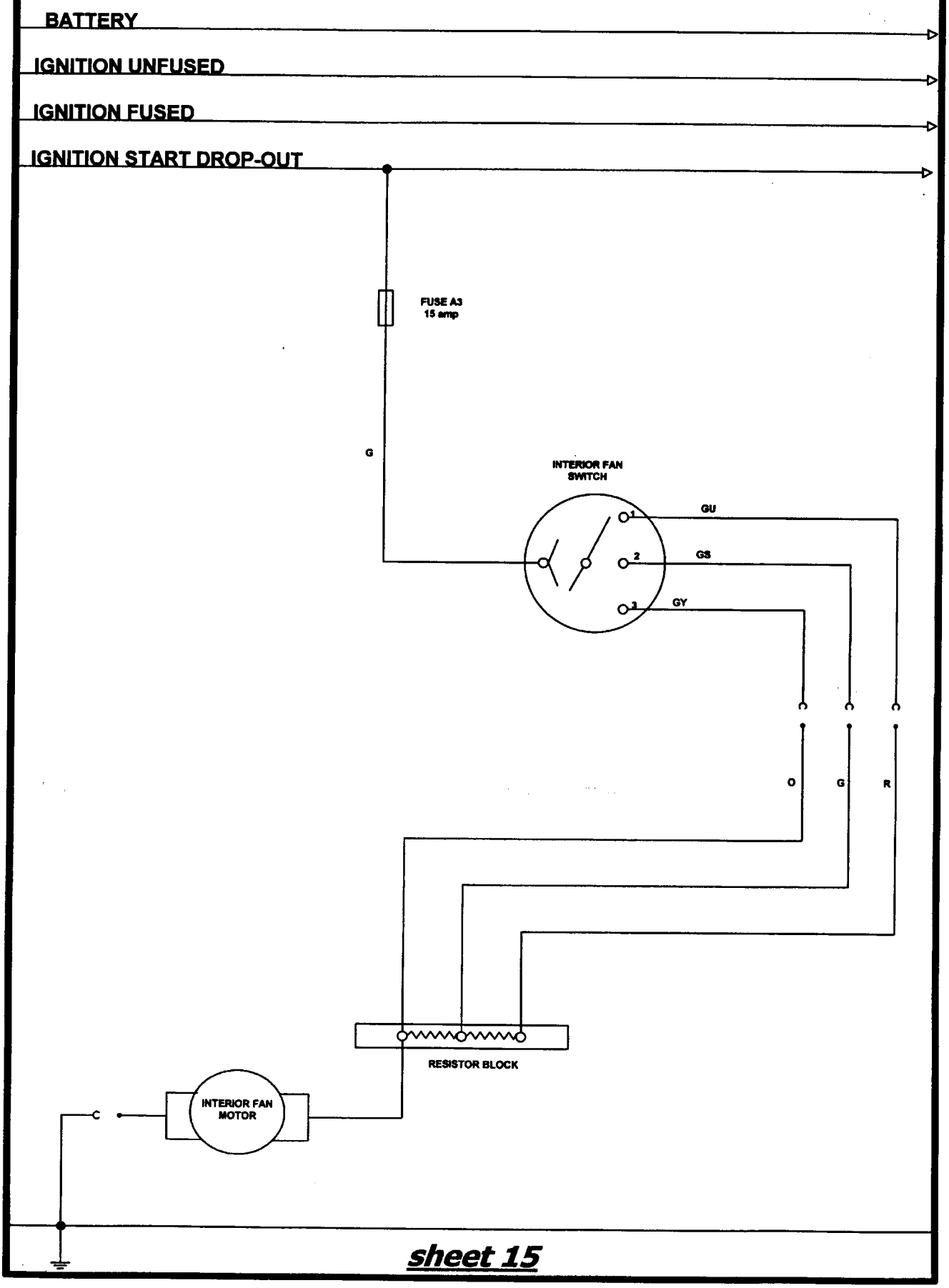

sheet 15

EXIGE.O - MAINTENANCE & LUBRICATION

The service interval for standard Elise and Elise 111S models is 9,000 miles (15,000 km). For 340R, Sport 160 and Exige models, the interval is 6,000 miles (10,000 km). Maintenance Schedule LSL348 has been updated to 'D' level to include the Exige.

EXIGE.P - HEATING & VENTILATION

As standard Elise.

EXIGE.Q - CLUTCH

As standard Elise.